ZEPHYR

ZEPHYRONLINE.COM

	INTERNAL BLOWER STANDARD	INTERNAL BLOWER with ACT™ AIRFLOW CONTROL TECHNOLOGY™*		
SINGLE BLOWER (INCLUDED) Min. - Max. CFM	200 - 700	200 - 590	200 - 390	200 - 290
SINGLE BLOWER (INCLUDED) Min. - Max. Sones	0.8 - 6			
DUAL BLOWER (OPTIONAL) Min. - Max. CFM	300 - 1,300			
DUAL BLOWER (OPTIONAL) Min. - Max. Sones	1 - 8			

*AIRFLOW CONTROL TECHNOLOGY™ (ACT™) is an exclusive feature built into specific Zephyr hoods which can limit the maximum blower CFM to meet local code requirements.





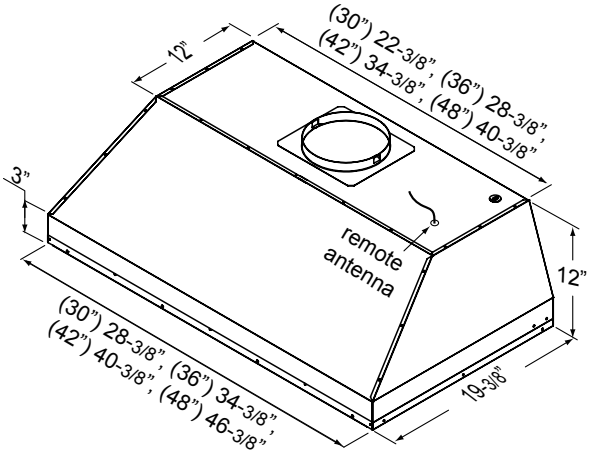

3/4 VIEW

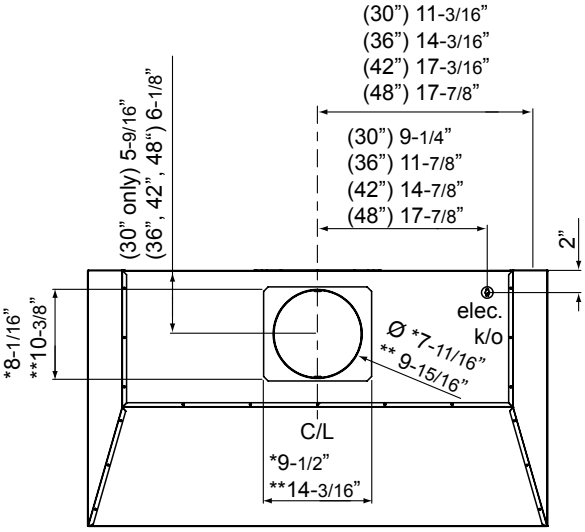

TOP

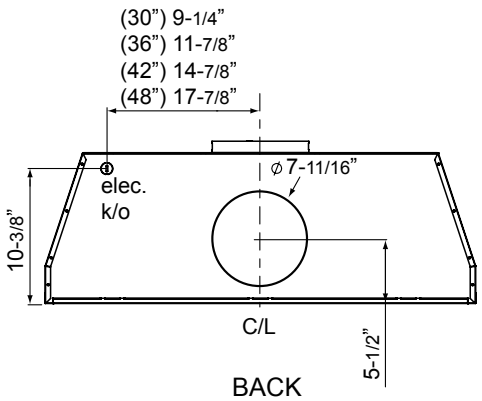

BACK

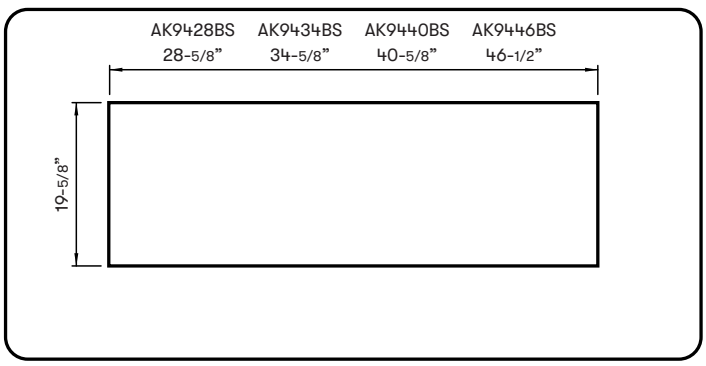

Cabinet Bottom Cut-Out Size (W x D): 28-5/8" x 19-5/8" (AK9428BS), 34-5/8" x 19-5/8" (AK9434BS), 40-5/8" x 19-5/8" (AK9440BS), 46-1/2" x 19-5/8" (AK9446BS)

* 8" round ducting
** 10" round ducting

ZEPHYR

ZEPHYRONLINE.COM

MODEL				
Stainless Steel	AK9428BS	AK9434BS	AK9440BS	AK9446BS
Size	30" (28-3/8" x 19-3/8")	36" (34-3/8" x 19-3/8")	42" (40-3/8" x 19-3/8")	48" (46-3/8" x 19-3/8")
BLOWER PERFORMANCE				
Included Blower CFM (Min. - Max.)	200 - 700	200 - 700	200 - 700	200 - 700
Sones (Min. - Max.)	0.8 - 6	0.8 - 6	0.8 - 6	0.8 - 6
ACT 590 CFM (Min. - Max.)	200 - 590	200 - 590	200 - 590	200 - 590
ACT 390 CFM (Min. - Max.)	200 - 390	200 - 390	200 - 390	200 - 390
ACT 290 CFM (Min. - Max.)	200 - 290	200 - 290	200 - 290	200 - 290
Optional Dual Blower (Min. - Max.)	NA	300 - 1,300, 1-8 Sones	300 - 1,300, 1-8 Sones	300 - 1,300, 1-8 Sones
FEATURES				
ACT™ Technology	590, 390, 290	590, 390, 290	590, 390, 290	590, 390, 290
	Single Blower Only	Single Blower Only	Single Blower Only	Single Blower Only
Controls	Proximity Touch	Proximity Touch	Proximity Touch	Proximity Touch
Speed Levels	6*	6*	6*	6*
Auto Delay-Off	Yes	Yes	Yes	Yes
CleanAir Function	Yes	Yes	Yes	Yes
Lighting	LumiLight LED, 6W x2	LumiLight LED, 6W x2	LumiLight LED, 6W x2	LumiLight LED, 6W x4
Tri-Level Lighting	Yes	Yes	Yes	Yes
Filters	Pro Baffle x2	Pro Baffle x2	Pro Baffle x2	Pro Baffle x3
Removable Grease Tray	Yes	Yes	Yes	Yes
Recirculating Option	No	No	No	No
ADA Compliant	Yes, with remote accessory	Yes, with remote accessory	Yes, with remote accessory	Yes, with remote accessory
DUCT SPECIFICATIONS				
Vertical Single Internal Blower	8" Round	8" Round	8" Round	8" Round
Horizontal Single Internal Blower	8" Round	8" Round	8" Round	8" Round
Vertical Dual Internal Blower	NA	10" Round	10" Round	10" Round
Horizontal Dual Internal Blower	NA	NA	NA	NA
AC POWER (Single Blower)	120V, 60Hz at Max. 5A	120V, 60Hz at Max. 5A	120V, 60Hz at Max. 5A	120V, 60Hz at Max. 5A
AC POWER (Dual Blower)	NA	120V, 60Hz at Max. 8A	120V, 60Hz at Max. 8A	120V, 60Hz at Max. 8A
OPTIONAL ACCESSORIES				
Wireless Remote Control	14000005	14000005	14000005	14000005
Dual Internal Blower	NA	PBD-1300B	PBD-1300B	PBD-1300B
Make-Up Air Kit (Single Blower)	MUA008A	MUA008A	MUA008A	MUA008A
Make-Up Air Kit (Dual Blower)	MUA010A	MUA010A	MUA010A	MUA010A
MOUNTING HEIGHT RANGE**	24" - 36"	24" - 36"	24" - 36"	24" - 36"
WARRANTY	3 years parts, 1 year labor	3 years parts, 1 year labor	3 years parts, 1 year labor	3 years parts, 1 year labor

*When ACT™ is enabled the maximum speed levels will change. ACT 590 CFM = 5 speeds, ACT 390 CFM = 4 speeds and ACT 290 CFM = 3 speeds.
**Mounting height refers to distance between top of a 36" tall cooking surface and bottom of hood.

ACT™

Airflow Control Technology™ (ACT™)
is an exclusive feature built into specific Zephyr hoods which can limit the maximum blower CFM to meet local code requirements.

PowerWave™

PowerWave™ 3-Phase Blower Technology
delivers best-in-class performance with unparalleled quiet operation. It provides more power while minimizing noise and improving efficiency.

Specifications subject to change, check zephyronline.com for up-to-date information.
Zephyr Ventilation | 2277 Harbor Bay Parkway, Alameda, CA 94502 | 888.880.VENT

OCT26.0101

c UL US LISTED