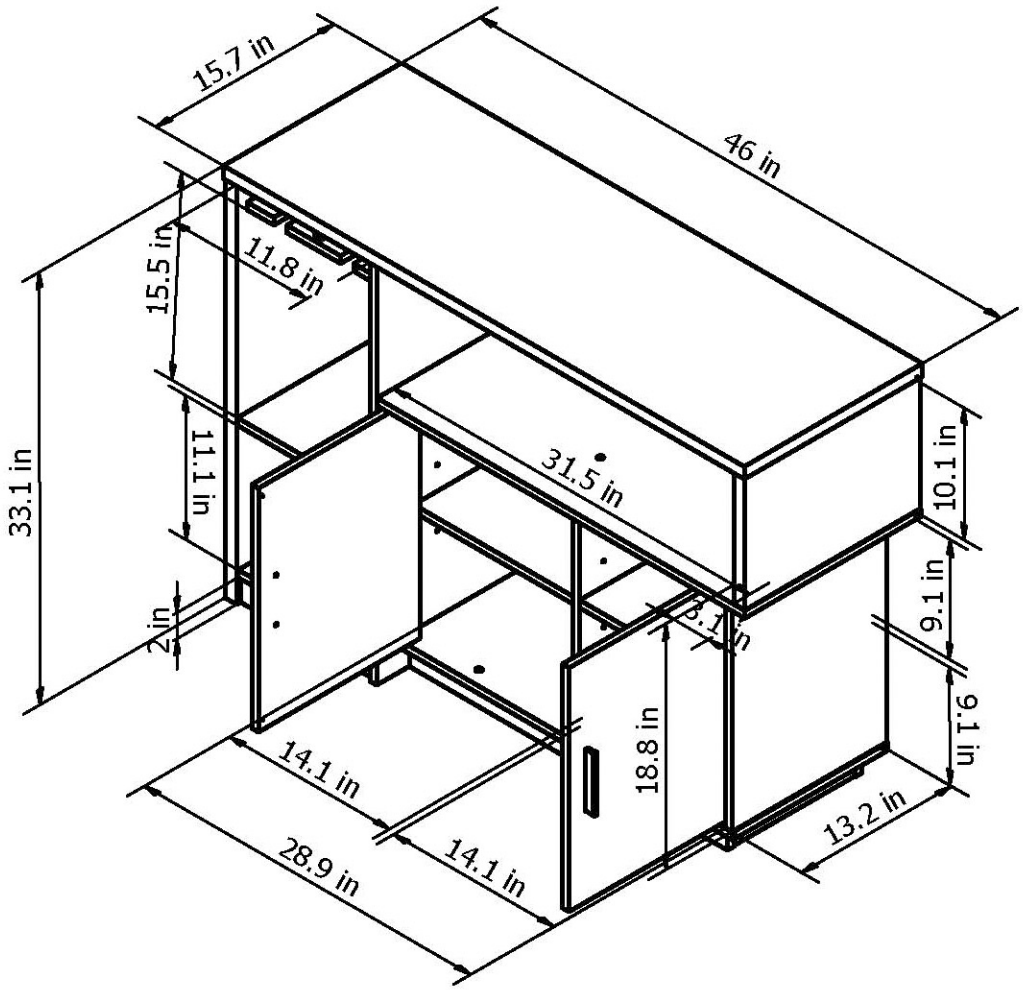
15.7 in
46 in
15.5 in
11.8 in
33.1 in
11.1 in
31.5 in
10.1 in
2 in
3.1 in
9.1 in
18.8 in
9.1 in
14.1 in
14.1 in
28.9 in
13.2 in

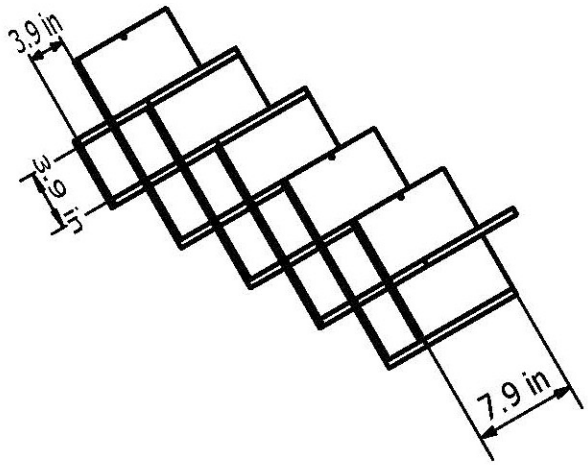
3.9 in
3.9 in
7.9 in