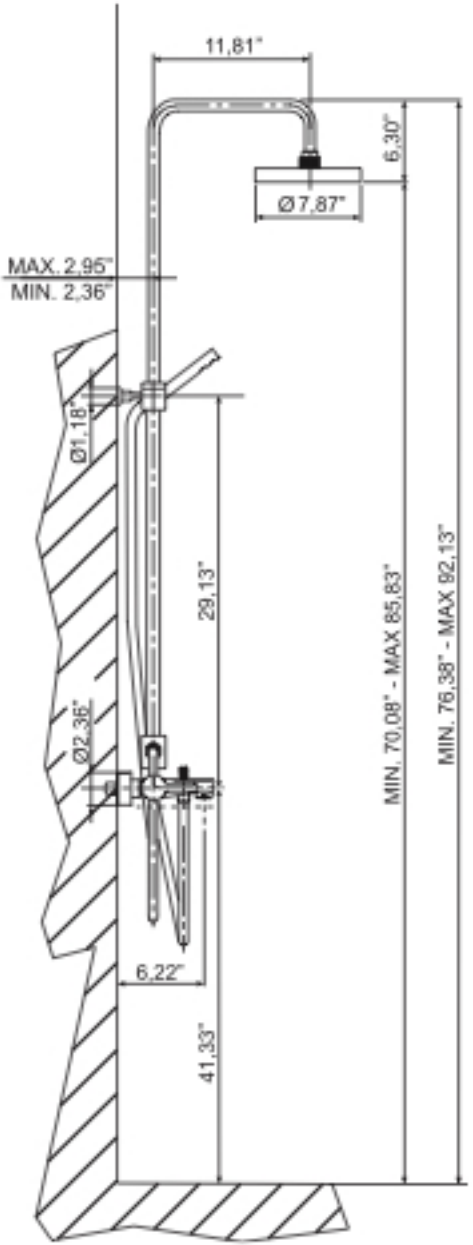
11,81"
6,30"
Ø7,87"
MAX. 2,95"
MIN. 2,36"
Ø1,18"
29,13"
Ø2,36"
MIN. 70,08" - MAX 85,83"
MIN. 76,38" - MAX 92,13"
6,22"
41,33"