Open Back 29" Barstool

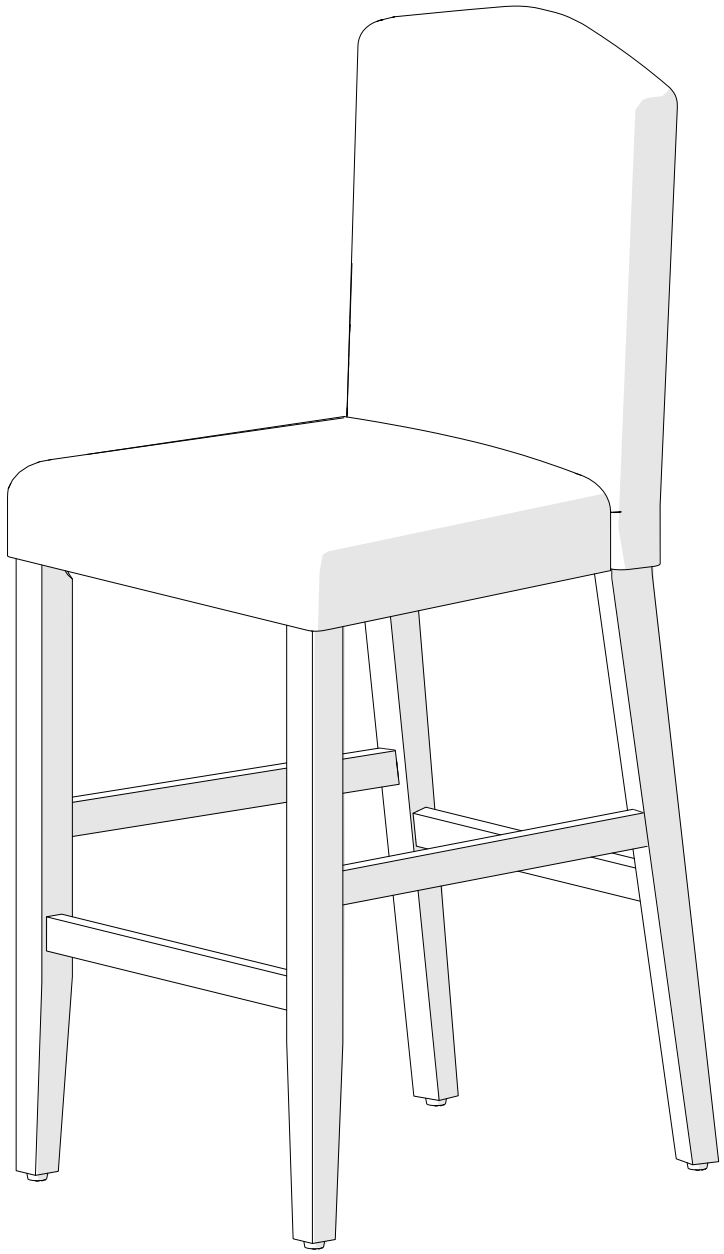

>>assembly instructions

Congratulations on your latest purchase.

Now what? Don’t start sweating over this box of parts. This will be easy. We did the hard work for you. All you need to do is follow our simple instructions and you’ll be on your way to transforming your room in no time. Good luck --though we’re confident you won’t need it.

before you begin

1. Check for damaged or missing parts. Customers can email or call us to order missing supplies.
2. Use the carton as a working surface to prevent product damage during assembly.
3. Gather all tools prior to assembly.

tools needed

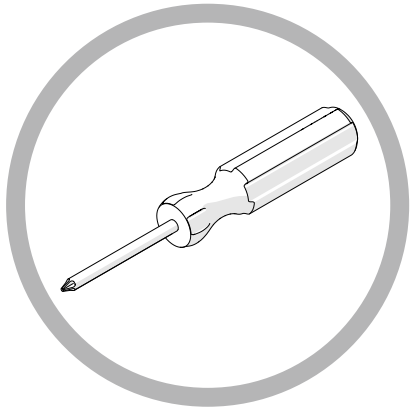

table of contents

introduction	2
hardware	4
parts list	5
assembly	6 - 11

hardware

(A) x 4

5/16" x 3-1/4"
round hex screw

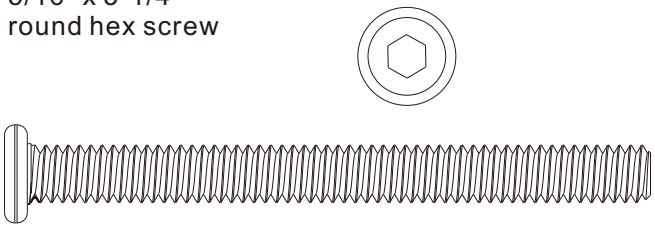

(B) x 2

5/16" x 2-1/4"
round hex screw

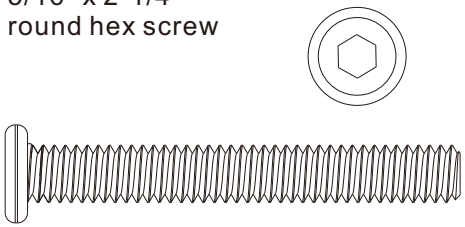

(C) x 4

5/16" x 2"
round hex screw

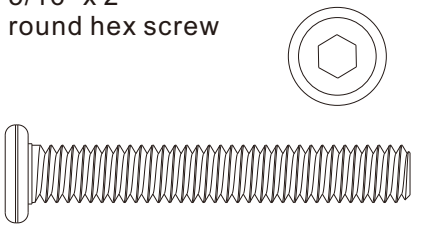

(D) x 4

Screw Flat head 50mm

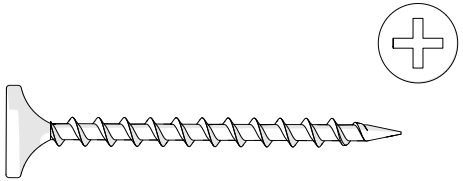

(E) x 10

5/16" lock washer



(F) x 10

7/8" flat washer

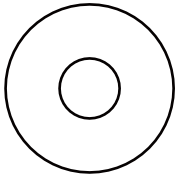

(G) x 1

5mm Ball end
Hex wrench

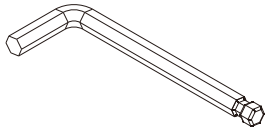

ITEM	DESCRIPTION	QUANTITY
1	chair back	1
2	seat cushion	1
3	front leg	1
4	right bar	1
5	left bar	1

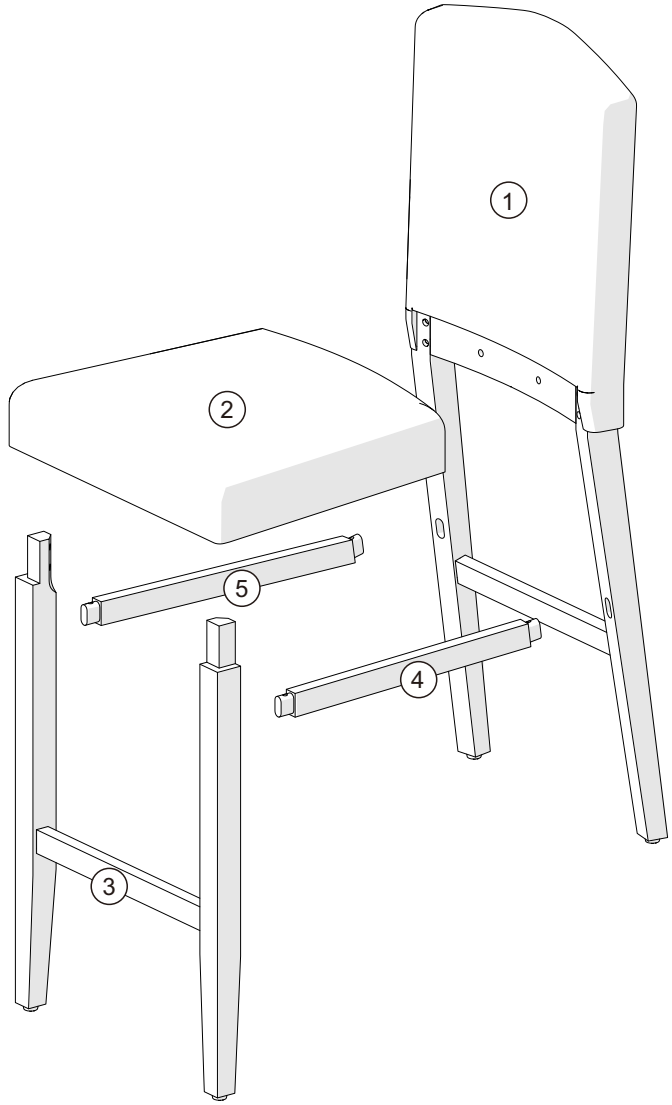

step 1.

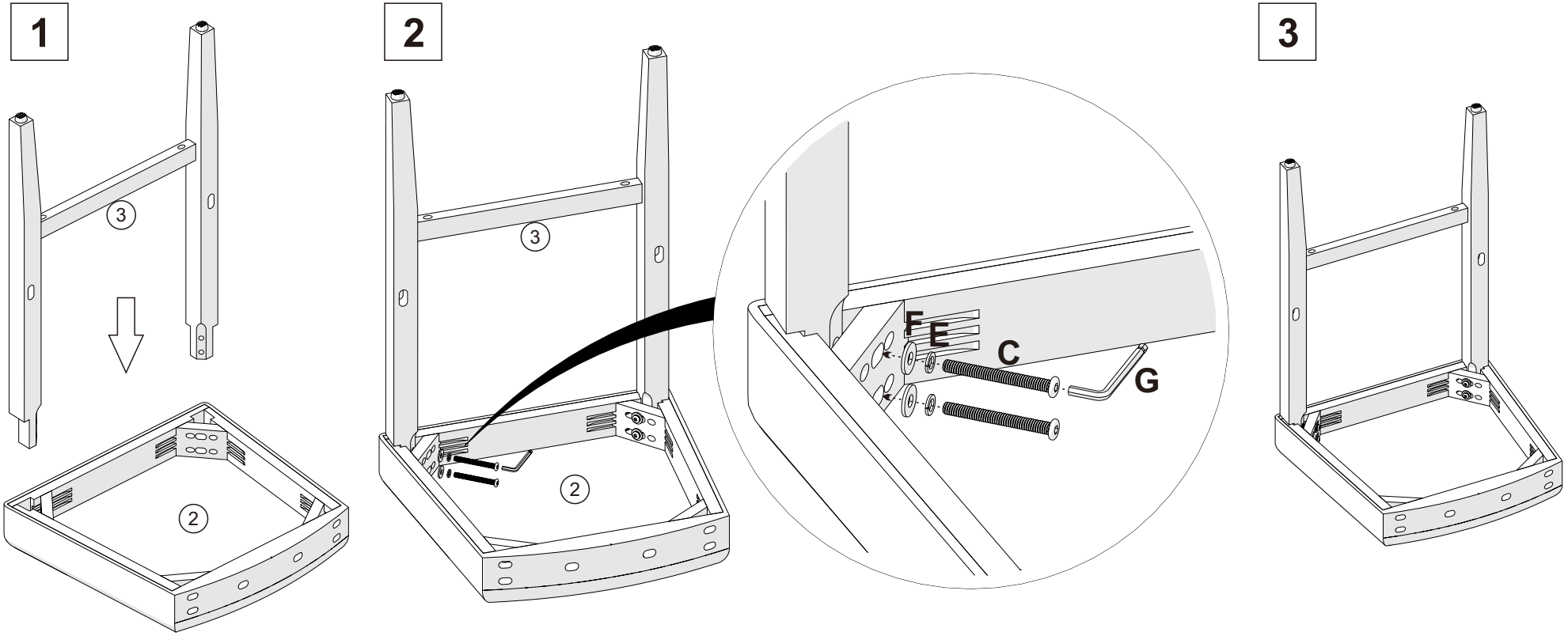

(C) x 4

5/16" x 2"
round hex screw

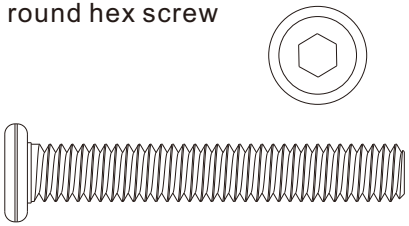

(E) x 4

5/16" lock washer



(F) x 4

7/8" flat washer

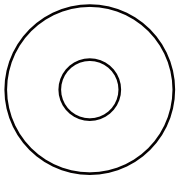

(G) x 1

5mm Ball end
Hex wrench

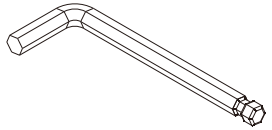

Please do not assemble with power tools

step 2.

1

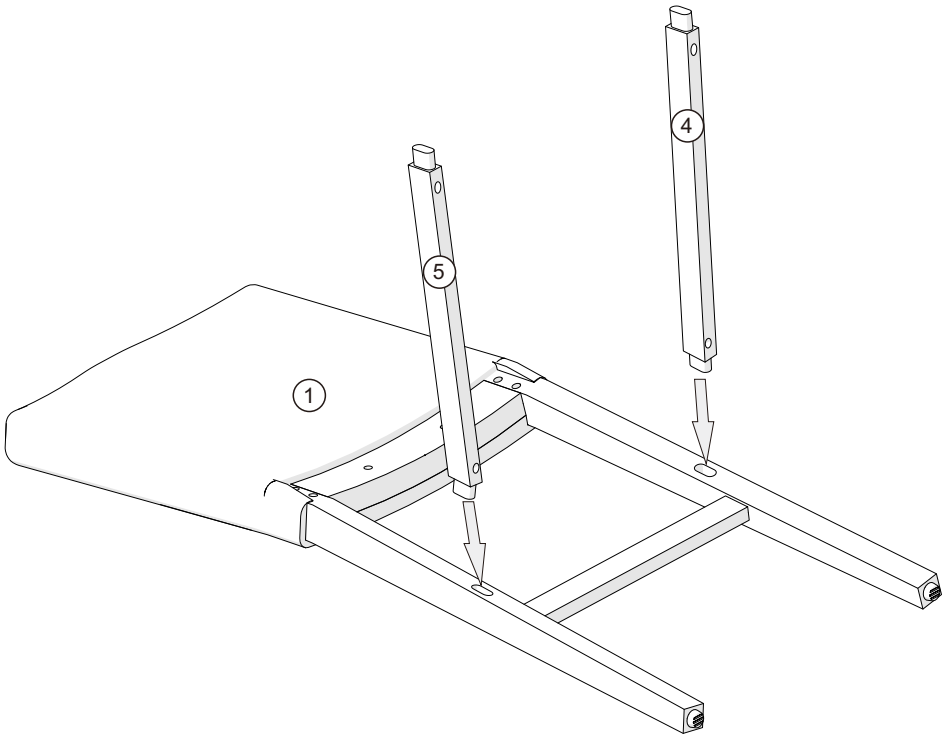

2

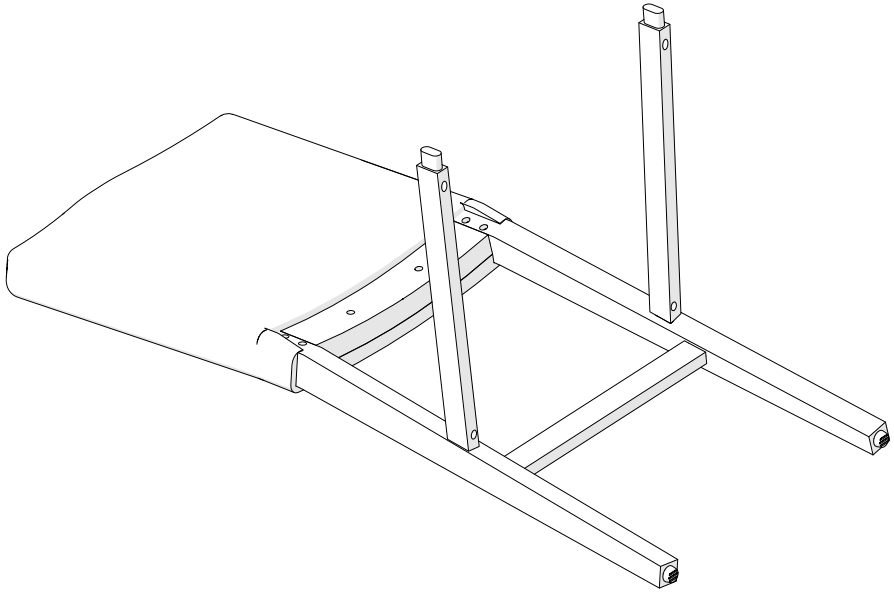

step 3.

1

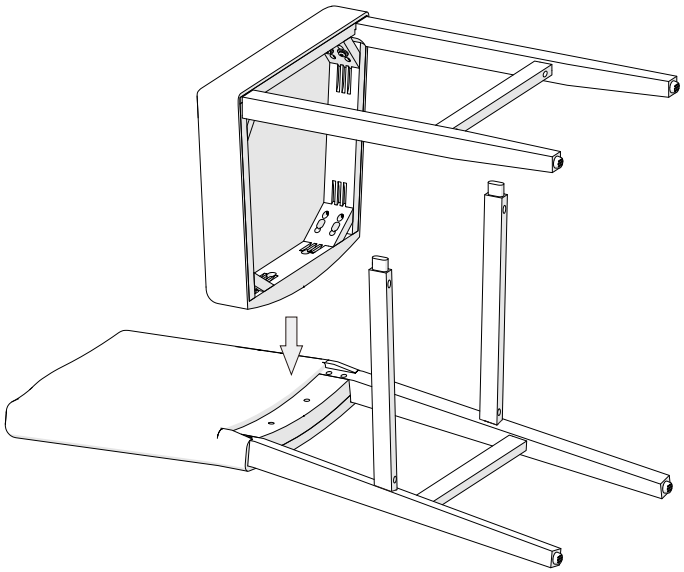

2 Do not tighten these two bolts until the next step.

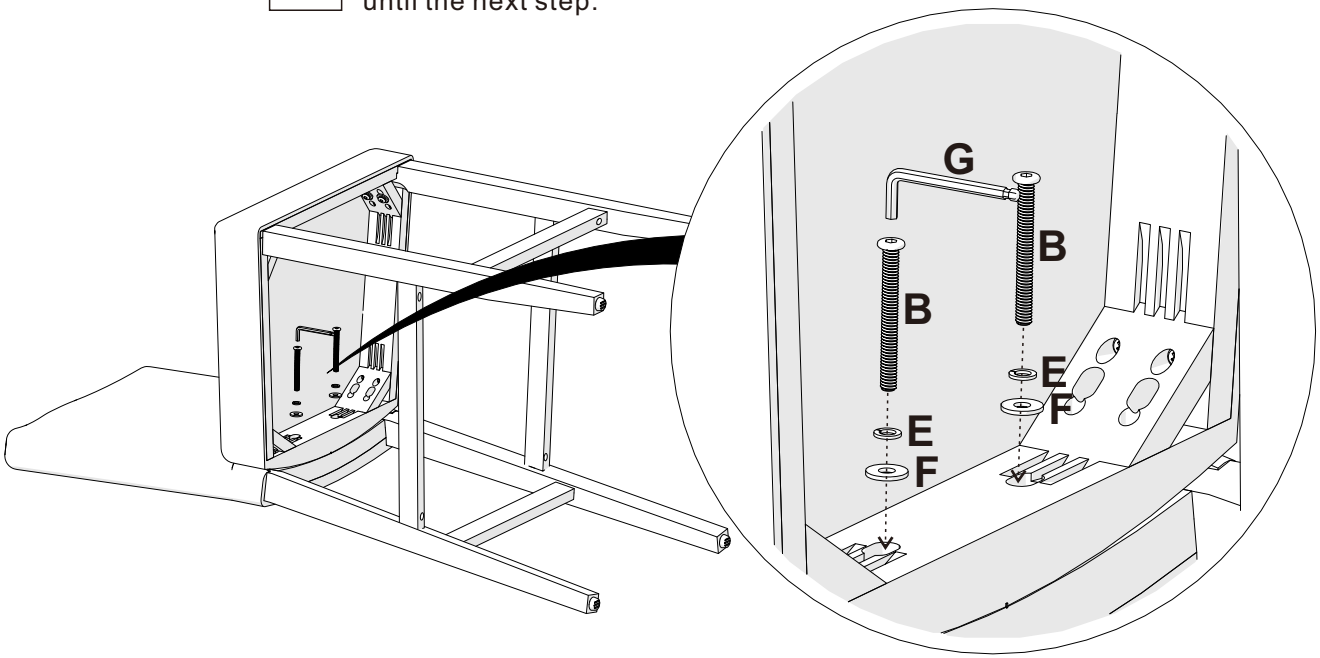

(B) x 2

5/16" x 2-1/4"
round hex screw

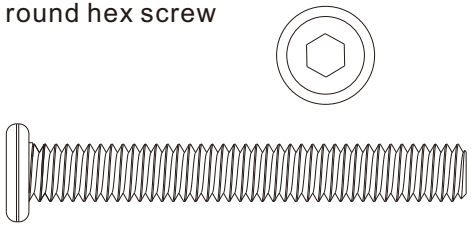

(E) x 2

5/16" lock washer



(F) x 2

7/8" flat washer

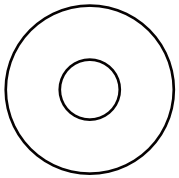

(G) x 1

5mm Ball end
Hex wrench

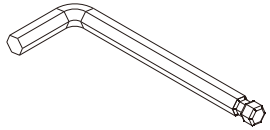

Please do not assemble with power tools

step 4.

1 Now you may tighten all 6 bolts.

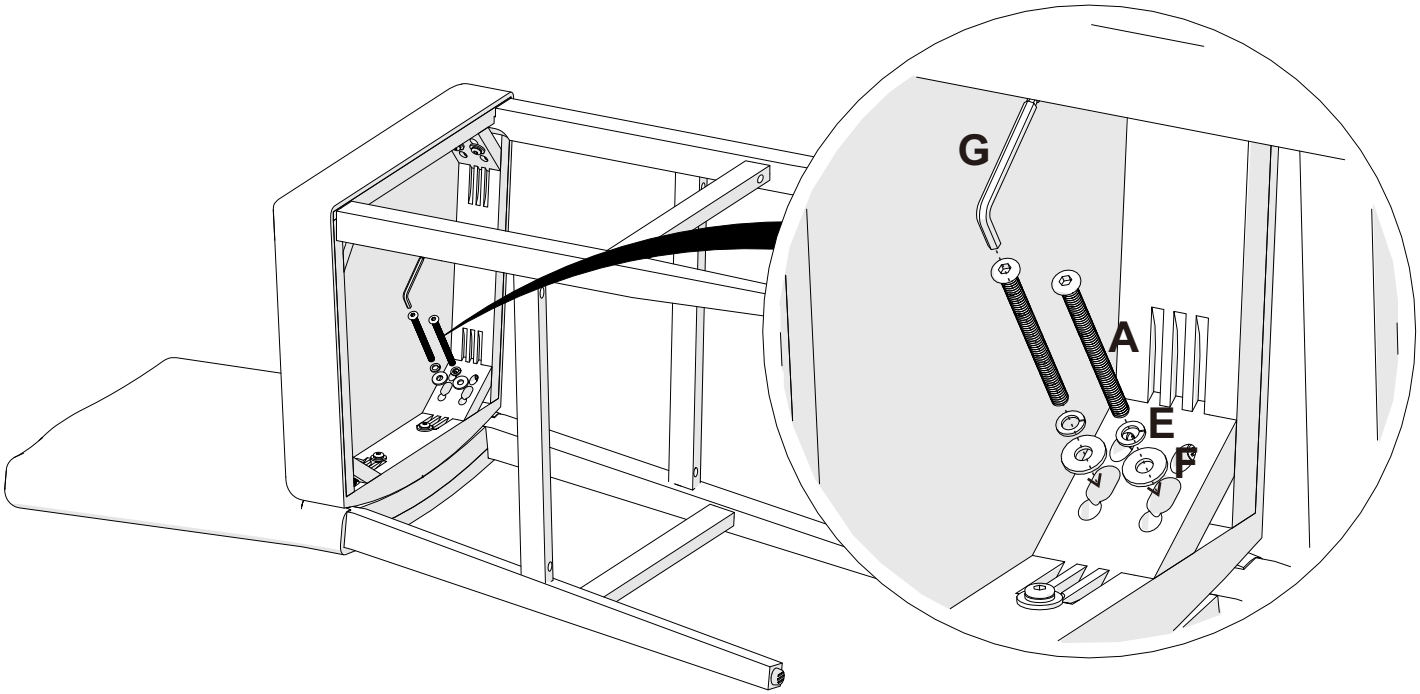

(A) x 4

5/16" x 3-1/4"
round hex screw

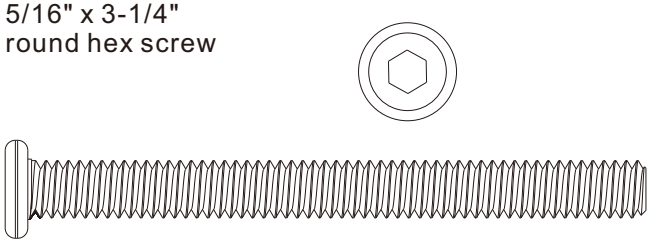

(E) x 4

5/16" lock washer



(F) x 4

7/8" flat washer

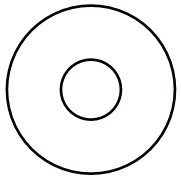

(G) x 1

5mm Ball end
Hex wrench

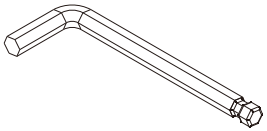

Please do not assemble with power tools

step 5.

1 Using philip screw driver tighten all the screws.

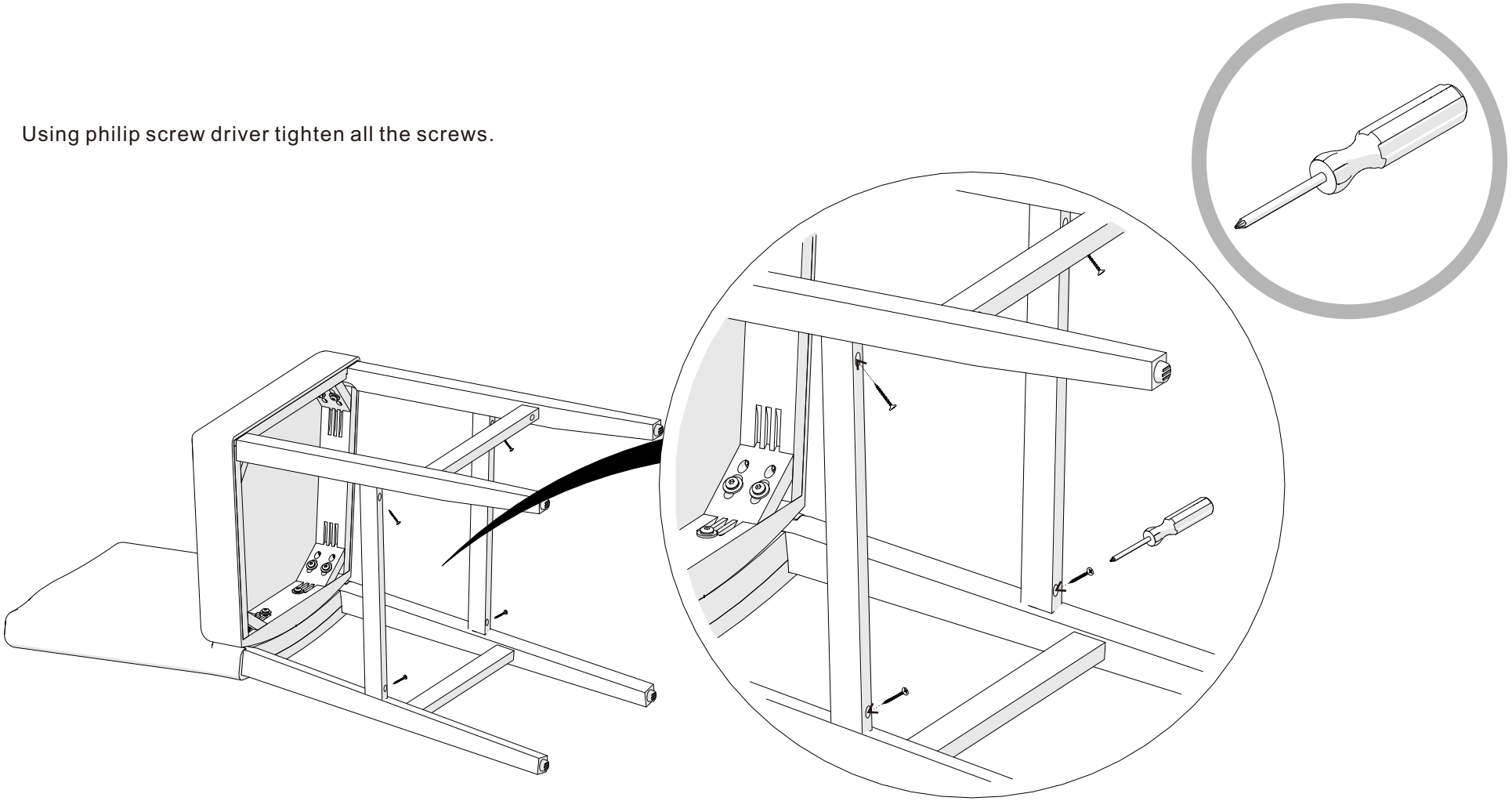

(D) x 4

Screw Flat head 50mm

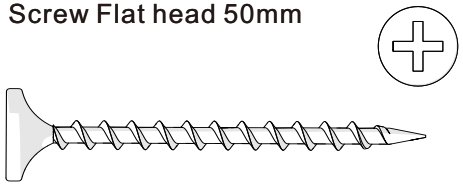

OK to Assemble with power Tools

step 6.

A friendly reminder from us:

Please keep the Allen wrench.

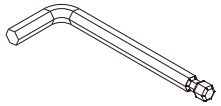

After a period of time, there may be a chance the KD furniture may become loose, please use an Allen wrench to tighten the loose bolts.

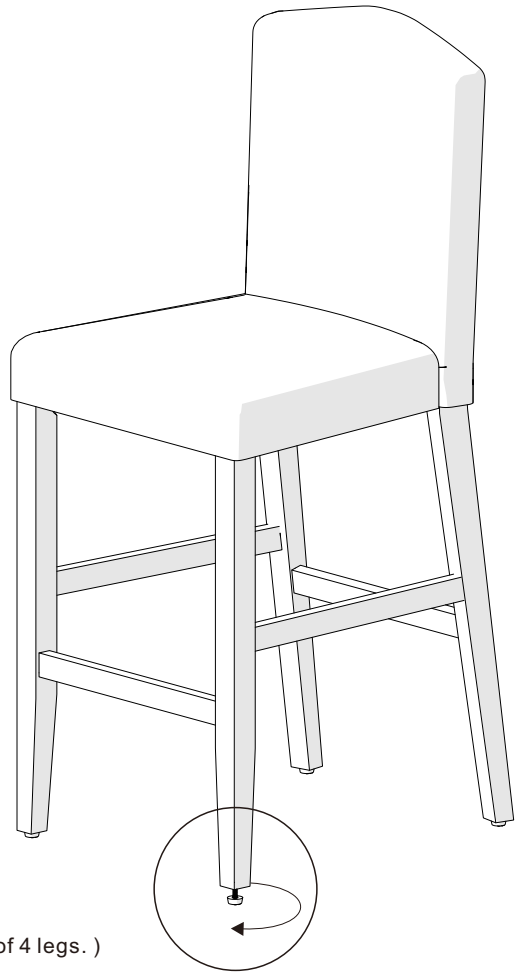

Adjustable leveling feet

(This part is already attached on the end cap of 4 legs.)

Level the furniture, use leveling feet if needed.