Viva COMFORT

72″ BASE CABINET

WITH LEFT SINK

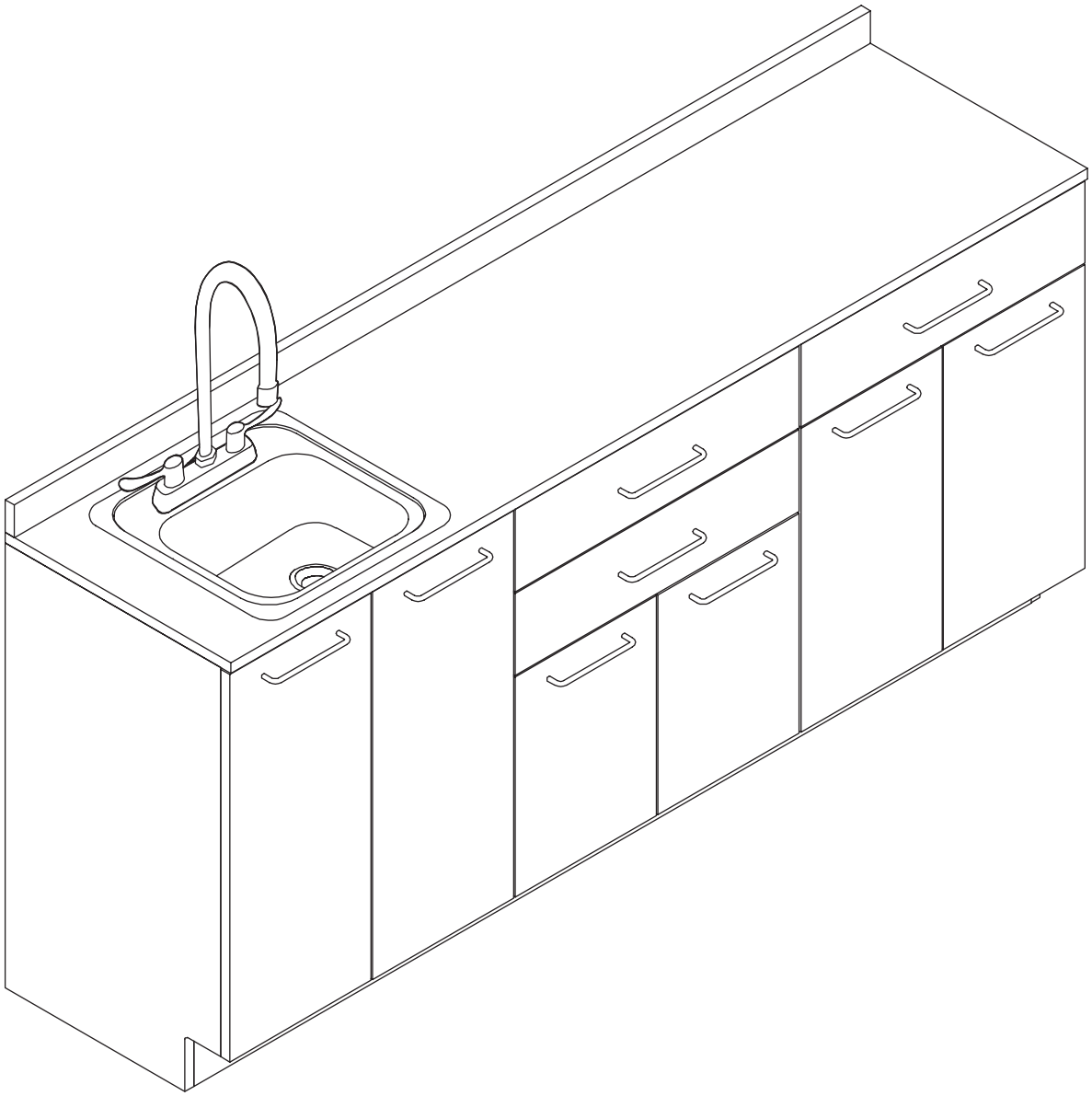

USER GUIDE

SKU: ADIME902-72-LS-GRY

Viva COMFORT

Thank you for your purchase.

Viva Comfort maintains a strong practice of ongoing development of products and commercial research.

We recognize that starting and maintaining a medical practice is expensive. We'll help make the process cost-effective and elegant. Additionally, our team of specialists will ensure everything you need works as efficiently as possible, so you can effectively treat your clients.

Table of Contents

2 Parts List

3 Tools Needed (But Not Included)

4 Hardware List

5 Assembly Instructions

18 Sink Assembly Instructions

22 Warranty

23 Notes

Parts List

1 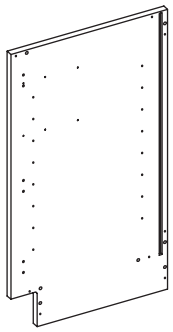 Left Panel	2 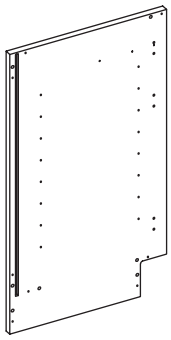 Right Panel	3 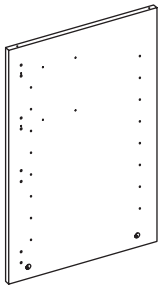 Middle Panel 1	4 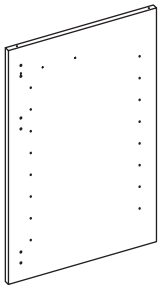 Middle Panel 2
5 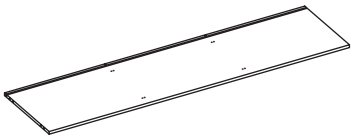 Bottom Panel	6 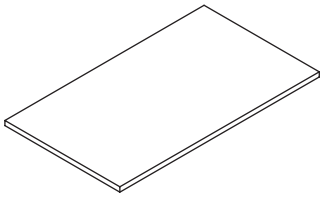 Removable Shelf 1	7 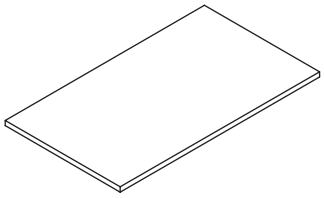 Removable Shelf 2	8 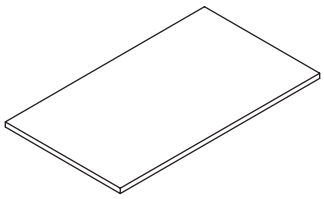 Removable Shelf 3
9 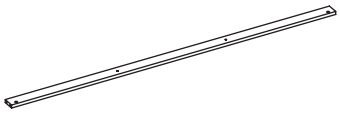 Top Front Rail	10 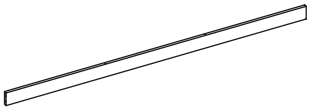 Center Back Rail 1	11 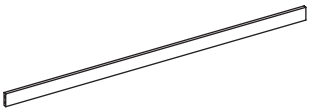 Center Back Rail 2	12 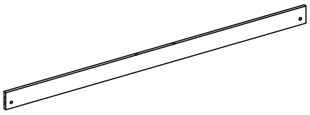 Bottom Back Rail
13 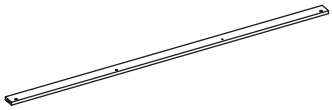 Top Back Rail	14 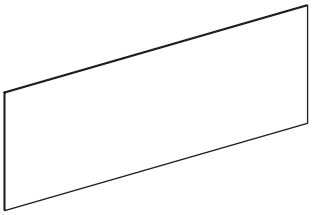 Back Panel	15 Drawer's Left Side (x3)	16 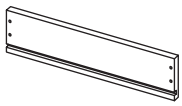 Drawer's Right Side (x3)

17 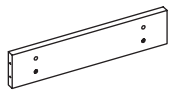 Drawer's Front (x3)	18 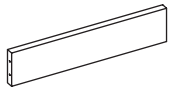 Drawer's Back (x3)	19 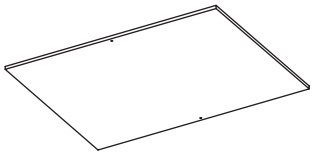 Drawer's Bottom (x3)	20 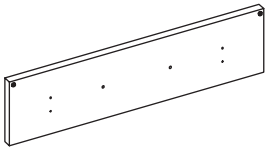 Drawer's Face 1
21 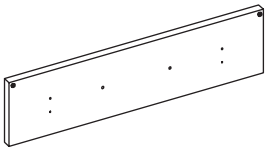 Drawer's Face 2	22 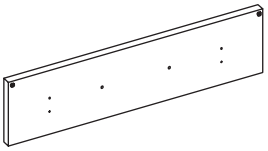 Drawer's Face 3	23 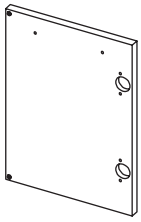 Left Door 1	24 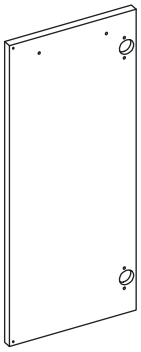 Left Door 2
25 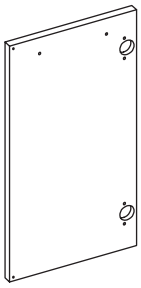 Left Door 3	26 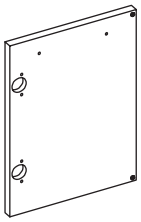 Right Door 1	27 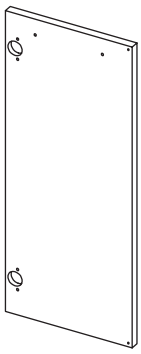 Right Door 2	28 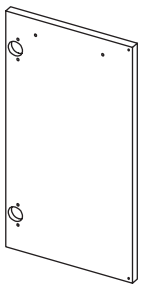 Right Door 3
29 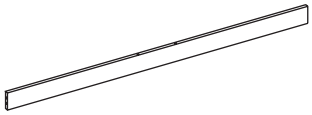 Toe Kick	30 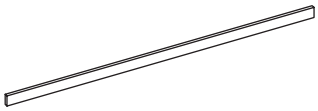 Top Filler	31 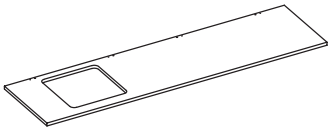 Top	32 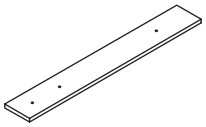 Support Rail (x2)

Hardware List

A Ø15*13mm Cam Lock (x24)	**B** Ø8*35mm Cam Lock Bolt (x24)	**C** Ø8x40mm Wooden Dowel (x26)	**D** Ball Bearing Slider (x3)
E1 Hinge 1 (x4)	**E2** Hinge 2 (x8)	**F** Ø3.5x15mm Wooden Screw (x36)	**G** Shelf Support (x12)
H Handle and Screw 1 Ø4x22mm (x3)	**I** Handle and Screw 2 Ø4x25mm (x6)	**J** Ø4x28mm Wood Screws (x6)	**K** Ø4x30mm Wood Screws (x12)
L Ø4x40mm Wood Screws (x32)	**M** Sticker 1 (x40)	**N** Sticker 2 (x20)	**O** Plastic Nail (x10)
P Antitip (x2)			

Tools Needed (But Not Included)

Philips Screwdriver	Flathead Screwdriver

Assembly Instructions

NOTE:

- Before starting, ensure you have an open, clean area to assemble your cabinet.
- Ensure you have all the necessary parts and hardware listed above.
- We highly recommend hiring a professional contractor to assemble and install your cabinet(s).
- The assembly of drawers and door are interchangeable, depending on preference. Depending on the orientation, you will have to use a drill to drill the predrilled holes for the door handle.

Step 1:

A. Insert Wooden Dowels (C) to the Left Panel (1), Right Panel (2), Bottom Panel (5), Top Front Rail (9), Center Back Rail 1 (10), Center Back Rail 2 (11), Bottom Back Rail (12), Toe Kick (29), and Top Filler (30), as pictured below.

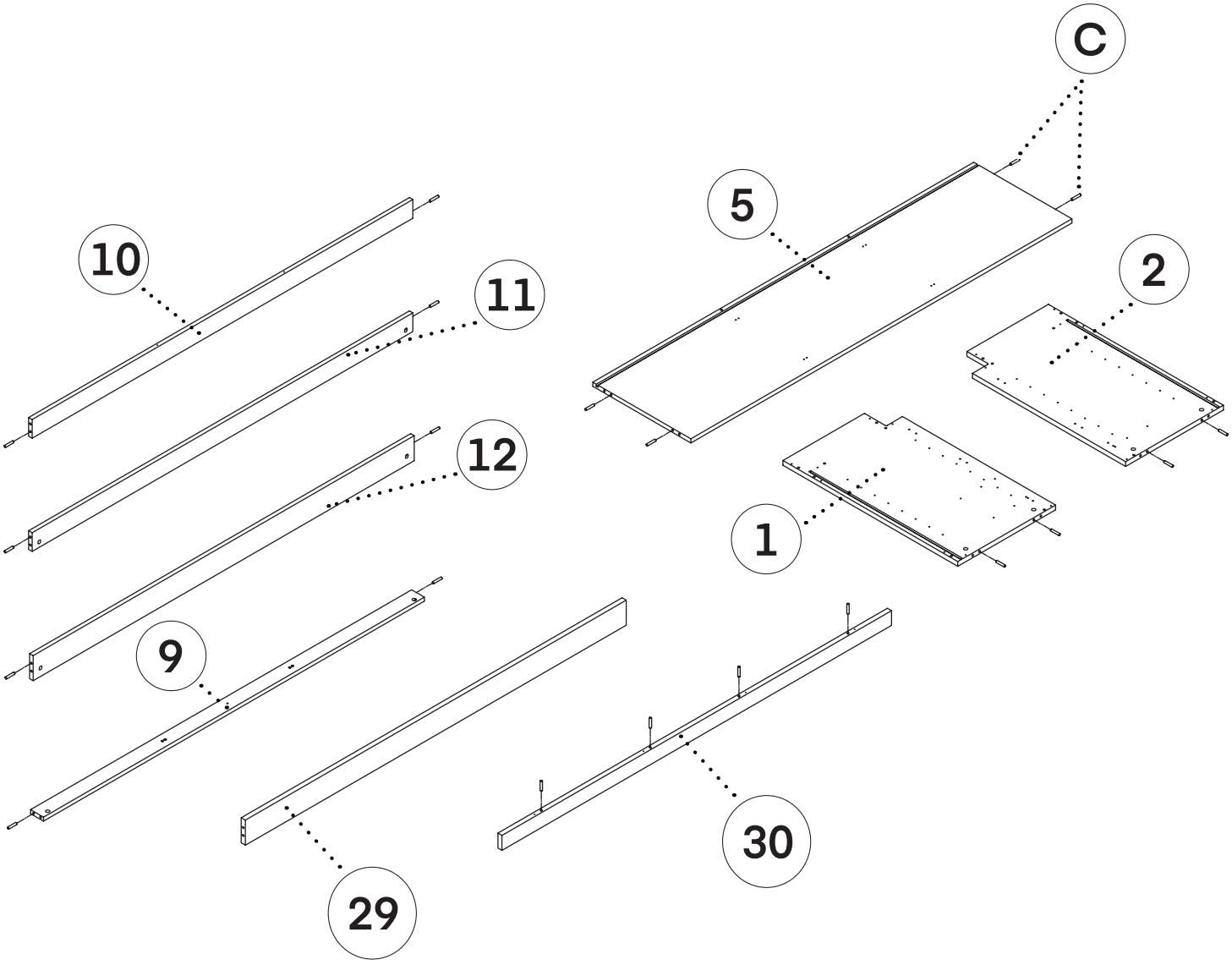

Step 2:

A. Insert Ø8*35mm Cam Lock Bolts (B) to the Left Panel (1), Right Panel (2), Top Panel (31), and Bottom Panel (5).

B. Assemble the Ball Bearing Sliders (D) to the Right Panel (2) using Ø3.5x15 mm Wood Screws (F).

C. Assemble the Support Rail (32) and Ball Bearing Sliders (D) to the right side of the Middle Panel 1 (3) and left side of the Middle Panel 2 (4) using Ø3.5x15 mm Wooden Screws (F).

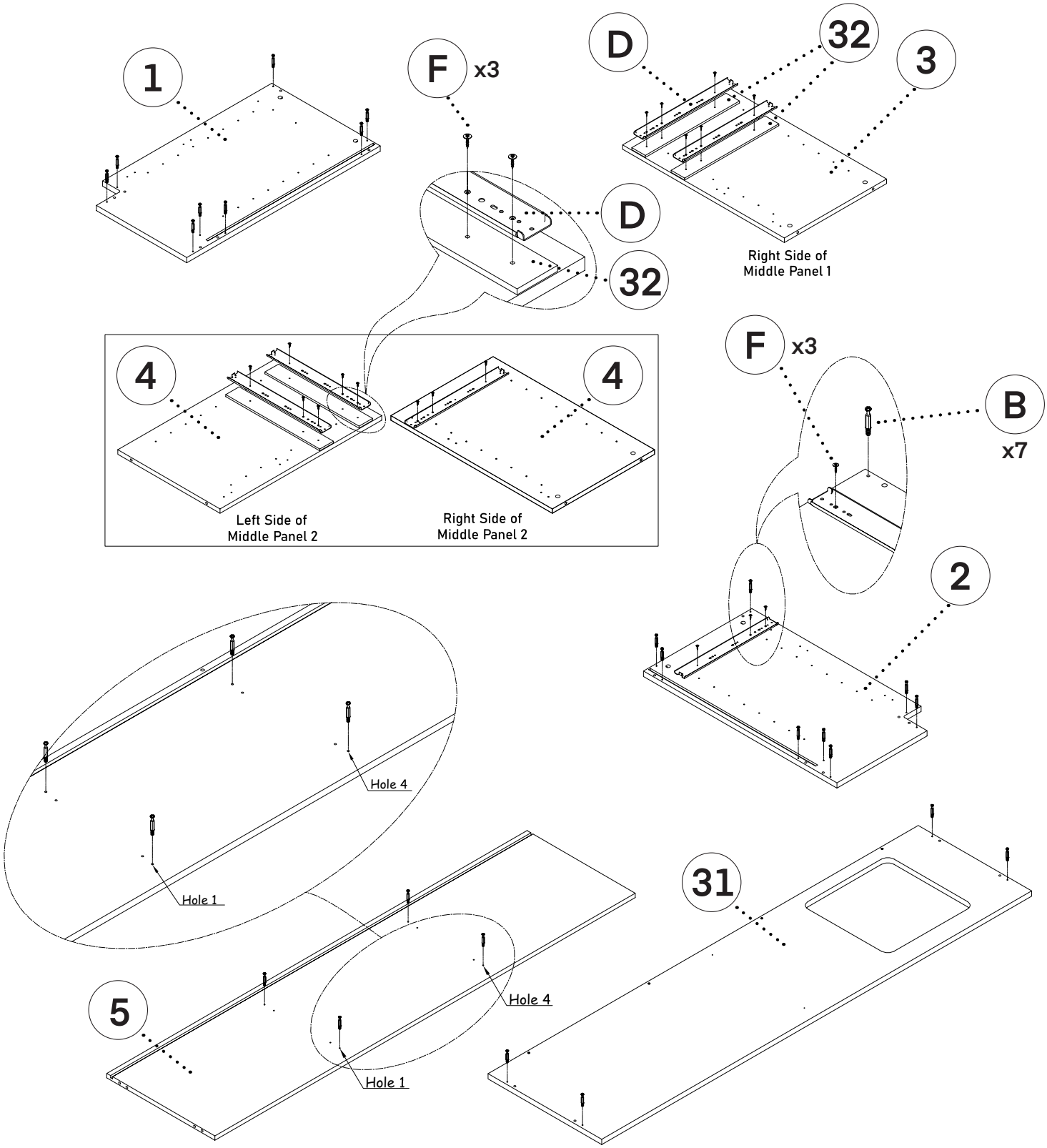

Step 3:

A. Assemble the Hinge 1 (E1) to the Left Door 2 (24) and Right Door 3 (28), using the included screws.

B. Assemble the Hinge 2 (E2) to the Left Door 1 (23), Left Door 3 (25), Right Door 1 (26), and Right Door 2 (27), using the included screws.

C. Attach the Handle 2 (I) to the Left Door 1 (23), Left Door 2 (24), Left Door 3 (25), Right Door 1 (26), and Right Door 2 (27), and Right Door 3 (28), using the included screws.

D. Secure using a Phillips head screwdriver.

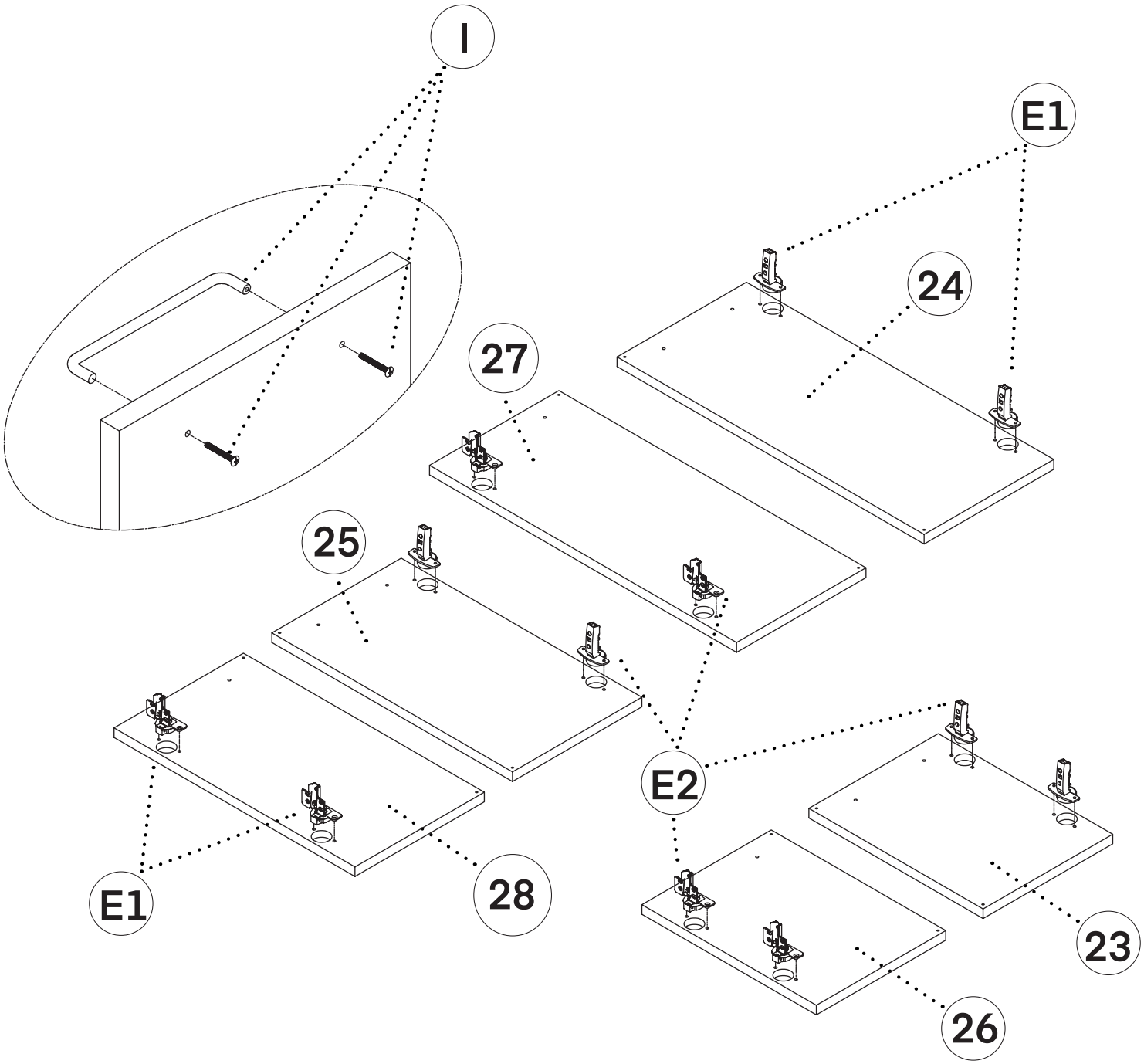

Step 4:

A. Assemble the Drawer's Left Side (15), Drawer's Right Side (16) to the Drawer's Front (17), Drawer's Back (18) using a total of Ø4x40 mm Wood Screws (L).

B. Secure using a Phillips head screwdriver.

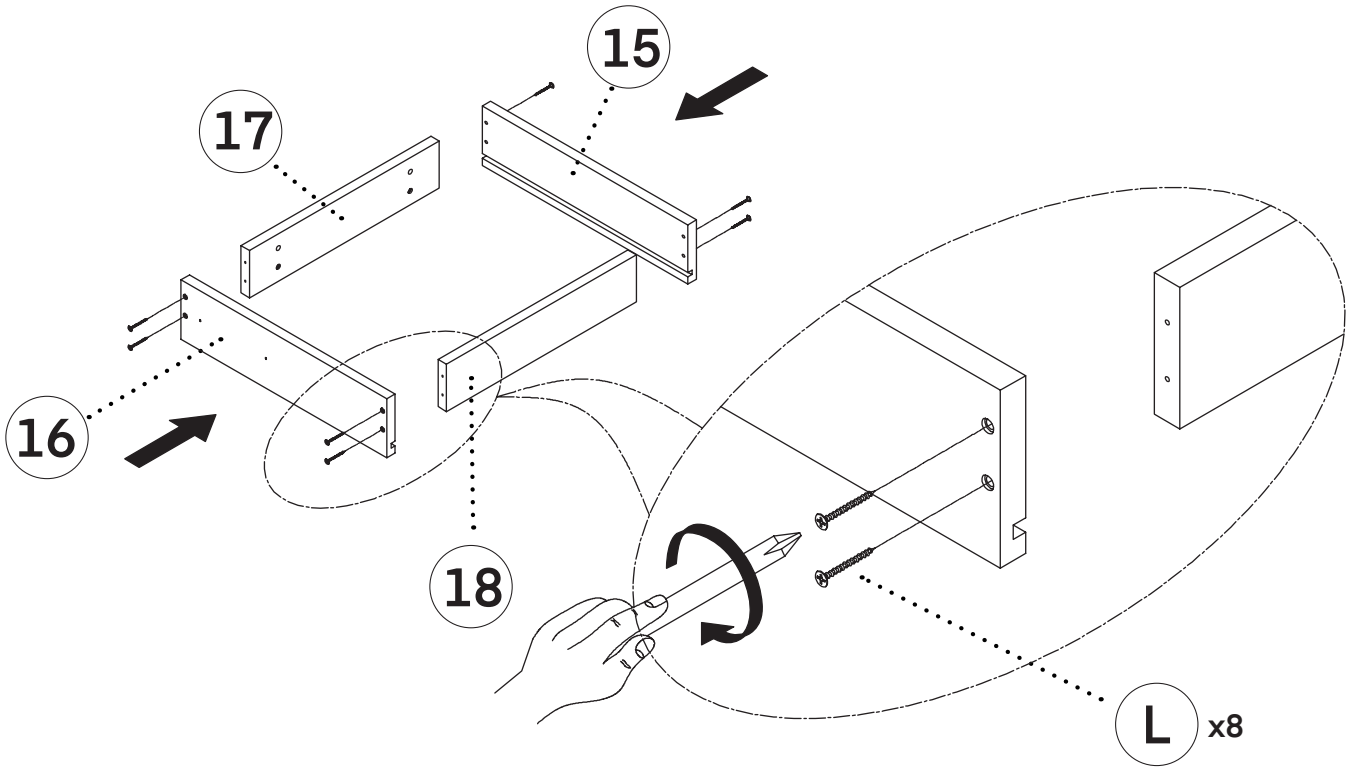

Step 5:

A. Assemble the Drawer's Bottom (19) using four Ø4x30 mm Wood Screws (K).

B. Secure using a Phillips head screwdriver.

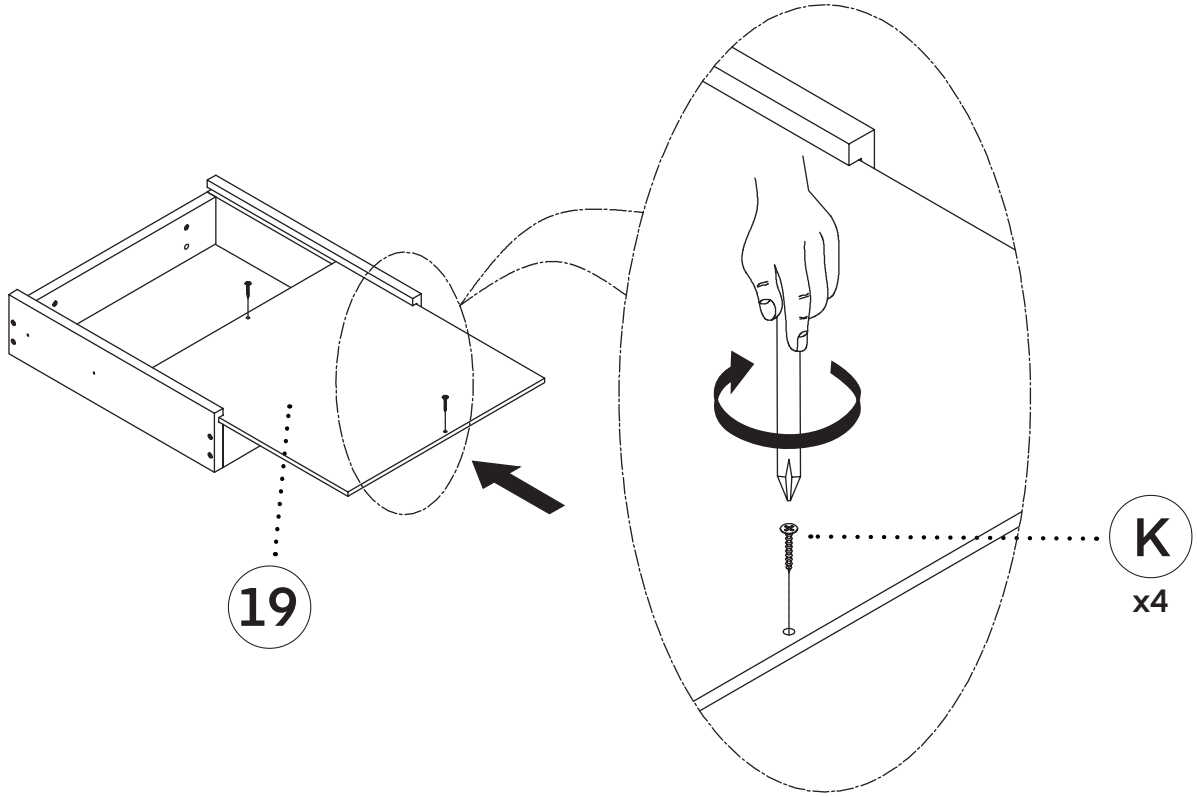

Step 6:

A. Assemble three Handles 1 (H) to the Drawer's Face 1 (20), Drawer's Face 2 (21), and Drawer's Face 3 (22) using the included screws.

B. Secure using a Phillips head screwdriver.

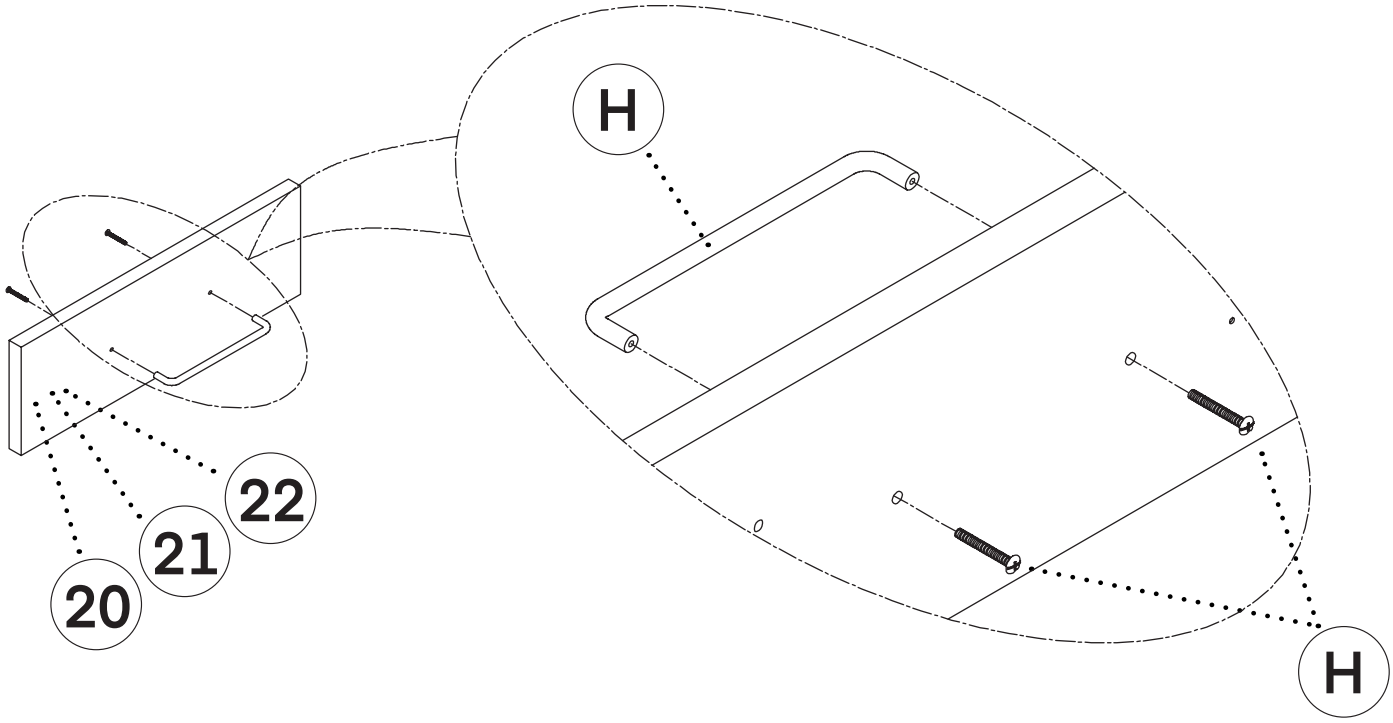

Step 7:

A. Assemble the Ball Bearing Sliders (D) to the drawer using three Ø3.5x15 mm Wood Screws (F) per slider.

B. Assemble the Drawer's Front (17) to the Drawer's Face 1 (20), Drawer's Face 2 (21), and Drawer's Face 3 (22) using two Ø4x28 mm Wood Screws (J).

C. Secure using a Phillips head screwdriver.

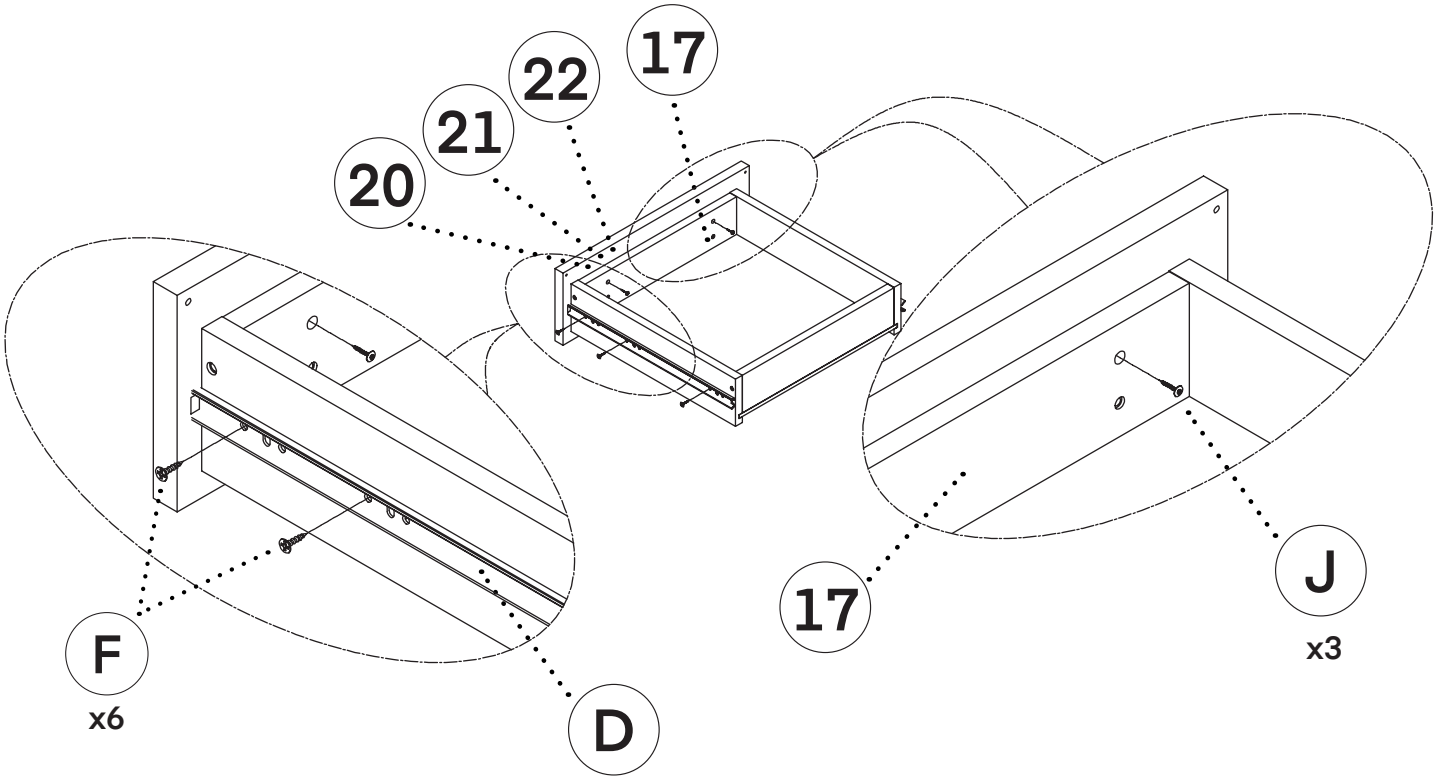

Step 8:

A. Affix the Top Panel (31) and Top Filler (30) with a Ø4x40mm Wood Screw (L), as pictured below.

B. Secure using a Phillips head screwdriver.

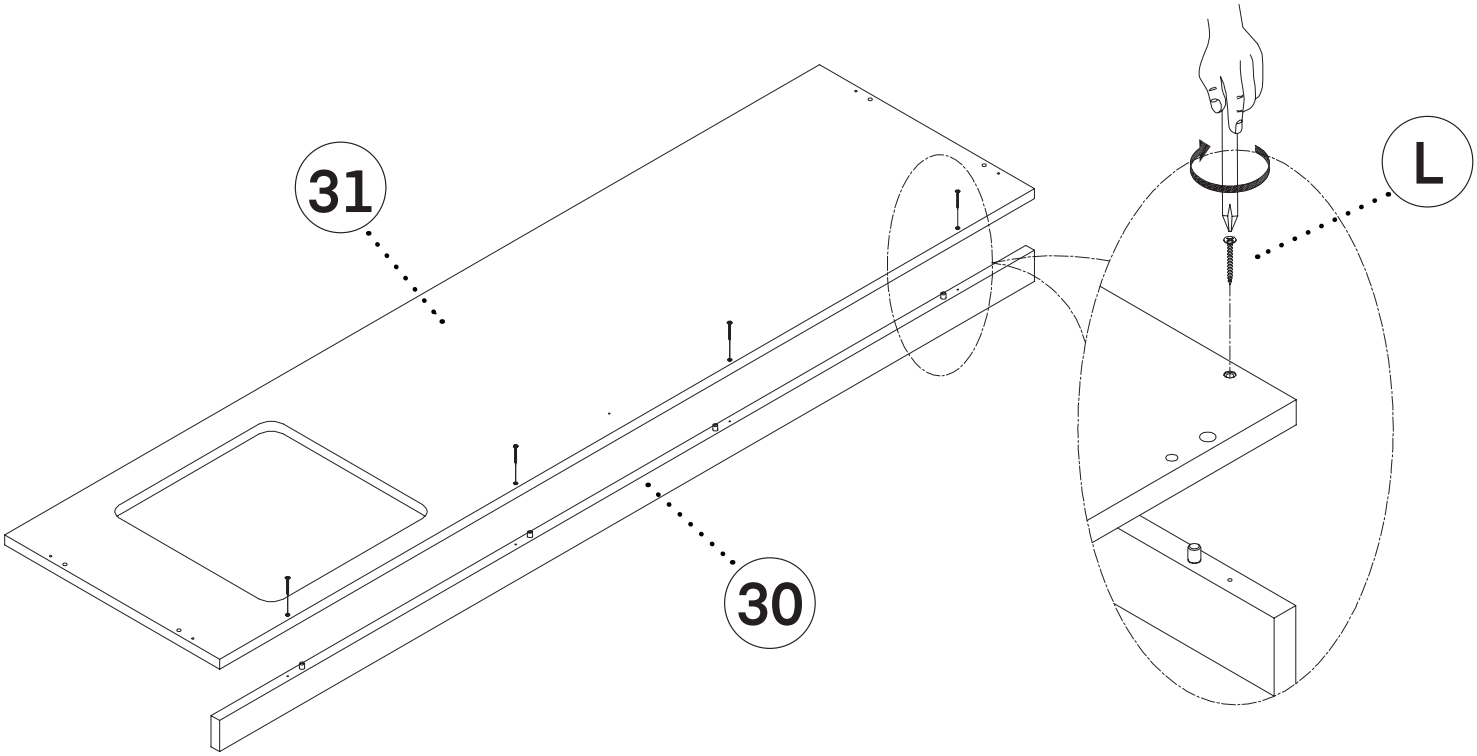

Step 9:

A. Flip the assembled structure from Step 9 on its side.

B. Take the Middle Panel 1 (3) and Middle Panel 2 (4) secure it on top of the hardware you just installed in Step 1.

a. Push down until it is flush with the Bottom Panel (5).

b. Adhere two Ø15*13mm Cam Locks (A) per panel, to the bottom of the Middle Panel 1 (3) and Middle Panel 2 (4) as pictured, and turn them clockwise to secure in place.

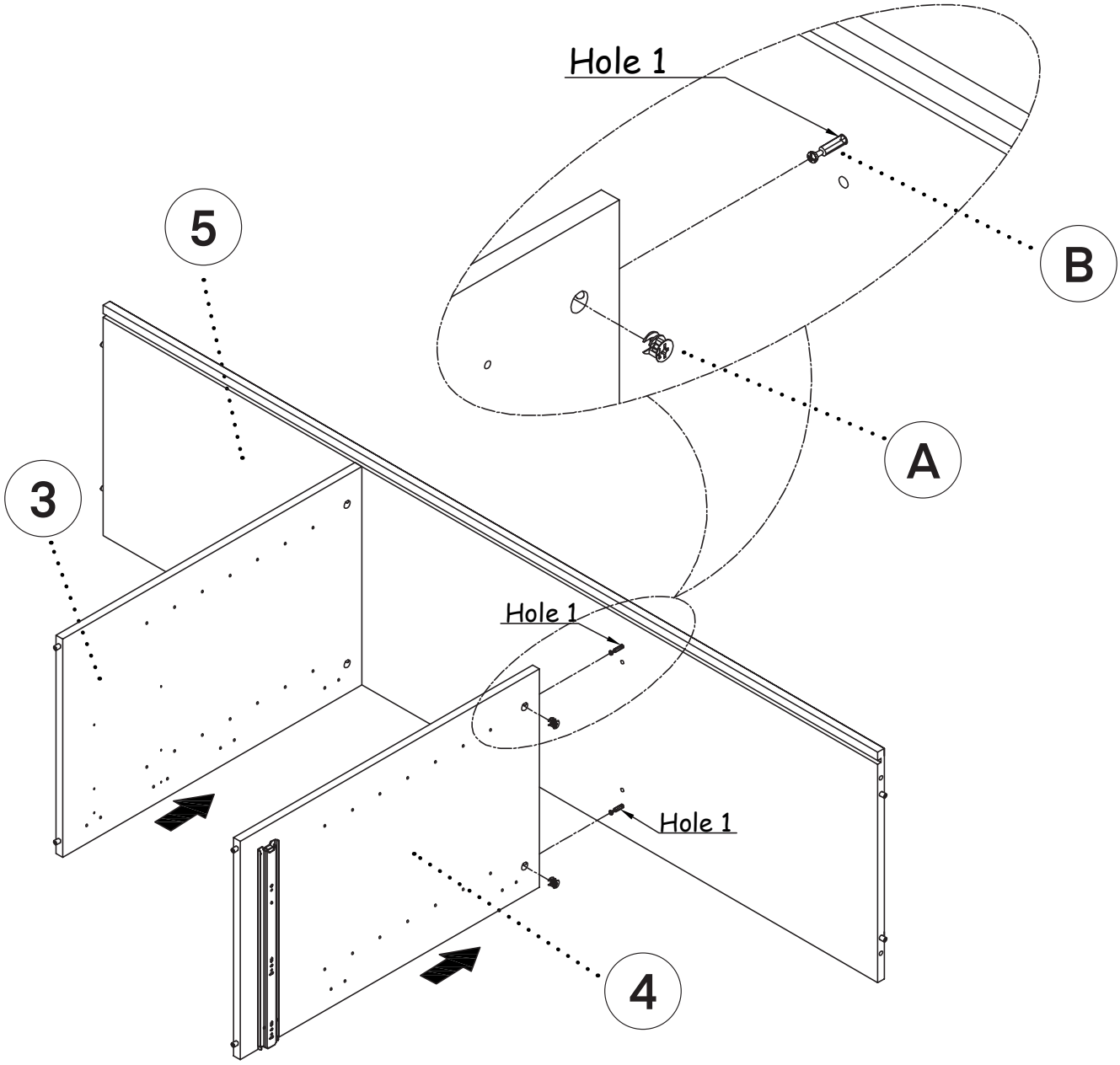

Step 10:

A. Affix the Top Front Rail (9), Center Back Rail 1 (10), and Top Back Rail (13) to the Middle Panel 1 (3), and Middle Panel 2 (4) using four Ø4x40 mm Wood Screws (L) with a Phillips head screwdriver, as pictured.

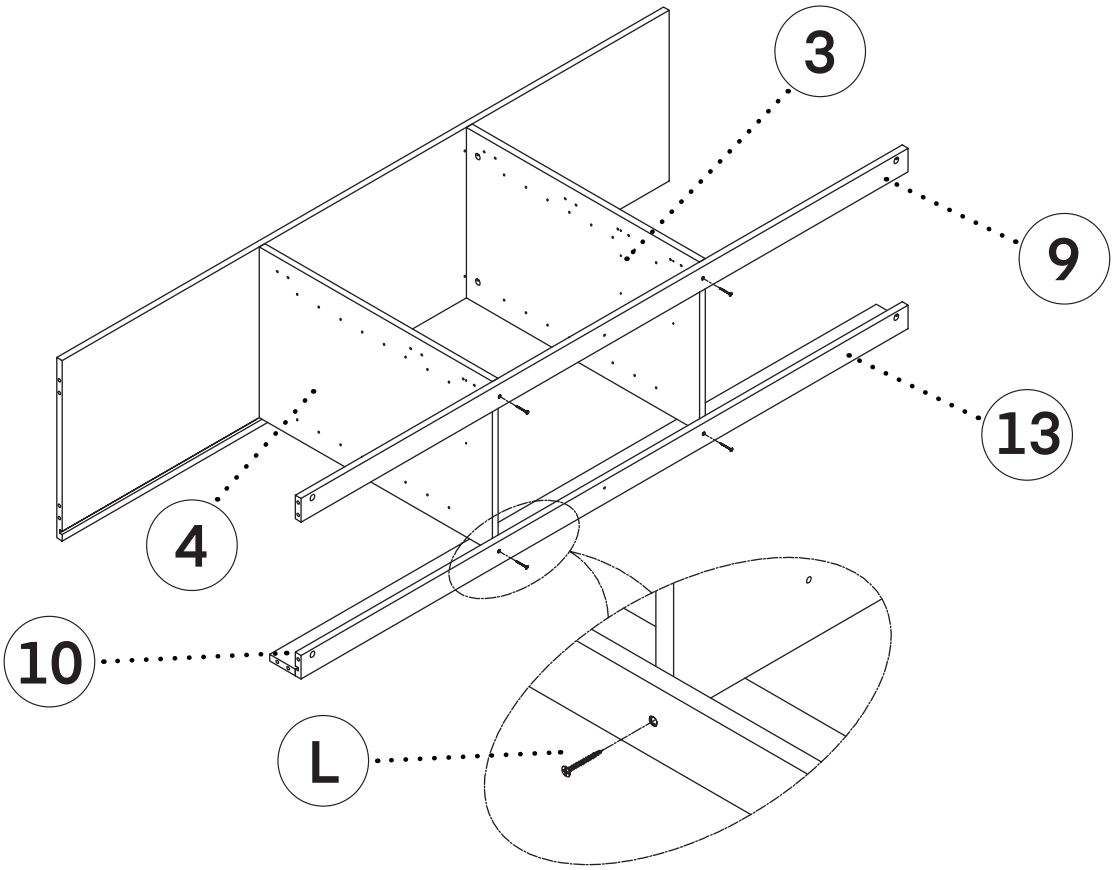

Step 11:

A. Slide the Back Panel (14) in between the crevices on the Top Back Rail (13) and Bottom Panel (5).

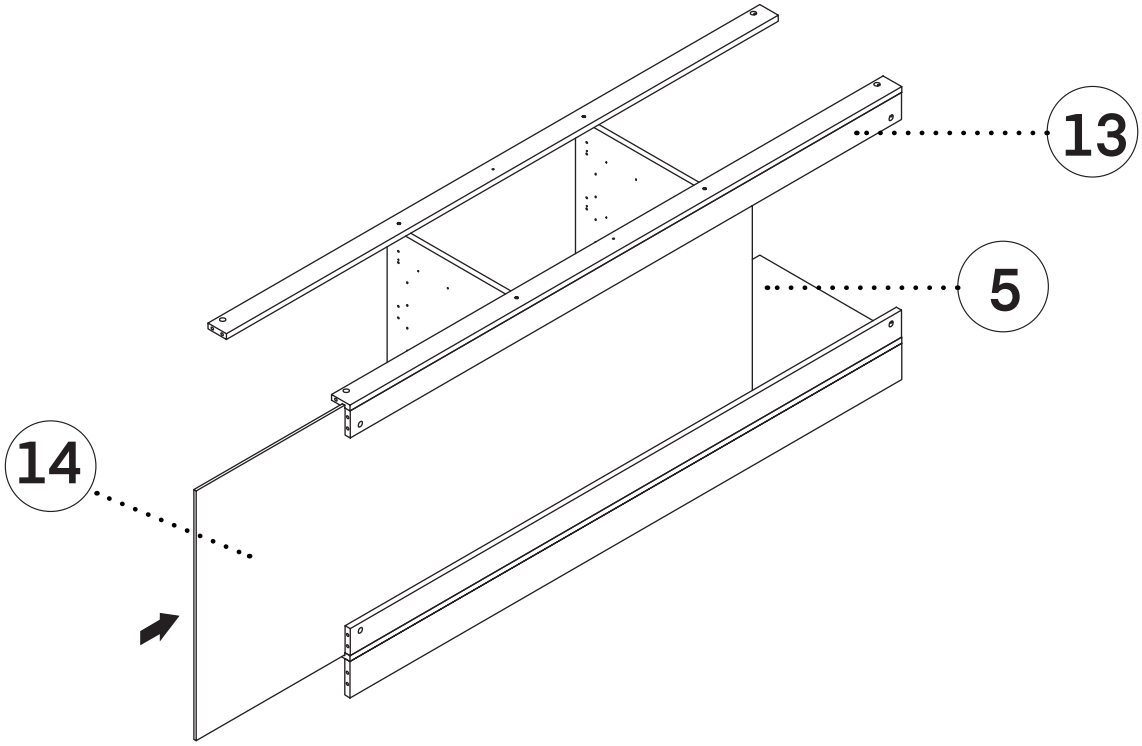

Step 12:

A. Locate the Left Panel (1) and Right Panel (2) and lay it on a flat, clean surface.

B. Attach the Top Front Rail (9), Center Back Rail 1 (10), Center Back Rail 2 (11), Bottom Back Rail (12), Top Back Rail (13), Toe Kick (29), and Bottom Panel (5) to the side of the Left Panel (1), and Right Panel (2) using Ø15*13mm Cam Locks (A).

C. Insert ten Plastic Nails (O) into the bottom of the Left Panel (1), the Right Panel (2), the Bottom Back Rail (12), and the Toe Kick (29) by tapping them with a rubber mallet.

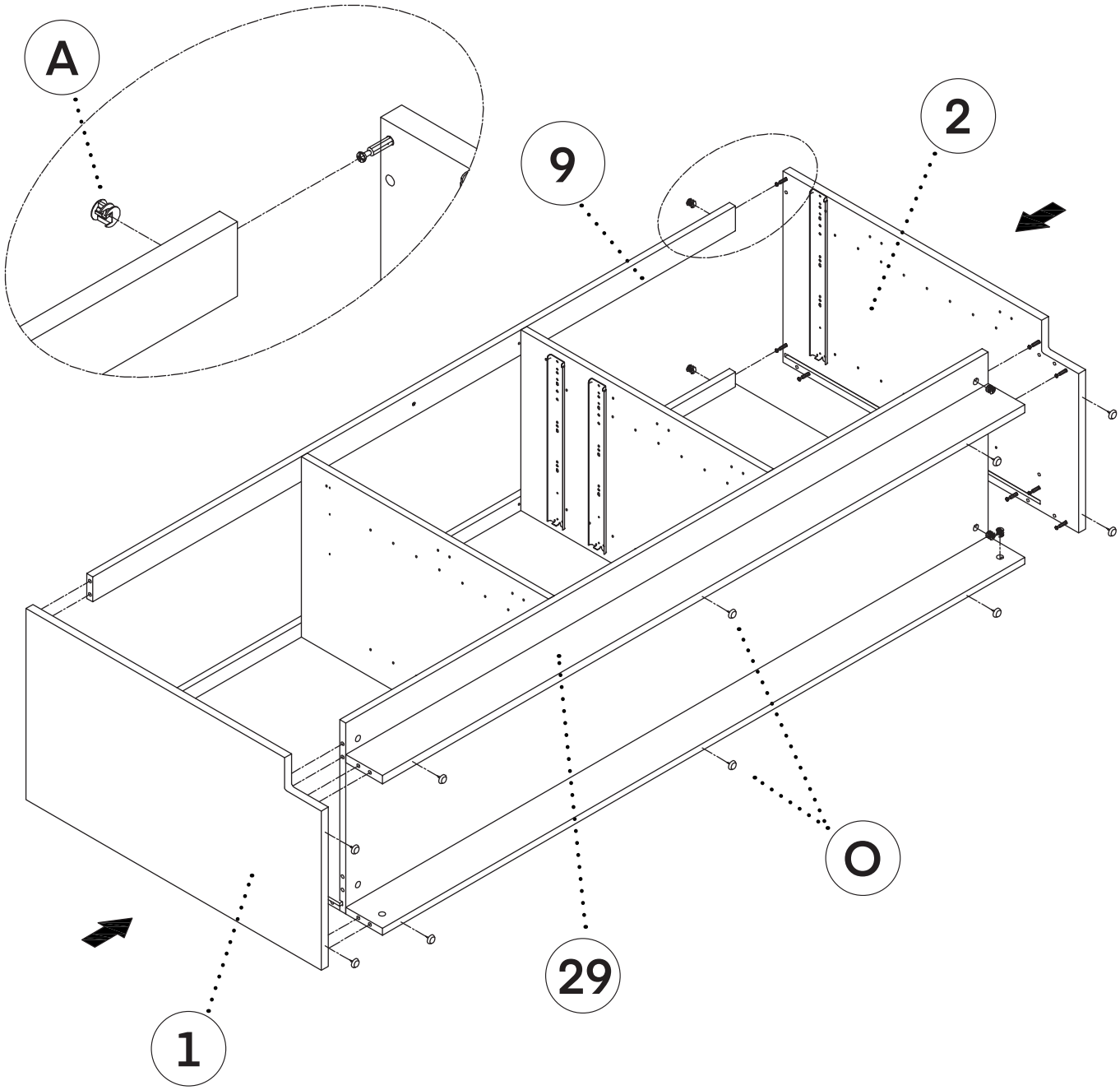

Step 13:

A. Place the Top Panel (31) on top of the installed hardware.

B. Insert four Ø15*13mm Cam Lock (A) into the accompanying holes located on the side panels.

C. Using Ø4x30mm Wood Screw (K), connect Top Panel (31) to the Top Front Rail (9) and Top Back Rail (13).

D. Apply Sticker's 2 (N) to cover the Ø15*13mm Cam Lock (A) and any unused holes inside your cabinet.

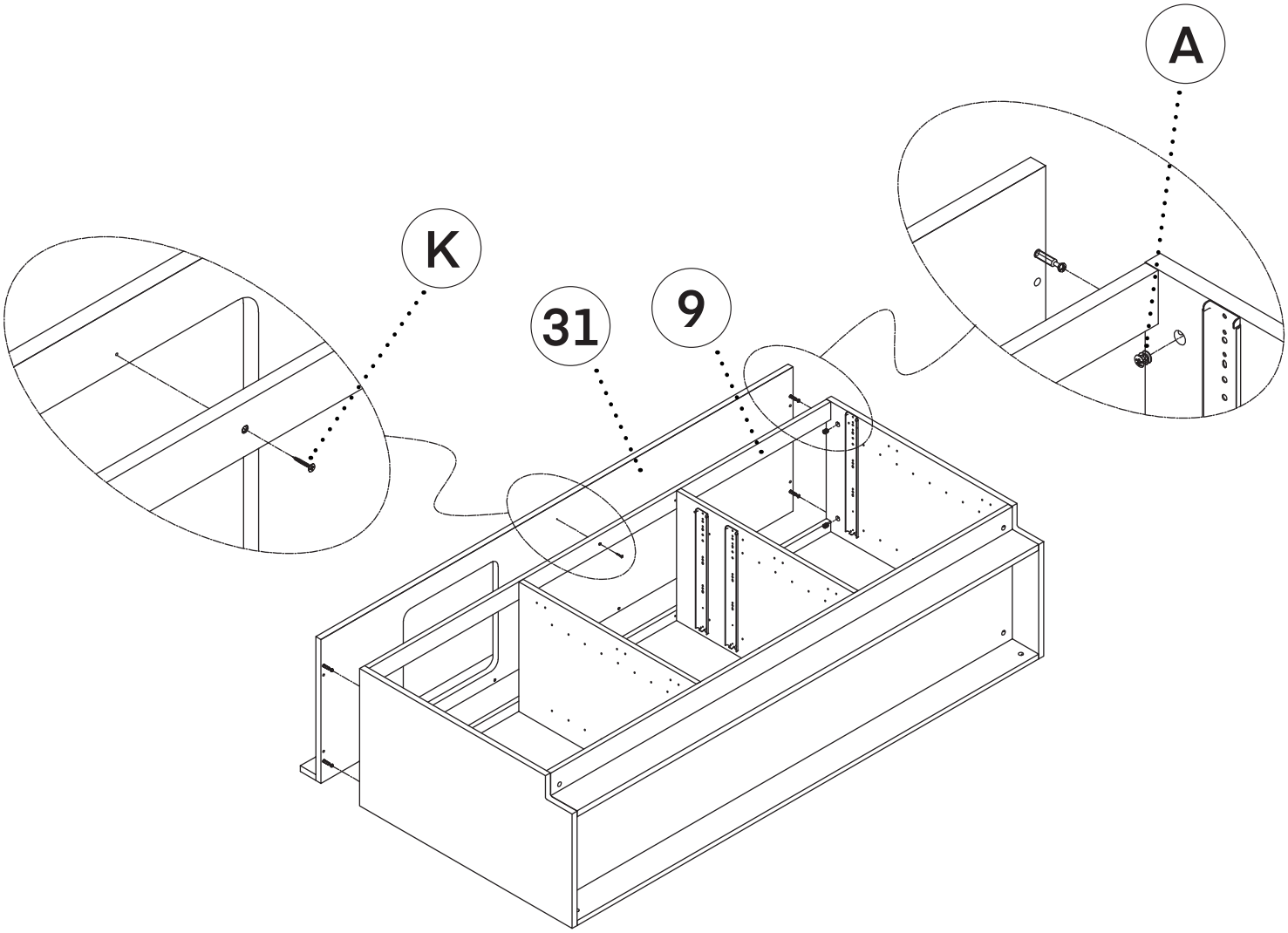

Step 14:

A. Insert the assembled drawers by sliding them onto the sliders.

B. Should the drawers not fit properly, adjust them by doing the following:

a. Loosen the Ø4x28mm Wood Screws (J) on the Drawer's Face 1 (20), Drawer's Face 2 (21), and Drawer's Face 3 (22).

b. Move the drawer's face up, down, left, and right until it fits.

c. Tighten the Ø4x28mm Wood Screws (J).

d. Insert and tighten the Ø4x30mm Wood Screws (K).

C. Use Sticker's 1 (M) to cover the Ø4x30mm Wood Screws (K) and Ø4x40mm Wood Screws (L) on the drawers.

Step 15:

A. Add the Shelf Supports (G) to the Left Panel (1), Right Panel (2), Middle Panel 1 (3), and Middle Panel 2 (4).

B. Put the Removable Shelf 1 (6), Removable Shelf 2 (7), and Removable Shelf 3 (8) ontop of the Shelf Supports (G).

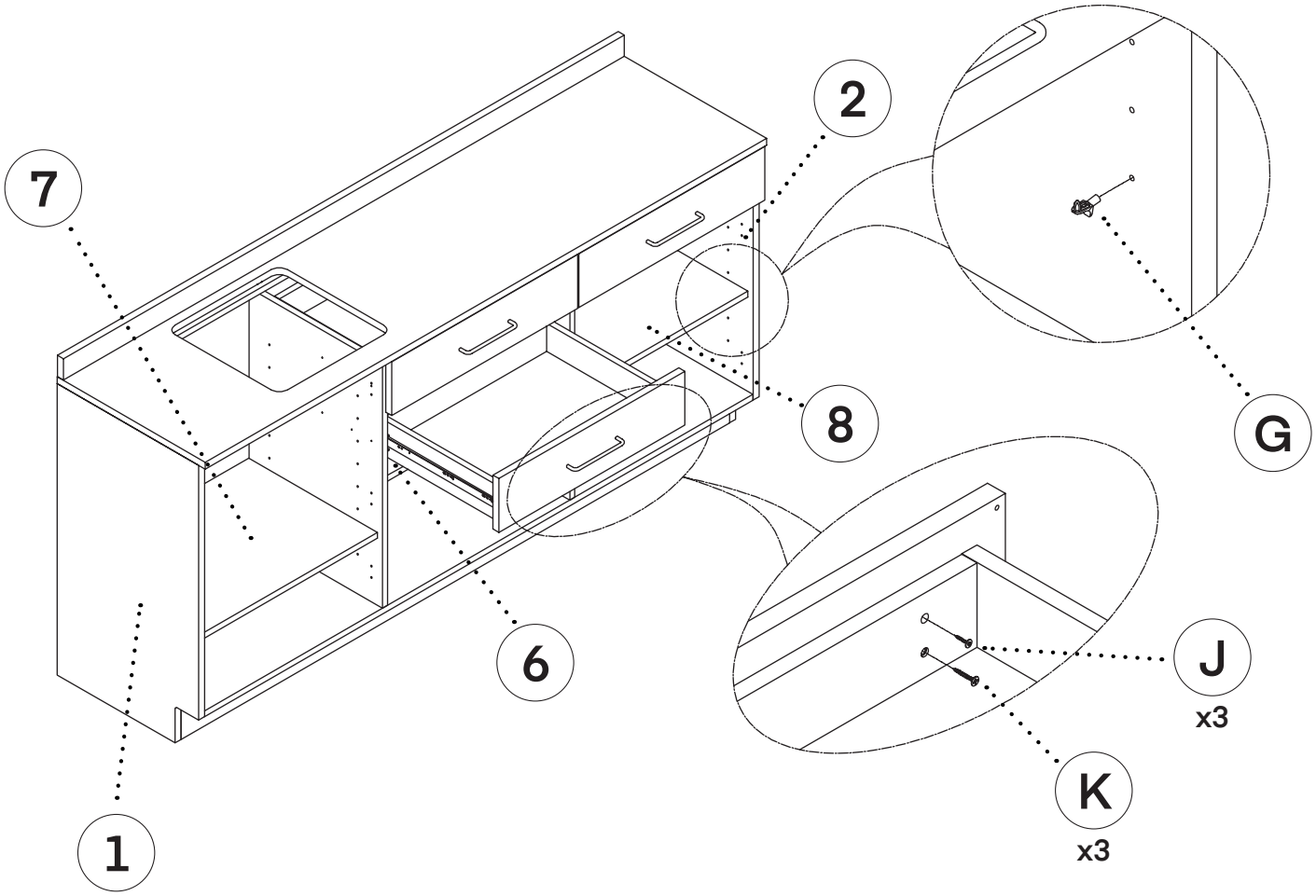

Step 16:

A. If the doors aren't lining up, adjust the screw on the Hinges 1 (E1) and Hinges 2 (E2) by loosening or tightening it until the door sits straight.

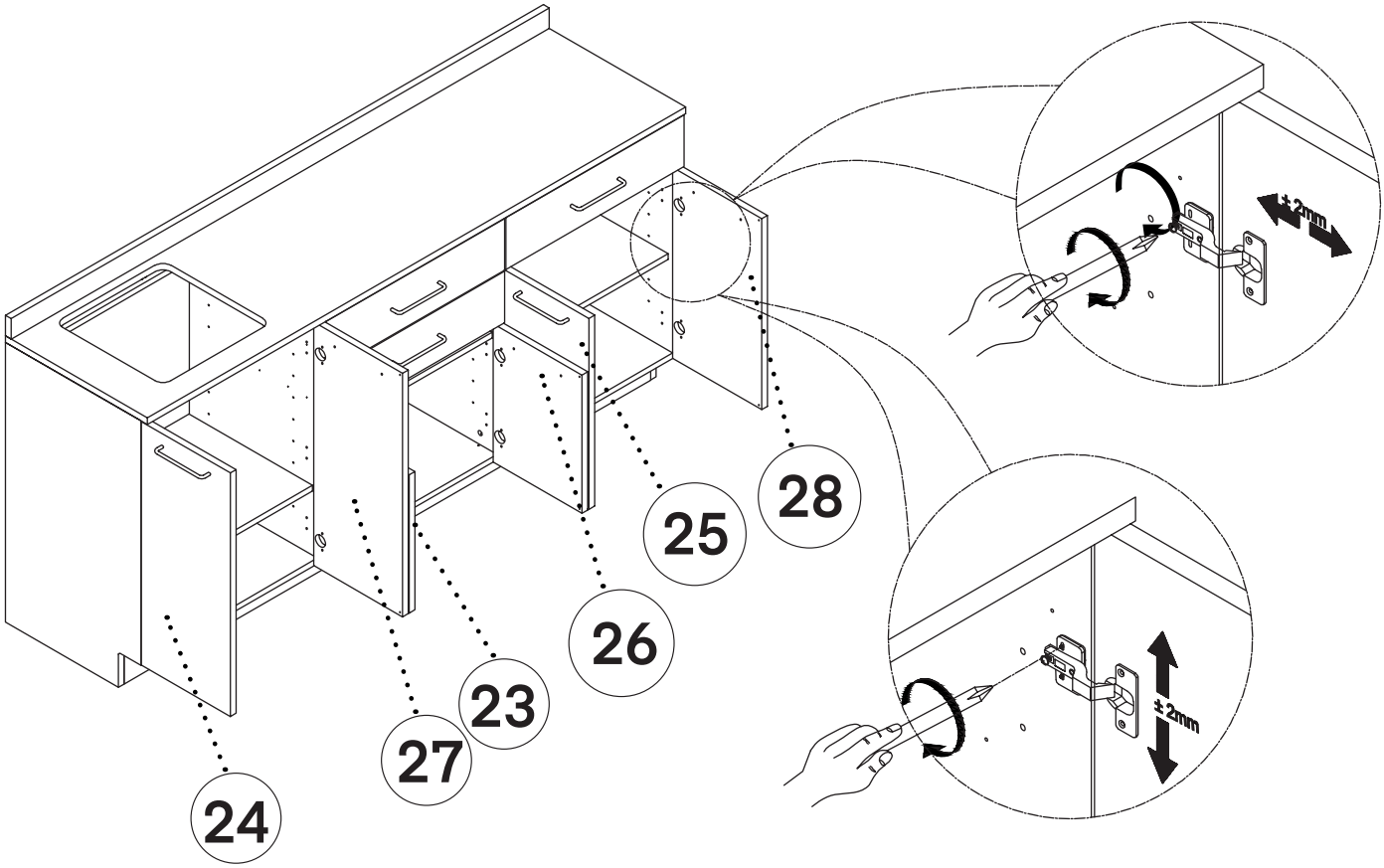

Step 17:

A. Should you choose to anchor your cabinet to the wall, we've included four Plastic Anchors (P) and spare screws for you, but it is not required.

Step 18:

A. Drill the four holes marked on the wall with a 9 mm drill bit at a depth of 2.75".

B. Insert the four Plastic Anchors (P) into the holes.

C. Insert the four included Screws (P) into the predrilled holes on the cleat.

D. Secure them in place with either a Philips head screwdriver or an electric screwdriver.

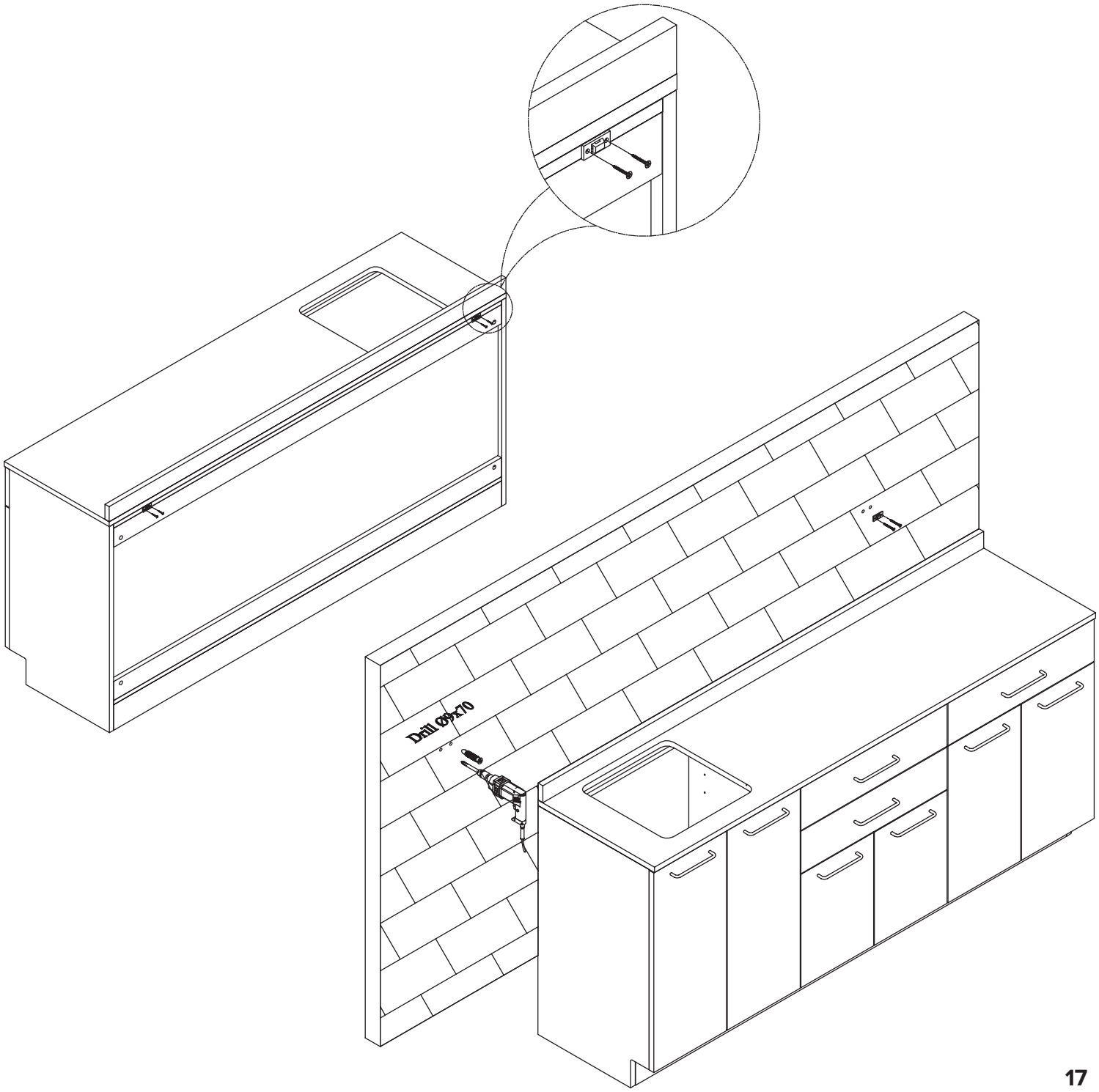

Medical Sink with Faucet and Handles Installation

Parts:

1	2
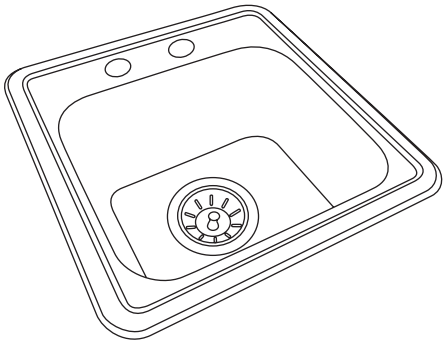 Medical Sink	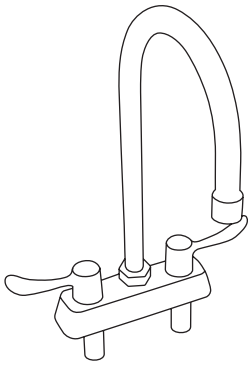 Faucet and Handles

Hardware:

A	B	C	D
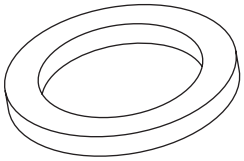 Rubber Washer (x2)	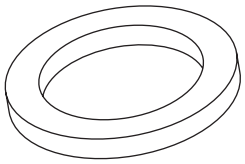 Metal Washer (x2)	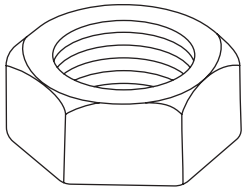 Hex Nut (x2)	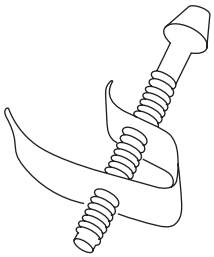 Sink Clips (x8)
E	**F**	**G**	**H**
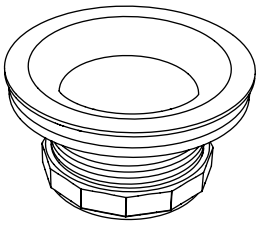 Plastic Drainer	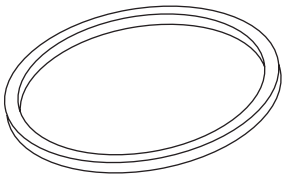 Rubber Washer (Drainer)	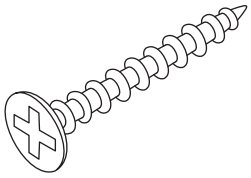 M6 x 20mm Screw	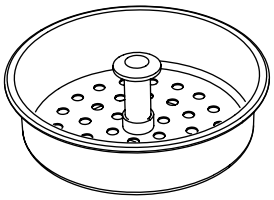 Metal Drainer

Tools Needed (But Not Included):

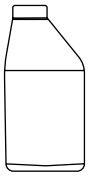 Latex or 100% Silicone Caulk	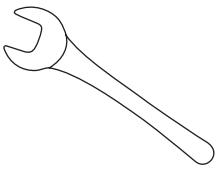 Hex Nut Wrench	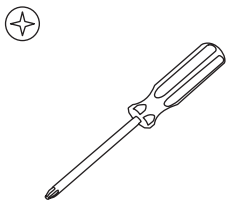 Phillips Head Screwdriver

NOTE:
We highly recommend using two people to install your Medical Sink.

Step 1:

A. Before installing your Medical Sink (1), apply a bead of caulk around the edge of the cutout.

B. Line up and insert the Medical Sink (1) into the cutout and apply even pressure from both sides.

C. Grab your Sink Clips (D) and partially thread the included screws into each clip.

D. Under the sink, you will see mounting rails; slide your Sink Clips (D) in between the rails.

- **a.** The clips need to be evenly placed around the entire bottom of the sink.
- **b.** There should be two on each side, two on the back and two on the front.

E. Slowly start securing every other clip, working in a clockwise formation, and tighten the screws until the Medical Sink (1) is drawn down to the countertop.

- **a.** All clips should be secured in place.
- **b.** Do not over-tighten them.
- **c.** Wipe off any excess adhesive from the top of the sink.

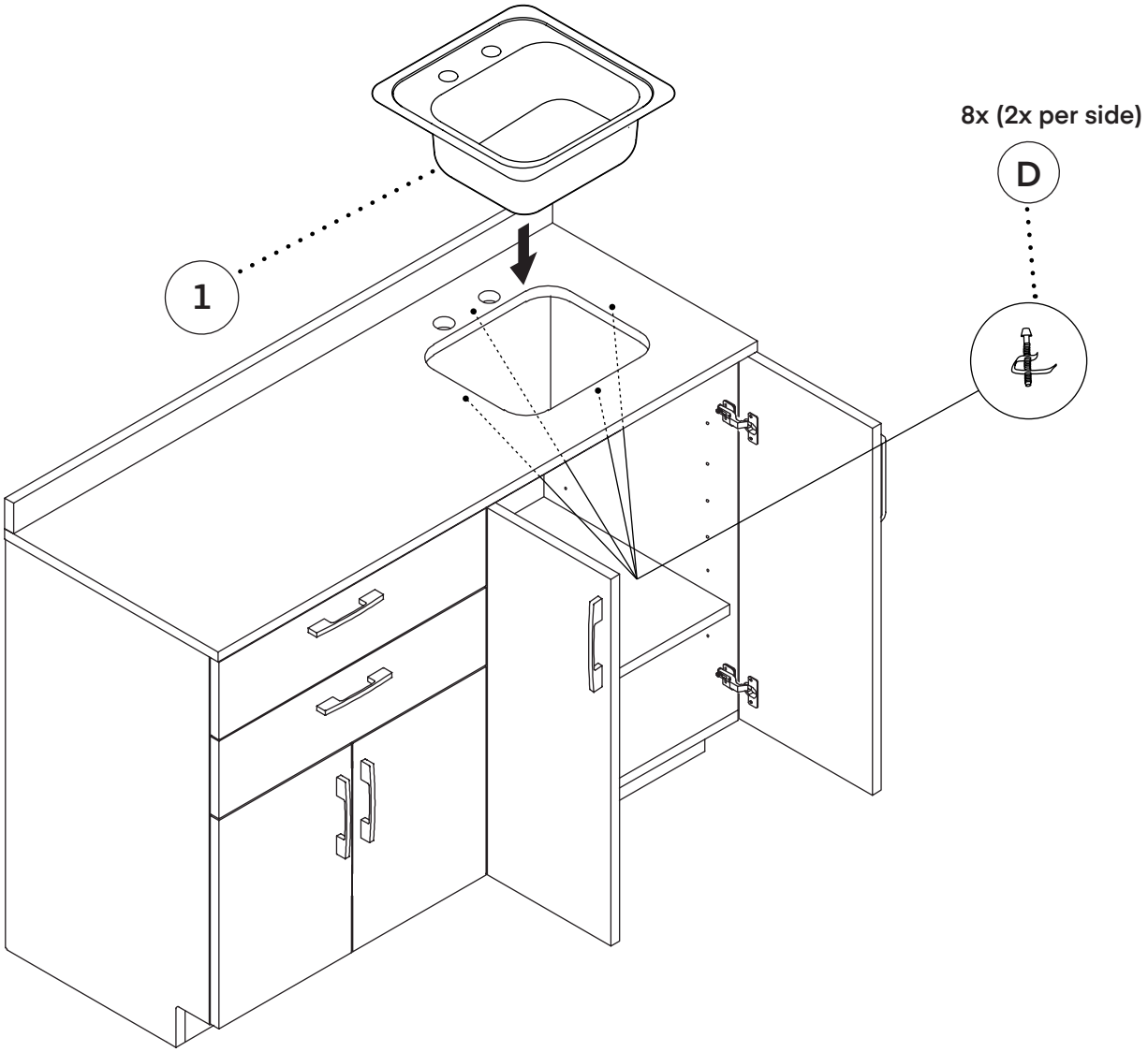

Step 2:

A. Locate your Faucet and Handles (2) and remove the following hardware on the bottom of the handles.

a. Two Rubber Washers (A).

b. Two Metal Washers (B).

c. Two Hex Nuts (C).

B. Place the Faucet and Handles (2) into the holes on top of the sink.

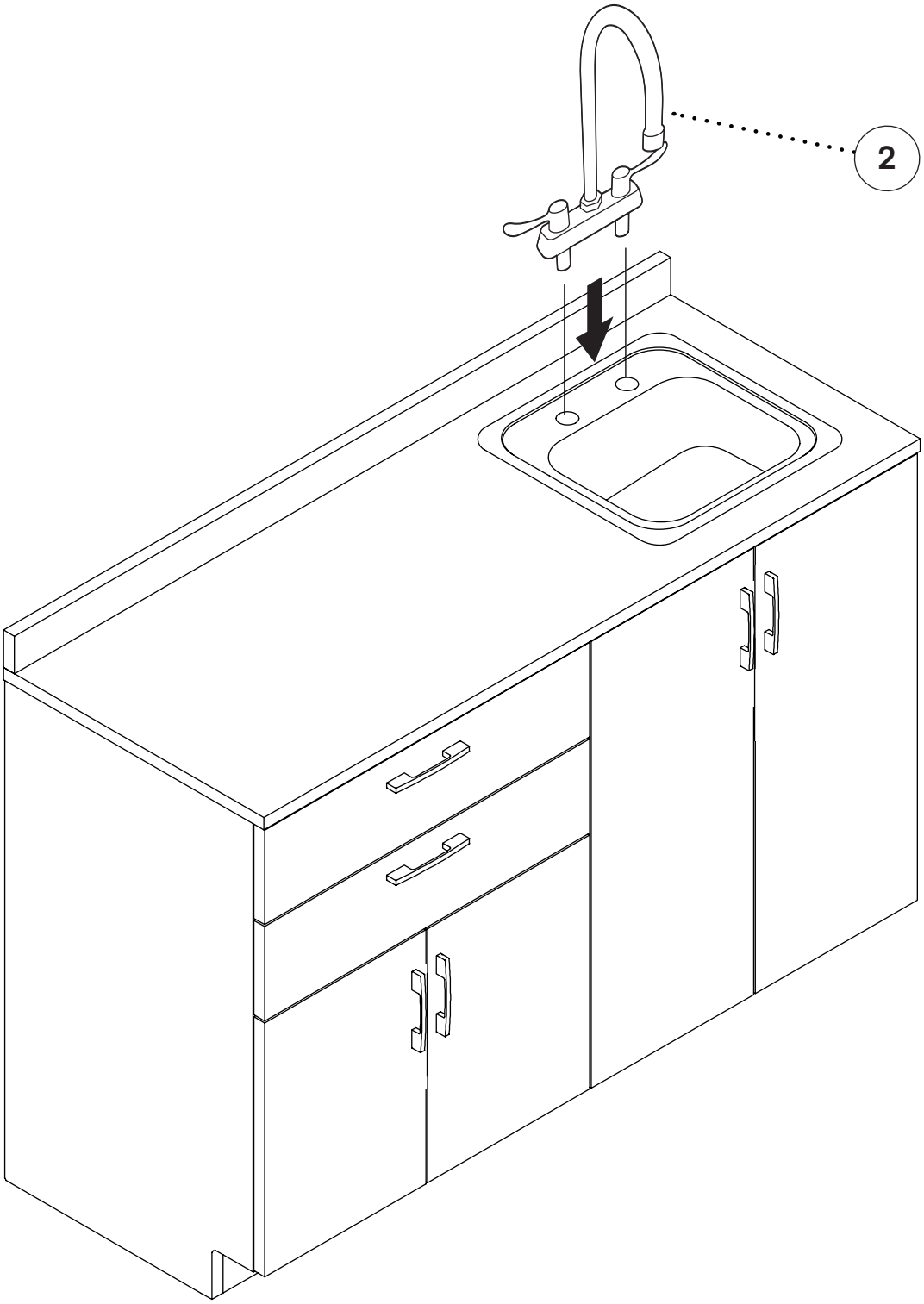

Step 3:

A. Open your cabinet door on your base cabinet and go under the countertop.

B. Secure a Rubber Washer (A) to one of the metal threads that connect to the handles.

C. Then secure a Metal Washer (B) and the Hex Nut (C).

a. For the Hex Nut (C), do not fully tighten just yet.

D. Repeat the above steps for the other handle.

E. Once all the hardware is on, firmly secure the Hex Nuts (C).

F. Locate your included drainer and unscrew the included M6 x 20 mm Screw (G) from it.

a. You should have the Plastic Drainer (E), a Rubber Washer (Drainer) (F), an M6 x 20 mm Screw (G), and a Metal Drainer (H).

G. Place the Rubber Washer (Drainer) (F) over the hole in your sink.

H. Next, place the Metal Drainer (H) on top of the Rubber Washer (Drainer) (F).

I. Place the Plastic Drainer (E) underneath the sink to match up with the hole.

a. Insert the M6 x 20 mm Screw (G) through the top of the Metal Drainer (H) and into the Plastic Drainer (E).

b. Secure the screw in place with a Philips head screwdriver.

J. Your Medical Sink (1) is now ready for plumbing to be installed.

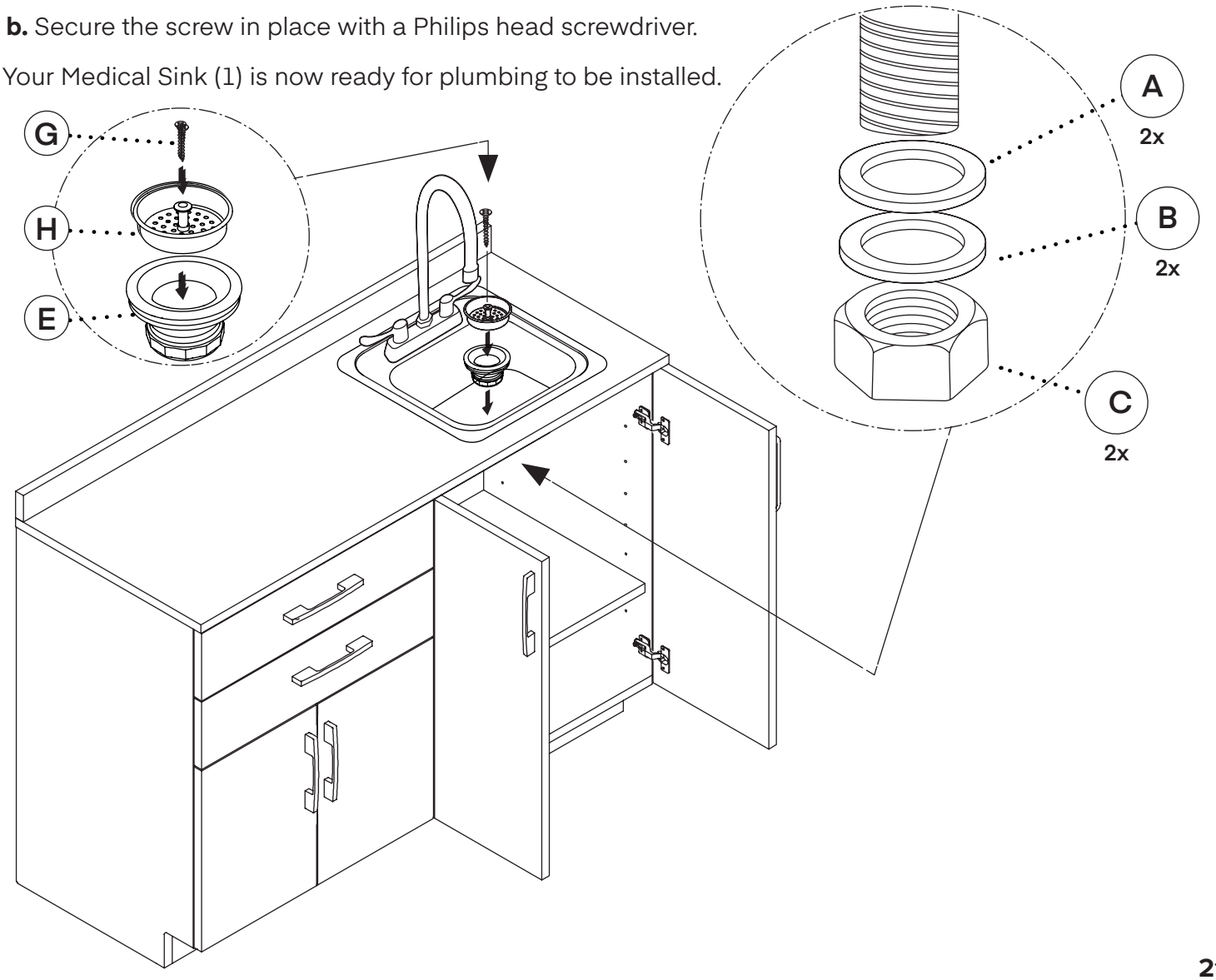

Warranty

1. Viva Comfort (the "Company" or "Tiger Companies") warrants to the purchaser that the product will be free from defects in workmanship and materials for a period of 1 year from the date of purchase. The warranty period is not extended if we repair, replace, exchange, or provide a refund for the product (as determined in our sole discretion). We may change the availability of this limited warranty at our discretion, but any changes will not be retroactive.
2. These warranties are not assignable or transferable to any other person, including, without limitation, any subsequent owner or other transferee of the product.
3. This Warranty does not apply to: (a) damage caused by misuse, tampering, abuse, neglect, or accident; (b) damage caused by improper installation, modification, or service; (c) alteration of the serial number; or (d) use that violates the instructions furnished by the Company will void this warranty.
4. The sole responsibility of the Company shall be limited to (a) the repair or replacement (in its sole discretion) of any component of the product which fails to conform to this; (b) a refund the purchase price of such product (in its sole discretion), at no cost to the purchaser for the period of the warranty, or (c) an exchange for a similar product, comparable in function and price.
5. Contact the Company directly at 1-(800)-805-1790 to obtain service under this warranty. If it becomes applicable to send a defective product to the Company, a Return Authorization Number must first be obtained from the Company. In order to obtain service under this warranty, purchaser may be required to provide the Company with the following items (a) proof of purchase, (b) photographs and or videos (of the damage, and (c) a written testimonial describing the defect.
6. Products shipped without prior Return Authorization and Return Authorization Number may not be accepted, and the Company will not be responsible for their disposition and/or cost of return to the owner.
7. The Company will not assume any responsibility for any loss or damage incurred in shipping and or delivery.
8. The product(s) must be returned within 14 calendar days of receiving the return authorization from the Company and must include the original proof of purchase for the warranty to be honored.
9. Any implied warranties that the purchaser may have are limited to the duration of the warranties described above. There are no further warranties that extend or apply beyond the face hereof, and the Company expressly disclaims and excludes any and all warranties of merchantability or fitness for a particular purpose. Some states do not allow limitations on how long an implied warranty lasts, so the above limitation may not apply to you.
10. THE REMEDIES DESCRIBED ABOVE ARE YOUR SOLE AND EXCLUSIVE REMEDIES AND THE COMPANY'S ENTIRE LIABILITY FOR ANY BREACH OF THIS LIMITED WARRANTY. OUR LIABILITY SHALL UNDER NO CIRCUMSTANCES EXCEED THE ACTUAL AMOUNT PAID BY YOU FOR THE DEFECTIVE PRODUCT, NOR SHALL WE UNDER ANY CIRCUMSTANCES BE LIABLE FOR ANY CONSEQUENTIAL, INCIDENTAL, SPECIAL OR PUNITIVE DAMAGES OR LOSSES, WHETHER DIRECT OR INDIRECT. SOME STATES DO NOT ALLOW THE EXCLUSION OR LIMITATIONS OF INCIDENTAL OR CONSEQUENTIAL DAMAGES, SO THE LIMITATION MAY NOT APPLY TO YOU.
11. This warranty gives you specific legal rights, and you may also have additional rights which vary from state to state.

Notes

ADIME902-72-LS-GRY

© 2025 Viva Comfort

vivacomfort.com