Installation Steps：

①

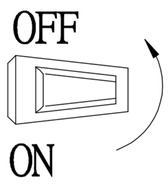

1. Turn off the power.

②

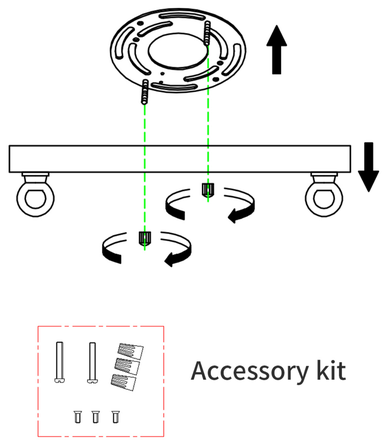

2. unscrew the two discs and then install the two accessories (F).

③

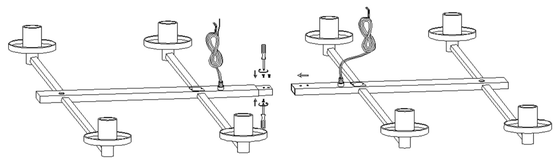

3. Join the two ends of the light frame (K & L), stuff the extra power cord into it, tighten the machine wire (J) with a screwdriver on the top and bottom, and the frame assembly is complete.

④

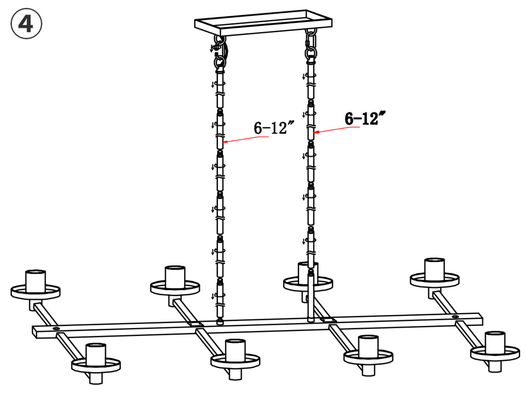

4. Both sides of the power cord need to pass through the six straight pipe (I), the last one must be a straight pipe with a hanging ring (H). Twist the straight pipe from the bottom to the top, twist it to make sure that the power cord passes through the middle of each pipe, and finally set the movable buckle (G) into the hanging ring of the square box (E) and the hanging ring of the straight pipe and twist it tightly. The installation method is the same for both sides.

⑤

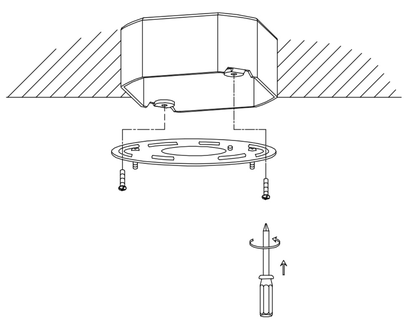

5. Use two machine wire (B) to tighten the pegboard (D) with the junction box (A) and install the pegboard (D).

⑥

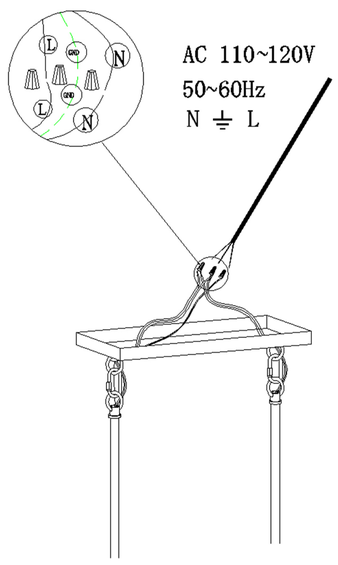

6. Correspond and connect the positive, negative and ground wires with the power line, and wrap the terminal cap (C) with adhesive tape.

⑦

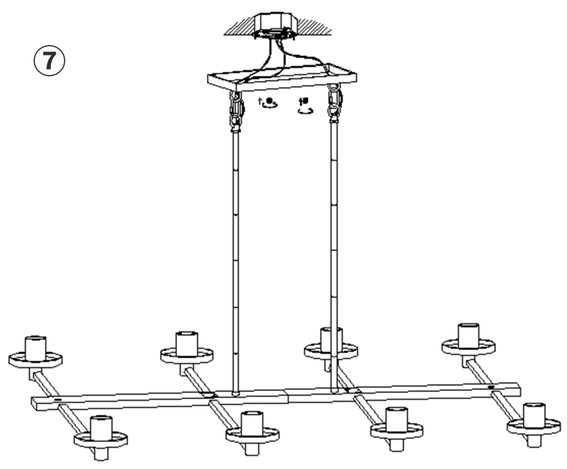

7. Lift the whole lamp upward, align the two holes on the square box (E) with the machine wire (B) on the pegboard (D), then tighten the accessories (F) and hang the lamp holder.

⑧

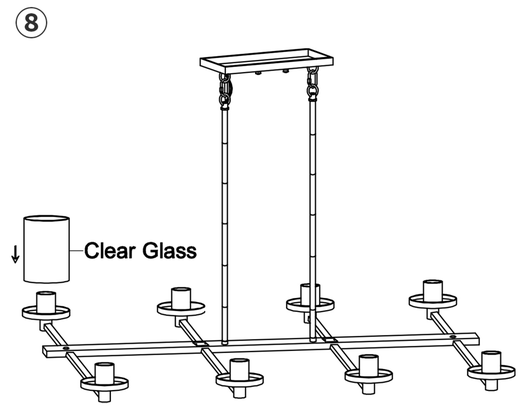

8. Install the glass cover (M).

⑨

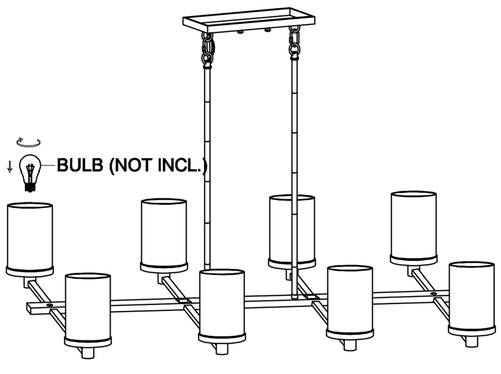

9. Install the bulb.

⑩

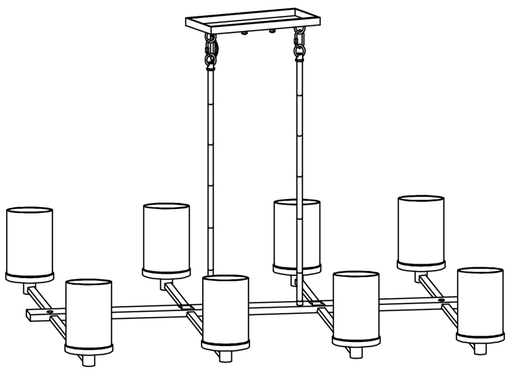

10. Finish the installation and turn on the light.

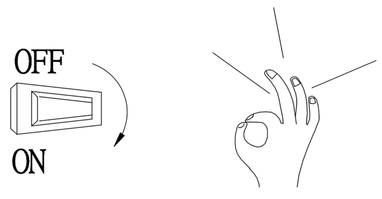

Notice： This light fixture should be installed in accordance with all applicable, local installation codes, and by a person familiar with the construction and operation of it, as well as the hazards involved. Inspect items and contents carefully. If any damage or defect is found, do not install it.

Accessories：
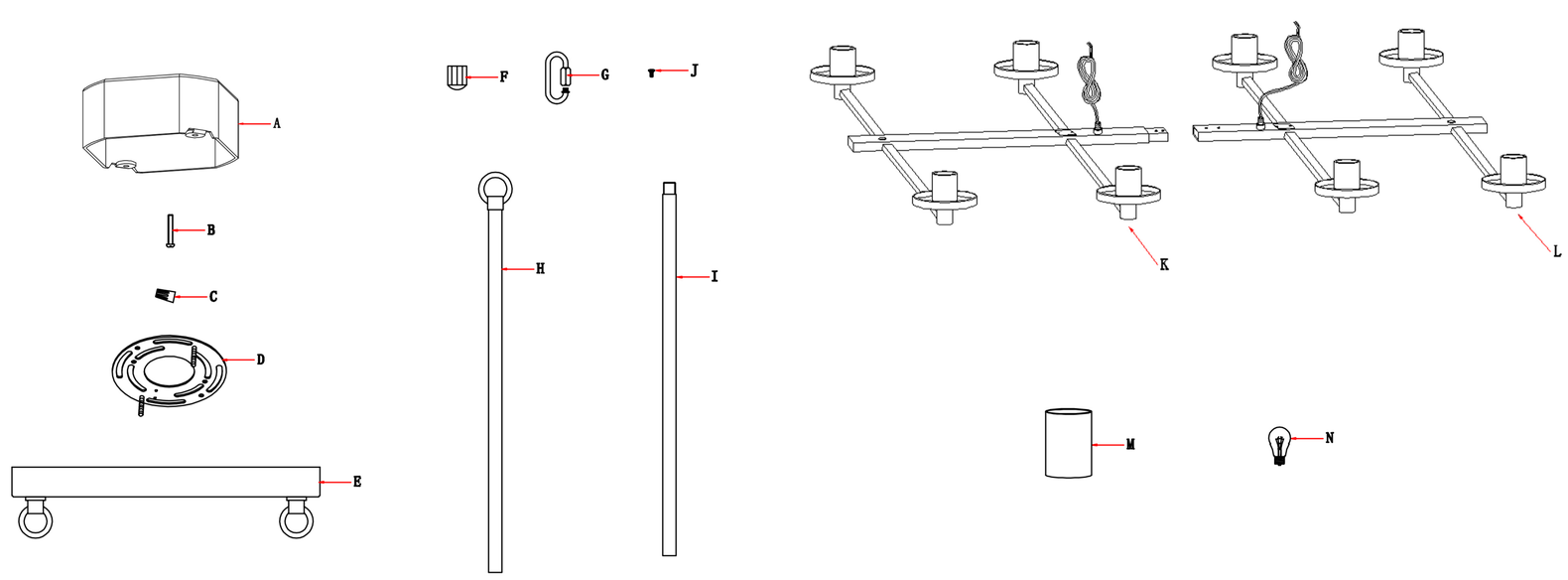
A: Junction box*0
B: Inch cross plate head machine wire*2
C: U.S. standard wiring cap * 3
D: eight hanging plate * 1
E: square box * 1
F: decorative grain * 2
G: activity buckle * 2
H: hanging ring + straight pipe * 2
I: Straight pipe *10
J: cross countersunk machine wire * 3
K: light frame * 1
L: Lamp stand *1
M: Clear glass*8
N: Bulb*0