Instructions for Use

Up & down and Headrest adjustment

Tilt adjustment

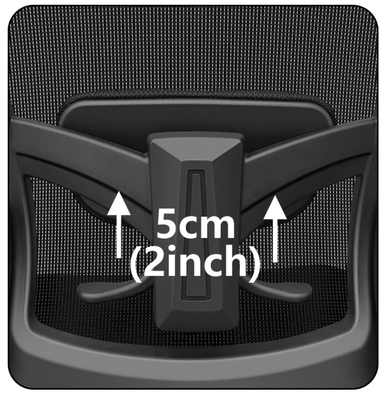

Backrest adjustment

Thanks for purchasing our products. Please read this manual before assembly. And please assemble in order. After the assembly, keep the instruction properly. Make sure all the parts are included (15 kinds in total).

Accessories List

(1) Headrest	**(2) Backrest**	**(3) Seat Cushion**	**(4) Foot Stool**	**(5) 5 Castors**
(6) Air Rod	**(7) 2 Armrests**	**(8) Base Plate**	**(9) 4 Screws (M6X30mm)**	**(10) 6 Decoration Caps**
(11) 4 Screws (M6X35mm)	**(12) 4 Screws (M6X18mm)**	**(13) 2 Screws (M6X25mm)**	**(14) Hexagon Wrench**	**(15) 4 Gaskets**

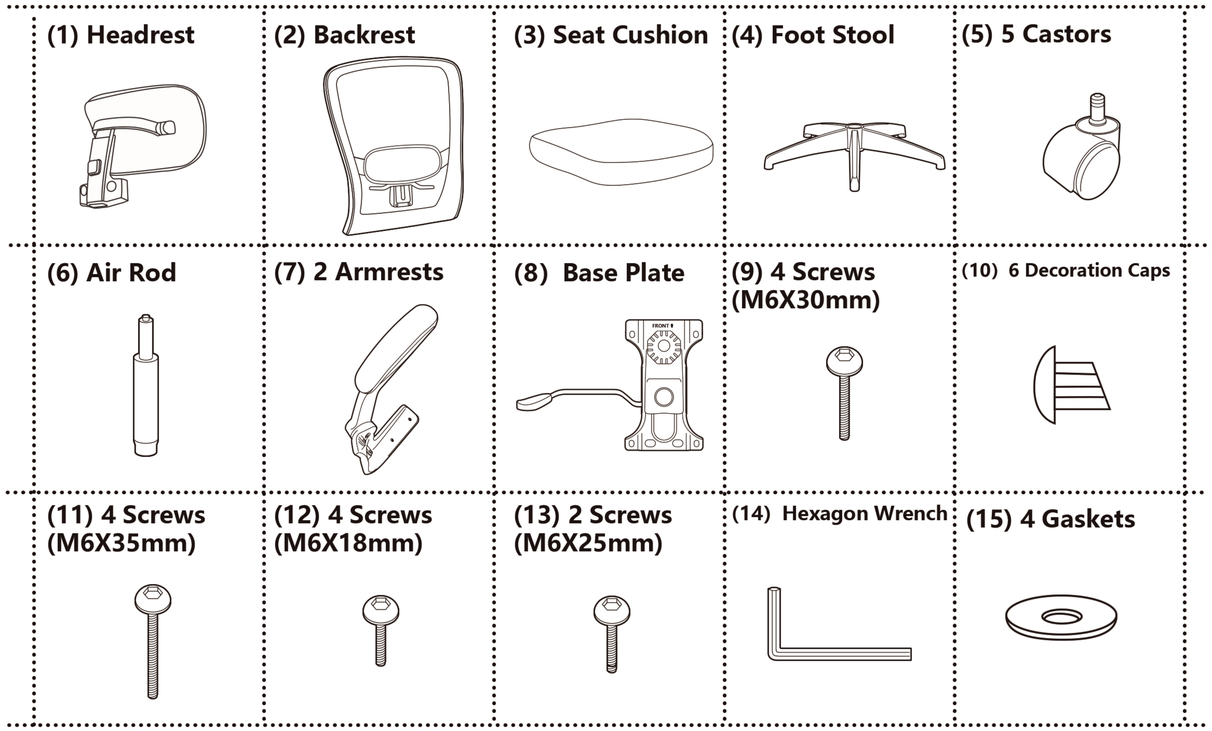

Notice

- This is a single chair, so please do not seat 2 or more persons, just seat only one person.
- Do not stand on the chair.
- Do not sit reverse or sit outside of the seat cushion.
- Check the screws once every 6 months, to make sure the screws are tight. Do not use the chair when the screws are loose.
- Please assemble according to the instructions.

Assembly Instruction

Please assemble in a wide and flat place.

Step 1

Insert Castors (5) into Foot Stool (4). There are 5 Castors (5) need to be inserted.

* Caution: Confirm the Castors (5) must be inserted into the innermost. Otherwise the castors could easily fall out and the chair could fall down.

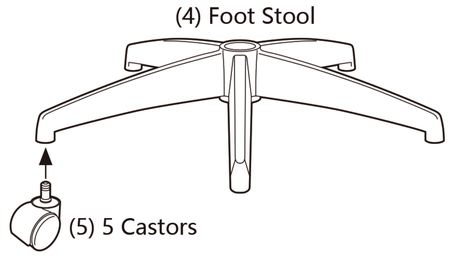

Step 2

Insert Air Rod (6) into the hole of Foot Stool (4). Put it aside and we'll use it in Step 6.

* Caution: Please insert Air Rod (6) straightly, and then press Air Rod (6) firmly into Foot Stool (4).

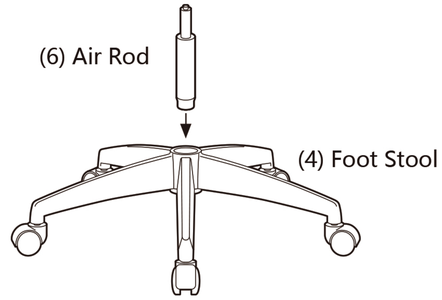

Step 3

Tighten the Screws M6X30mm (9) with Hexagon Wrench(14) to fix 2 Armrests(7) to the back of Backrest(2). Tighten the 4 screws firmly and then cover the screws with Decoration Caps (10).

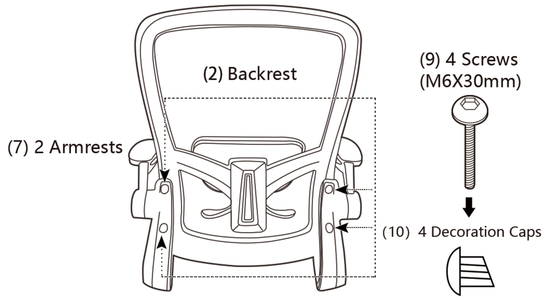

Step 4

After Step 3, fix the bottom of the Armrests (7) to the back of Seat Cushion (3). Tighten the Screws M6X35mm (11) Gasket (15) with Hexagon Wrench (14) firmly.

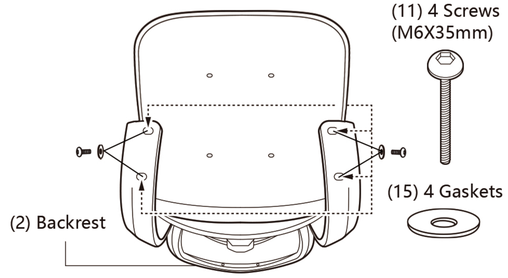

Step 5

Fix Base Plate (8) to the bottom of Seat Cushion (3).Tighten the Screws M6X18mm (12) with Hexagon Wrench (14) firmly.

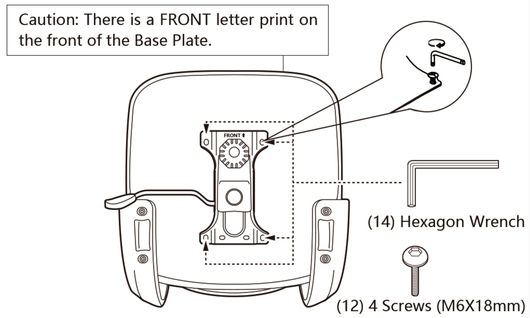

Step 6

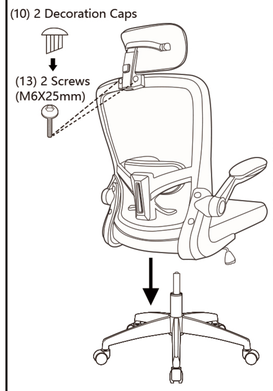

Pick up the Step 2's Air Rod (6) and Foot Stool (4). Insert the Air Rod (6) into Step 5's Base Plate (8). There's a hole in the middle of Base Plate (8). Press the Seat Cushion (3) from top to bottom, use your whole body's strength to insert it firmly. Then,alige the Headrest(1) with the screw holes on the top of the Backrest(2),and tighten the 2 screws M6X25mm (13) firmly and then cover the screws with Decoration Caps (10), the assembly is complete now.

* Caution: If the Air Rod (6) doesn't insert to Base Plate (8) firmly, it's likely to fall down when the chair raises up.