PYLE®

PyleUSA.com

# DIGITAL PROJECTOR




## INSTRUCTION MANUAL

Model: **PRJLEDLP205**

# FCC Notice

This equipment has been tested and found to comply with the limits for a Class B digital device, pursuant to part 15 of the FCC Rules. These limits are designed to provide reasonable protection against harmful interference in residential installation. This equipment generates, uses and can radiate radio frequency energy and if not installed and used in accordance with the instructions, may cause harmful interference to radio communications. However, there is no guarantee that interference will not occur in a particular installation. If this equipment does cause harmful interference to radio or television reception, detectable by turning the equipment in question off and on, the user is encouraged to try to correct the interference by one or more of the following measures:

- Reorient or relocate the receiving antenna
- Increase the distance between the equipment and the receiver
- Connect the equipment to an outlet on a different circuit than that which the receiver is connected to
- Or consult the dealer or an experienced radio/TV technician for help.

This device complies with Part 15 of the FCC Rules. Operation is subject to following two conditions:

1. This device may not cause harmful interference, and
2. This device must accept any interference that may cause undesired operation.

# Safety Instructions

Read all of these instructions before you operate your projector and save for future reference.

1. Read instructions
   All the safety and operating instructions should be read before the appliance is operated.
2. Notes and warnings
   All notes and warnings in the operating instructions should be adhered to.
3. Cleaning
   Unplug the projector from the wall socket before cleaning. Use a damp cloth for cleaning the projector housing. Do not use liquid or aerosol cleaners.
4. Accessories
   Do not place this product on an unstable cart, stand, or table. The product may fall, causing serious damage to the product.
   Keep the plastic packing materials (from the projector, accessories and optional parts) out of the reach of children as these bags may result in death by suffocation. Be particularly careful around the small children.
5. Ventilation
   The projector is equipped with ventilation holes (intake) and ventilation holes (exhaust). Do not block or place anything near these slots, or internal heat build-up may occur, causing picture degradation or damage to the projector.
6. Power sources
   Check that the operating voltage of your unit is identical with the voltage of your local power supply.
7. Servicing
   Do not attempt to service this projector yourself. Refer all servicing to qualified service personnel.
8. Replacement parts
   When replacement parts are required, be sure that the replacement parts are specified by the manufacture. Unauthorized substitutions may result in fire, electric shock or other hazards.
9. Moisture Condensation
   Never operate this projector immediately after moving it from a cold location to a warm one. When the projector is exposed to such a change in temperature, moisture may condense on the lens and the crucial internal parts. To prevent the unit from possible damage, do not use the projector for at least 2 hours when there is an extreme or sudden change in temperature.

# Notes on the AC Power Cord

AC Power Cord must meet the requirement of countries where you use this projector. Please confirm your AC plug type with the graphics below and ensure that the proper AC Power Cord is used. If the supplied AC Power Cord does not match your AC outlet, please contact your sales dealer. This projector is equipped with a grounding type AC line plug. Please ensure that your outlet fits the plug. Do not defeat the safety purpose of this grounding type plug. We highly recommend using a video source device also equipped with a grounding type AC line plug to prevent signal interference due to voltage fluctuations.

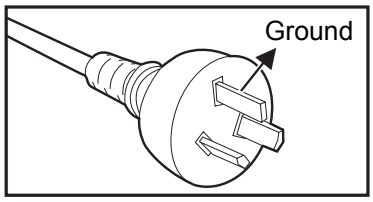


For Australia and Mainland China

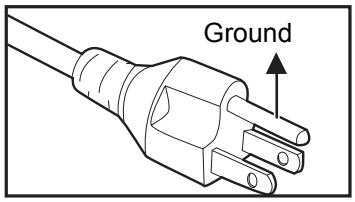


For the U.S.A. and Canada

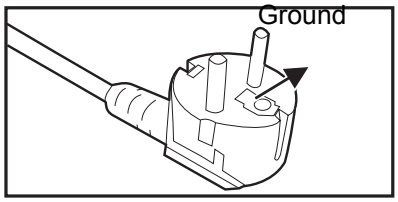


For Continental Europe

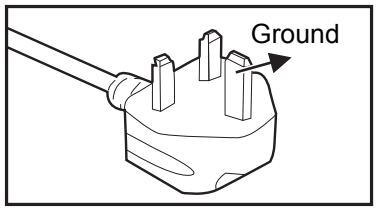


For the U.K.

# Contents


## Introduction ..... 5

Projector Features ..... 5
Projector Overview ..... 6

## Using the Product ..... 8

Control Panel ..... 8
Connection Ports ..... 9
Remote Control ..... 10
Installing the Batteries ..... 13
Remote Control Operation ..... 14

## Connection ..... 15

Connecting a computer ..... 16
Connecting Video source devices ..... 16

## Operation ..... 18

Powering On/Off the Projector ..... 18
Adjusting the Projector Height ..... 19
Adjusting the Projector Zoom and Focus ..... 19
Adjusting Projection Image Size ..... 20
Menu Operation ..... 21

## Maintenance ..... 29

Cleaning the Lens ..... 29
Cleaning the Projector Housing ..... 29
Replacing the Lamp ..... 30

## Specifications ..... 32

Dimensions ..... 33

## Appendix ..... 34

LED Indicator Messages ..... 35
Compatibility Modes ..... 35
Troubleshooting ..... 36
RS-232 Command and Configuration ..... 37
IR Control Table ..... 38

# Introduction

## Projector Features

The projector integrates high-performance optical engine projection and a user - friendly design to deliver high reliability and ease of use.
The projector offers the following features:

- Single chip 0.55" Texas Instruments DLP technology
- XGA (1024 x 768 pixels)
- Compatibility with Macintosh computers
- Compatibility with NTSC, PAL, SECAM and HDTV
- D-Sub 15-pin terminal for analog video connectivity
- User-friendly, multi-language on-screen display
- Advanced electronic keystone correction
- RS-232 connector for serial control
- Less than 0.5 W power consumption in standby mode
- SmartEco?mode lowers the po wer consumption to increase the lamp life hours

☞ ***Note***

- ***The information in this manual is subject to change without notices.***
- ***The reproduction, transfer or copy of all or any part of this document is not permitted without express written consent.***

# Projector Overview

## Front View

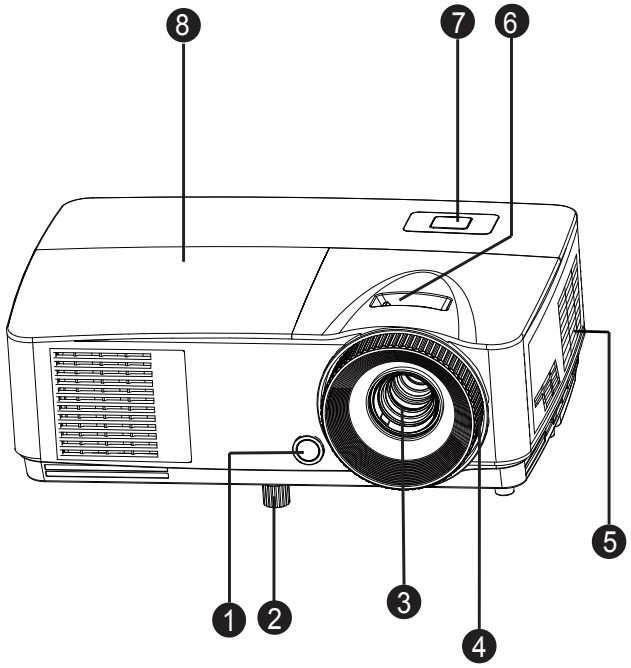


1. Front IR remote control sensor
2. Elevator foot
3. Projection lens
4. Focus ring
5. Ventilation holes
6. Zoom ring
7. Control panel
8. Lamp cover

## Rear View

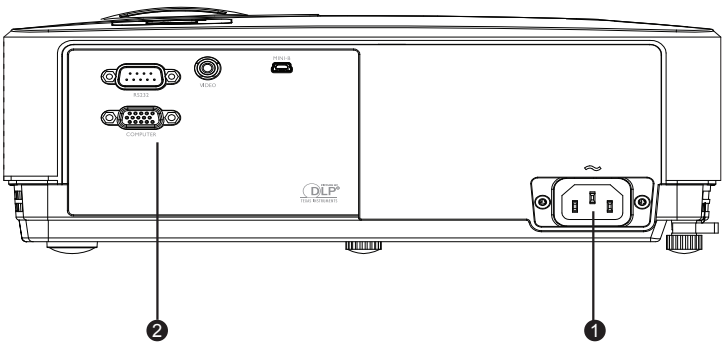


1. AC power socket
2. Connection ports

## Bottom View

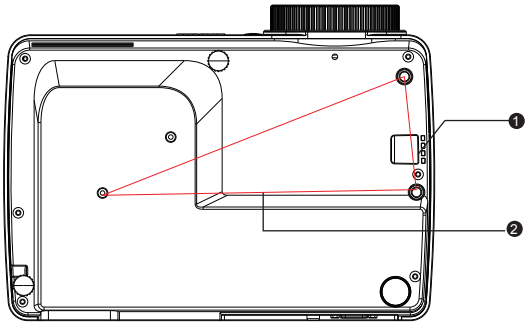


1. Security bar
2. Ceiling mount holes

☞ ***Note***

- ***This projector can be used with a ceiling mount for support. The ceiling mount is not included in the package.***
- ***Contact your dealer for information to mount the projector on a ceiling.***

# Using the Product

## Control Panel

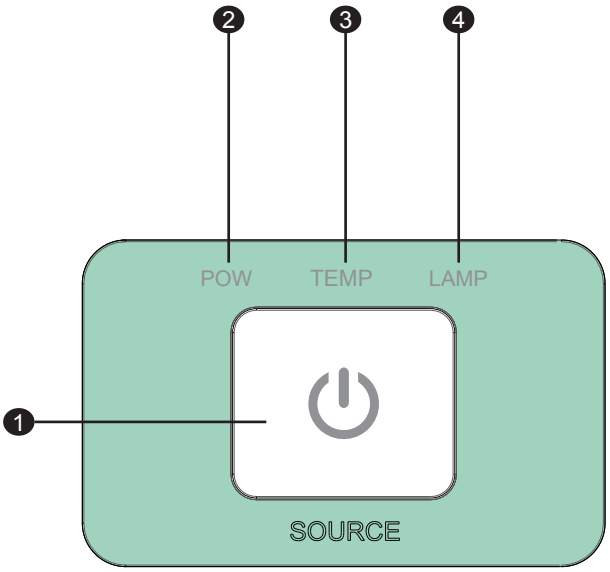


1. **电源 (Power)**
   Turn the projector on or off
2. **电源 (Pow )** (Power LED indicator)
   Refer to “LED Indicator Messages”.
3. **温度 (Temp)** (Temp LED indicator)
   Refer to "LED Indicator Messages”.
4. **灯泡 (Lamp)** (Lamp LED indicator)
   Refer to "LED Indicator Messages”.

# Connection Ports

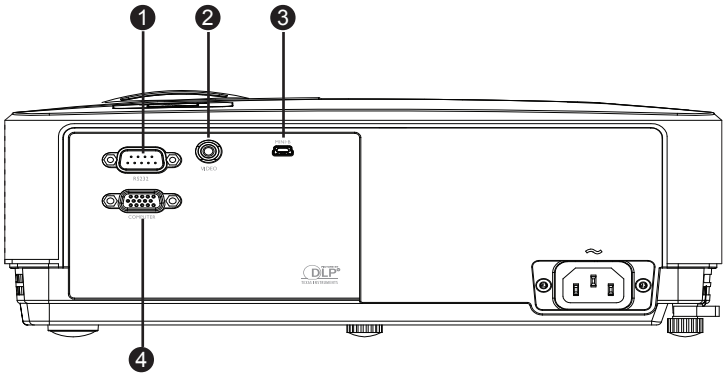


1. **RS-232**
   When operating the projector via a computer, connect this to the controlling computer's RS-232C port.
2. **VIDEO**
   Connect composite video output from video equipment to this jack.
3. **TYPE B USB**
   This connector is for firmware update.
4. **COMPUTER**
   Connect image input signal (analog RGB or component) to this jack.

# Remote Control

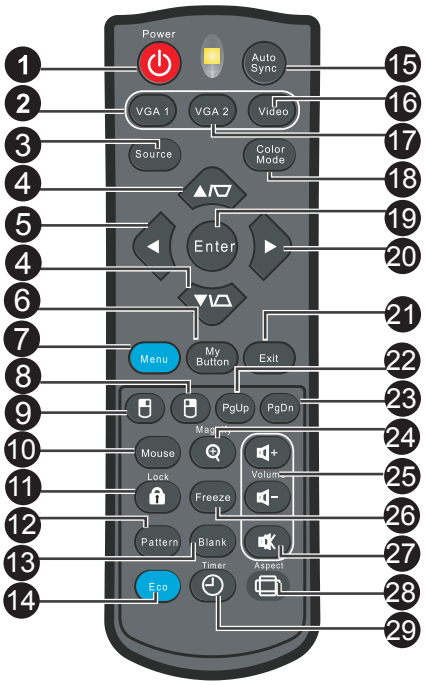


1. **Power**
   Turn the projector on or off.
2. **VGA1**
   Display COMPUTER IN 1 signal.
3. **Source**
   Display the source selection bar.
4. **Keystone/Arrow keys ( ▲ /Up, ▼ /Down)**
   Manually correct distorted images resulting from an angled projection.
5. **◄ Left**
   When the On-Screen Display (OSD) menu is activated, the #4, #5, and #20 keys are used as directional arrows to select the desired menu items and to make adjustments.
6. **My Button**
   No function.
7. **Menu**
   Display on-screen display menus.
8. **Right mouse**
   No function.
9. **Left mouse**
   No function.

**10. Mouse**

No function.

**11. Lock**

No function.

**12. Pattern**

No function.

**13. Blank**

Hide the screen picture.

**14. Eco**

Decreases the power consumption of the lamp by up to 70%.
Note: It takes some time to initiate this function. Make sure the projector has been turned on for more than 4 minutes.

**15. Auto Sync**

Automatically determines the best picture timings for the displayed image.
Note: Switch input source to Composite/ Video by sequence.

**16. Video**

Switch input source to Composite/S-Video by sequence.

**17. VGA2**

Display COMPUTER IN 1 signal.

**18. Color Mode**

Select the picture setup mode.

**19. Enter**

Confirmed selections.

**20. ► Right**

When the On-Screen Display (OSD) menu is activated, the #4, #5, and #20 keys are used as directional arrows to select the desired menu items and to make adjustments.

**21. Exit**

Goes back to previous OSD menu.

**22. Page Up**

Perform page up function when mouse mode is activated.

**23. Page Down**

Perform page down function when mouse mode is activated.

**24. Magnify**

Magnifies the projected picture size.

**25. Volume**

No function.

**26. Freeze**

Freeze the projected image.

**27. Mute**

No function.

**28. Aspect**

Select the display aspect ratio.

**29. Timer**

Activate P-Timer OSD menu.

## Using the remote mouse control

Connect the projector to your PC or notebook with a USB cable prior to using the paging the paging function.

You can operate your display software program (on a connected PC) which responds to page up/down commands (like Microsoft PowerPoint) by pressing Page Up/Down on the remote control.

If remote paging function doesn't work, check if the USB connection is correctly made and the mouse driver on your computer is updated to the latest version.

# Installing the Batteries

1. Open the battery cover in the direction shown.

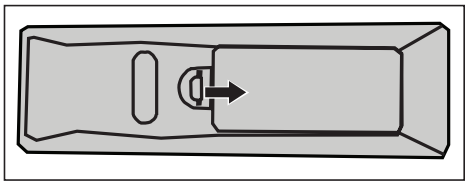

2. Install batteries as indicated by the diagram inside the compartment.

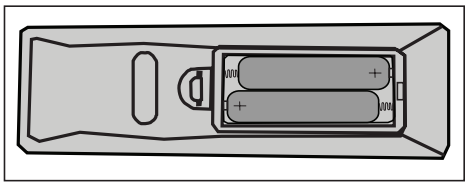

3. Close the battery cover into position.

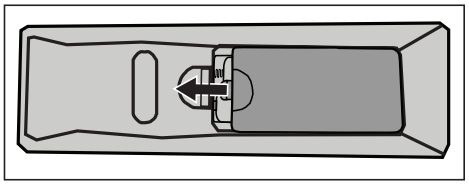

### ⚠ *Caution*

- ***Risk of explosion if battery is replaced by an incorrect type.***
- ***Dispose of used batteries according to the instructions.***
- ***Make sure the plus and minus terminals are correctly aligned when loading a battery.***

### ☞ *Note*

- ***Keep the batteries out of the reach of children.***
- ***Remove batteries from remote control when not using for extended periods.***
- ***Do not charge the battery or throw it into fire or water.***
- ***Do not dispose of the used batteries along with household waste. Dispose of used batteries according to local regulations.***
- ***Danger of explosion may happen if batteries are incorrectly replaced. Replce all the batteries with new ones.***
- ***Batteries should not be in or near to fire or water, keep batteries in a dark, cool and dry place.***
- ***If suspect battery leakage, wipe out the leakage and then replace new batteries. If the leakage adheres to your body or clothes, rinse well with water immediately.***

# Remote Control Operation

Point the remote control at the infrared remote sensor and press a button.

- Operating the projector from the front

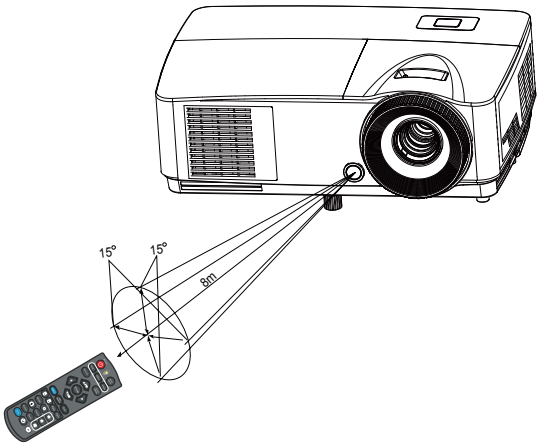


☞ ***Note***

- ***The remote control may not operate when there is sunlight or other strong light such as a fluorescent lamp shining on the remote sensor.***
- ***Operate the remote control from a position where the remote sensor is visible.***
- ***Do not drop the remote control or jolt it.***
- ***Keep the remote control out of locations with excessively high temperature or humidity.***
- ***Do not get water on the remote control or place wet objects on it.***
- ***Do not disassemble the remote control.***

# Connection

When connecting a signal source to the projector, be sure to:

1. Turn all equipment off before making any connections.
2. Use the correct signal cables for each source.
3. Ensure the cables are firmly inserted.

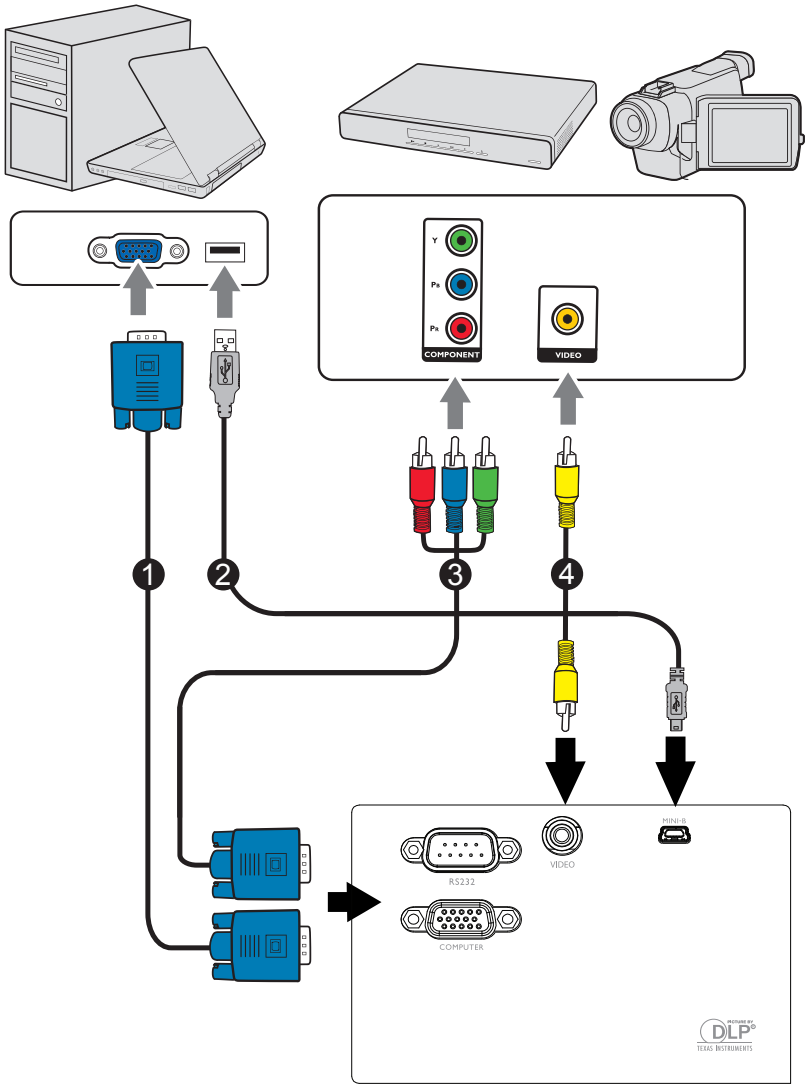


| | |
|---|---|
| 1. VGA cable | 2. USB cable |
| 3. VGA (D-Sub) to HDTV (RCA) cable | 4. Composite Video cable |

☞ ***Important***

- ***In the connections shown above, some cables may not be included with the projector (see included "Packing List"). They are commercially available from electronics stores.***
- ***The connection illustrations above are for reference only. The rear connecting jacks available on the projector vary with each projector model.***

# Connecting a computer or monitor

## Connecting a computer

The projector provides two VGA input sockets that allow you to connect them to both IBM® compatibles and Macintosh® computers. A Mac adapter is needed if you are connecting legacy version Macintosh computers.

**To connect the projector to a notebook or desktop computer:**

1. Take the supplied VGA cable and connect one end to the D-Sub output socket of the computer.
2. Connect the other end of the VGA cable to the **COMPUTER** signal input socket on the projector.

☞ ***Important***

- ***Many notebooks do not turn on their external video ports when connected to a projector. Usually a key combo like FN + F3 or CRT/LCD key turns the external display on/off. Locate a function key labeled CRT/LCD or a function key with a monitor symbol on the notebook. Press FN and the labeled function key simultaneously. Refer to your notebook's documentation to find your notebook's key combination.***

# Connecting Video source devices

You need only connect the projector to a Video source device using just one of the above connecting methods, however each provides a different level of video quality. The method you choose will most likely depend upon the availability of matching terminals on both the projector and the Video source device as described below:

| Terminal name | Terminal appearance | Reference | Picture quality |
|---|---|---|---|
| Component Video | COMPUTER  | "Connecting a Component Video source device" on page 17 | Better |
| Video | VIDEO  | "Connecting a composite Video source device" on page 17 | Good |

## Connecting a Component Video source device

Examine your Video source device to determine if it has a set of unused output jacks available:

- If so, you can continue with this procedure.
- If not, you will need to reassess which method you can use to connect to the device.

**To connect the projector to a Component Video source device:**

1. Take a Component Video to VGA (D-Sub) adaptor cable and connect the end with 3 RCA type connectors to the Component Video output jacks of the Video source device. Match the color of the plugs to the color of the jacks; green to green, blue to blue, and red to red.
2. Connect the other end of the Component Video to VGA (D-Sub) adaptor cable (with a D-Sub type connector) to the **COMPUTER** jack on the projector.

☞ **Important**

- ***If the selected video image is not displayed after the projector is turned on and the correct video source has been selected, check that the Video source device is turned on and operating correctly.***

## Connecting a composite Video source device

Examine your Video source device to determine if it has a set of unused composite Video output sockets available:

- If so, you can continue with this procedure.
- If not, you will need to reassess which method you can use to connect to the device.

**To connect the projector to a composite Video source device:**

1. Take a Video cable and connect one end to the composite Video output socket of the Video source device.
2. Connect the other end of the Video cable to the **VIDEO** socket on the projector.

☞ ***Important***

***If the selected video image is not displayed after the projector is turned on and the correct video source has been selected, check that the Video source device is turned on and operating correctly. Also check that the signal cables have been connected correctly.***

# Operation

## Powering On/Off the Projector

### Powering On the Projector:

1. Complete the AC power cord and peripheral signal cable(s) connections.
2. Press ⏻ to turn on the projector.
   The projector takes a minute or so to warm up.
3. Turn on your source (computer, notebook, DVD, etc.). The projector automatically detects your source.
   - If you are connecting multiple sources to the projector simultaneously, press **SOURCE** on the projector or **Source** on the remote control to select your desired signal or press your desired signal key on the remote control.

⚠ ***Warning***

- ***Never look into the lens when the lamp is on. This can damage your eyes.***
- ***This focal point concentrates high temperature. Do not place any object near it to avoid possible fire hazard.***

### Powering Off the Projector:

1. Press ⏻ to turn off the projector lamp. You will see a message "Power off? Press Power again" appear on the screen.
2. Press ⏻ again to confirm.
   - When the Power LED flashes orange, the projector becomes normal power-down cooling.
   - When the Power LED becomes steady orange, the projector has entered stand-by mode.
   - If you want to turn the projector back on, you must wait until the projector has completed the cooling cycle and has entered stand-by mode. Once in stand-by mode, simply press ⏻ to restart the projector.
3. Disconnect the AC power cord from the electrical outlet and the projector.
4. Do not turn on the projector right after power off.

# Adjusting the Projector Height

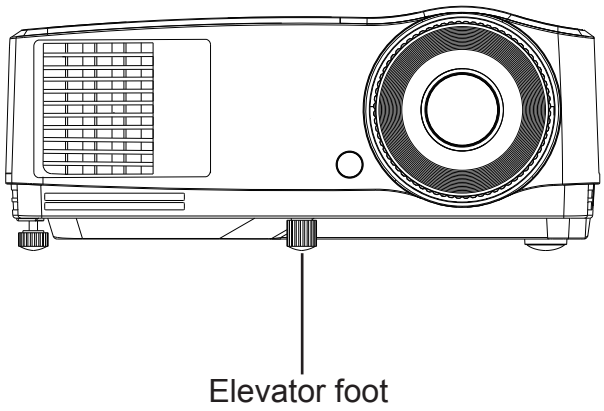


The projector is equipped with an elevator foot to adjust the image height. To raise or lower the image, turn the elevator foot to fine-tune the height.

# Adjusting the Projector Zoom and Focus

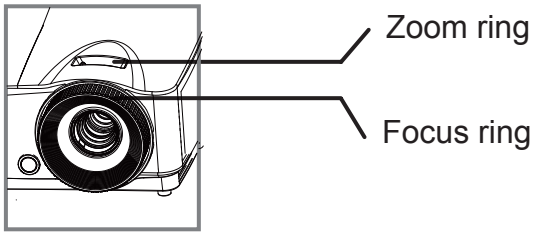


1. Focus the image by rotating the focus ring. A still image is recommended for focusing.
2. Adjust the image size by rotating the zoom ring.

# Adjusting Projection Image Size

Refer to the graphic and table below to determine the screen size and projection distance.

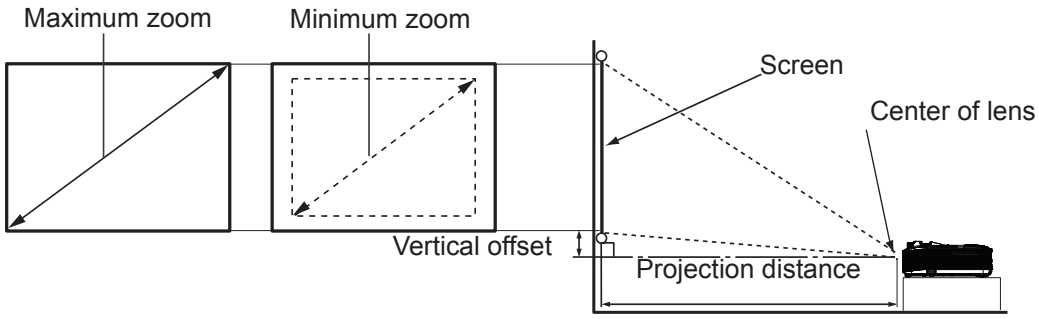


The screen aspect ratio is 4:3 and the projected picture is 4:3

| Screen size | | | | Projection distance (mm) | | | Vertical offset (mm) |
|---|---|---|---|---|---|---|---|
| Diagonal | | W (mm) | H (mm) | Min distance (max. zoom) | Average | Max distance (min. zoom) | |
| Inch | mm | | | | | | |
| 35 | 889 | 711 | 533 | 1401 | 1472 | 1543 | 80 |
| 40 | 1016 | 813 | 610 | 1600 | 1680 | 1760 | 91 |
| 50 | 1270 | 1016 | 762 | 2000 | 2100 | 2200 | 114 |
| 60 | 1524 | 1219 | 914 | 2400 | 2520 | 2640 | 137 |
| 80 | 2032 | 1626 | 1219 | 3200 | 3360 | 3520 | 183 |
| 100 | 2540 | 2032 | 1524 | 4000 | 4200 | 4400 | 229 |
| 120 | 3048 | 2438 | 1829 | 4800 | 5040 | 5280 | 274 |
| 150 | 3810 | 3048 | 2286 | 6000 | 6300 | 6600 | 343 |
| 200 | 5080 | 4064 | 3048 | 8000 | 8400 | 8800 | 457 |
| 220 | 5588 | 4470 | 3353 | 8800 | 9240 | 9680 | 503 |
| 250 | 6350 | 5080 | 3810 | 10000 | 10500 | 11000 | 572 |
| 300 | 7620 | 6096 | 4572 | 12000 | 12600 | 13200 | 686 |

☞ ***Note***

- ***Position the projector in a horizontal position; other positions can cause heat build-up and damage to the projector.***
- ***Keep a space of 30 cm or more between the sides of the projector.***
- ***Do not use the projector in a smoky environment. Smoke residue may build-up on critical parts and damage the projector or its performance.***
- ***It is recommended that if you intend to permanently install the projector, you should physically test the projection size and distance using the actual projector in situ before you permanently install it, so as to make allowance for this projector's optical characteristics. This will help you determine the exact mounting position so that it best suits your installation location.***

# Menu Operation

The projector has multilingual on-screen display menus that allow you to make image adjustments and change a variety of settings.

## How to operate

1. Press the **Menu** button to open the OSD menu.
2. When OSD is displayed, use ▲ / ▼ to select any feature in the main menu.
3. After selecting the desired main menu item, press ▶ to enter sub-menu for feature setting.
4. Use ▲ / ▼ to select the desired item and adjust the settings with ◀ / ▶.
5. Press the **Menu** button, the screen will return to the main menu.
6. To exit OSD, press the **Menu** button again. The OSD menu will close and the projector will automatically save the new settings.

OSD Menu

| Main menu | Sub-menu | | Options |
|---|---|---|---|
| 1. DISPLAY | Wall Color | | Off /Light Yellow/Pink/Light Green/Blue/Blackboard |
| | Aspect Ratio | | Auto /Real/4:3/16:9/16:10 |
| | Auto Keystone | | On /Off |
| | Keystone | | |
| | Position | | |
| | Phase | | 0-31 |
| | H. Size | | -15 - +15 |
| | Digital Zoom | | |
| | 3D | 3D Mode | Auto/Top-Bottom/ Frame Sequential/ Frame Packing/ Side by Side/ Off |
| | | Apply 3D Settings | Off |
| | Teaching Template | Blackboard | Off /Letter Formation/ Worksheet/Coordinate Chart |
| | | Whiteboard | Off /Letter Formation/ Worksheet/Coordinate Chart |

| | | | |
|---|---|---|---|
| 2. PICTURE | Picture Mode | | Dynamic /Presentation /sRGB/Cinema / User 1 /User 2 |
| | Reference Mode | | Dynamic /Presentation /sRGB/Cinema |
| | Brightness | | |
| | Contrast | | |
| | Sharpness | | |
| | Tint | | |
| | Color Temperature | | Cool/Normal /Warm |
| | Color Temperature Fine Tuning | | R Gain/G Gain/B Gain/R Offset/G Offset/B Offset |
| | 3D Color Management | Primary Color | R/G/B/C/M/Y |
| | | Hue | |
| | | Saturation | |
| | | Gain | |
| | Reset Picture Settings | Current/All/ Cancel | |
| 3. SOURCE | Quick Auto Search | | On/Off |

| | | | |
|---|---|---|---|
| 4. SYSTEM SETUP: Basic | Presentation Timer | Timer Period | 1~240 minutes |
| | | Timer Display | Always /3 min/2 min/1 min/ Never |
| | | Timer Position | Top-Left /Bottom-Left/Top-Right/Bottom-Right |
| | | Timer Counting Direction | Count Down /Count Up |
| | Language | | English / Français / Deutsch Italiano / Español / Русский 繁體中文 /简体中文 /日本語 / 한국어/ Svenska / Nederlands / Türkçe/ Čeština / Português / ไทย / Polski Magyar/ Български/ Hrvatski/ Română/ Suomi/ Norsk/ Dansk /Indonesian/Ελληνικά / العربية / हिन्दी |
| | Projector Installation | | Front Table /Rear Table/Rear Ceiling/Front Ceiling |
| | Menu Settings | Menu Display Time | 5 sec/10 sec/ 20 sec/30 sec/ Always |
| | | Menu Position | Center /Top-Left/Top-Right/ Bottom-Right/Bottom-Left |
| | | Reminder Message | On /Off |
| | Operation Settings | Direct Power On | On/Off |
| | | Signal Power On | On/Off |
| | | Auto Power Off | Disable/3 min/10 min/15 min/20 min /25 min/30 min |
| | | Quick Cooling | On/Off |
| | | Instant Restart | On/Off |
| | | Blank Timer | Disable /5 min/10 min/15 min/20 min/25 min/30 min |
| | | Sleep Timer | Disable /30 min/1 hr/2 hr/3 hr/4 hr/8 hr/12 hr |
| | Background Color | | Black/Blue/Purple |
| | Splash Screen | | Black/Blue |

| | | | |
|---|---|---|---|
| 5. SYSTEM SETUP: Advanced | High Altitude Mode | On/Off | Yes/No |
| | Lamp Settings | Lamp Mode | Normal/Economic/SmartEco |
| | | Lamp Spa Mode | On/Off |
| | | Reset lamp timer | Reset/Cancel |
| | | Equivalent lamp hour | |
| | Security Settings | Change Password | |
| | | Change Security | Power On Lock |
| | Baud Rate | | 2400/4800/9600/14400/19200/ 38400/57600/ 115200 |
| | Test Pattern | | On/Off |
| | Closed Caption | | |
| | Reset All Settings | Reset/Cancel | |
| 6. INFORMATION | Current System Status | | • Source<br>• Picture Mode<br>• Resolution<br>• Lamp Mode<br>• 3D Format<br>• Color System<br>• Equivalent Lamp<br>• Firmware Version |

Note that the menu items are available when the projector detects at least one valid signal. If there is no equipment connected to the projector or no signal detected, limited menu items are accessible.

## DISPLAY

### Wall Corlor

Brighten or darken the image.

### Aspect Ratio

Select how the picture fits on the screen:

- Auto : Scales an image proportionally to fit the projector's native resolution in its horizontal or vertical width.
- Real: Minimizes the aspect ratio distortion by maintaining close to the original aspect ratio in the center of the image and distributing the majority of distortion at the edges of the displayed image.
- 4:3 : Scales an image so that it is displayed in the center of the screen with a 4:3 aspect ratio.
- 16:9 : Scales an image so that it is displayed in the center of the screen with a 16:9 aspect ratio.
- 16:10: Scale an image so that it is displayed in the center of the screen with a 16:10 aspect ratio.

### Auto Keystone

Automatically correct distorted images resulting from an angled projection.

### Keystone

Manually correct distorted images resulting from an angled projection.
Press Keystone ▲ / ▼ on the projector or remote control to display the Keystone correction page.
Press ▲ to correct keystone at the top of the image.
Press ▼ to correct keystone at the bottom of the image.

### Position

Adjust the image up or down or left or right within the projection area.

### Phase

Adjust the phase of the projector relative to the computer.

### Digital Zoom

Using the remote control

1. Press Magnify on the remote control to display the Zoom bar.
2. Press ◄/► to magnify the picture to a desired size.
3. Press "**Enter**" on the projector or remote control to switch to the paning mode and press the directional arrows to navigate the picture. The zoom bar needed to be shown on screen if we want to switch the paning mode.
4. To reduce size of the picture, press Magnify and press ◄ repeatedly until it is restored to the original size.

Using the OSD menu

1. Press **Menu** and then press ► until the Video/Audio menu is highlighted.
2. Press ► to highlight Zoom.
3. Repeat steps 2-4 in the section of Using the remote control above.

### 3D Settings

This projector features a 3D function which enables you to enjoy the 3D movies, videos, and sporting events in a more realistic way by presenting the depth of the images. You need to wear a pair of 3D glasses to view the 3D images.

### 3D Format

Use this function to choose an appropriate 3D format if the projector cannot recognize the 3D format.
If the 3D signal is input from an HDMI 1.4a compatible device, the projector detects the signal for 3D Sync information and once detected, it projects images in 3D format automatically. In other cases, you may need to manually select a 3D Sync format for the projector to project 3D images correctly.

☞ ***Note***

- ***3D Format will be available when 3D Sync is "On".***
- ***The default setting is "Auto" when input source is HDMI.***
- ***The default setting is "Side-by-Side" when input source is video or computer. "Auto" will be unavailable.***
- ***The brightness level of the projected image will decrease.***

### Picture

### Picture Mode

There are many factory presets optimized for various types of images.

- Dynamic mode : Maximizes the brightness of the projected image. This mode is suitable for environments where extra-high brightness is required, such as using the projector in well lit rooms.
- Presentation mode : Is designed for presentations. The brightness is emphasized in this mode.
- sRGB mode : Maximizes the purity of RGB colors to provide true-to-life images regardless of brightness setting. It is most suitable for viewing photos taken with an sRGB compatible and properly calibrated camera, and for viewing PC graphic and drawing applications such as AutoCAD.
- Cinema mode : Is appropriate for playing colorful movies, video clips from digital cameras or DVs through the PC input for best viewing in a blackened (little light) environment.
- User 1:Memorize user 1 defined settings.
- User 2:Memorize user 2 defined settings.

### Reference Mode

Select a picture mode that best suits your need for the image quality and further fine-tune the image. This function is only available when User 1 or User 2 is selected.

- Dynamic mode : Maximizes the brightness of the projected image. This mode is suitable for environments where extra-high brightness is required, such as using the projector in well lit rooms.
- Presentation mode : Is designed for presentations. The brightness is emphasized in this mode.
- sRGB mode : Maximizes the purity of RGB colors to provide true-to-life images regardless of brightness setting. It is most suitable for viewing photos taken with an sRGB compatible and properly calibrated camera, and for viewing

PC graphic and drawing applications such as AutoCAD.

- Cinema mode : Is appropriate for playing colorful movies, video clips from digital cameras or DVs through the PC input for best viewing in a blackened (little light) environment.

**Brightness**

Brighten or darken the image.

**Contrast**

Set the difference between light and dark areas.

**Sharpness**

Sharpen or soften the image.

**Tint**

Shift colors toward red or green.

**Color Temperature**

Adjust the color temperature. At higher temperature the screen looks colder; at lower temperature, the screen looks warmer. If you select “User”, then you can change the intensity of each of 3 color (Red Gain, Green Gain, Blue Gain) to customize user color temperature.

**3D Color Management**

User Color provides six sets (RGBCMY) of colors to be adjusted. When you select each color, you can independently adjust its range, hue, saturation and gain according to your preference.

**SOURCE**

**Quick Auto Source**

Automatically scan through all the input source if the function in the OSD menu is On. The function will stop the signal auto scan process and fix the signal source you preferred if you turn Off the Auto Source.

**SESTEM SETUP:BASIC**

**Presentation Timer**

Remind the presenter to finish the presentation within a certain time frame.

- Timer Period: Set a preferred length of time for presentation.
- Display Timer: Set whether to display the timer on screen.
- Timer Position: Set the position where the timer displays on screen.
- Timer Counting Direction: Set the timer counting direction.

**Language**

Select the language used by the on-screen menu.

**Projector Installation**

Adjust the picture to match the orientation of the projector: upright or upside-down, in front of or behind the screen. Invert or reverse the image accordingly.

**Menu Setting**

Allow you to enter the Menu Setting menu.

- Menu Position: Choose the menu location on the display screen.
- Menu Display Time: Duration of OSD menu display countly starts (at idle state by second).

**Opration Setting**

**Direct Power On**

- On: The projector will turn on in 3 seconds.
- Off: The projector will turn on following normal power on procedure.

**Auto Power Off**

Allows the projector to turn off automatically if no input signal is detected after a set period of time.

**Sleep Timer**

No matter whether the projector detect signal or not, the projector will turn off automatically when the countdown has finished.

**SYSTEM SETUP:Advanced**

**High Altitude**

Use this function to allow the fans operates at full speed continuously to achieve proper high altitude cooling of the projector.

**Lamp Setting**

Allow you to enter the Lamp Setting menu.

**Lamp Mode**

- Normal: 100% lamp brightness.
- Economic: Saves 20% lamp power consumption.
- SmartEco: Saves up to 70% lamp power consumption depending on the content brightness level.
- Lamp Hours: Display the lamp's elapsed operating time (in hours).
- Lamp Hours Reset: Reset the lamp Hour to 0 hours.

**Closed Caption**

Enable or disable closed captions by selecting CC1 (closed caption1, the most common channel), CC2, CC3, CC4, T1, T2 or OFF.

**Reset all settings**

Restore settings to factory default.

**INFORMATION**

Current System Status

- Source
- Picture Mode
- Resolution
- Lamp Mode
- 3D Format
- Color System
- Equivalent Lamp
- FirmwareVersion

# Maintenance

The projector needs proper maintenance. You should keep the lens clean as dust, dirt or spots will project on the screen and diminish image quality. If any other parts need replacing, contact your dealer or qualified service personnel. When cleaning any part of the projector, always switch off and unplug the projector first.

⚠ ***Warning***

- ***Never open any of the covers on the projector. Dangerous electrical voltages inside the projector can cause severe injury. Do not attempt to service this product yourself. Refer all servicing to qualified service personnel.***

## Cleaning the Lens

Gently wipe the lens with lens cleaning paper. Do not touch the lens with your hands.

## Cleaning the Projector Housing

Gently wipe with a soft cloth. If dirt and stains are not easily removed, use a soft cloth damped with water, or water and neutral detergent, and wipe dry with a soft, dry cloth.

☞ ***Note***

- ***Turn off the projector and remove the AC power cord from the power outlet before beginning maintenance work.***
- ***Make sure the lens is cool before cleaning.***
- ***Do not use detergents or chemicals other than those noted above. Do not use benzene or thinners.***
- ***Do not use chemical sprays.***
- ***Use a soft cloth or lens paper only.***

# Replacing the Lamp

As the projector operates over time, the brightness of the projector lamp gradually decreases and the lamp becomes more susceptible to breakage. We recommend replacing the lamp if a warning message is displayed. Do not attempt to replace the lamp yourself. Contact the qualified service personnel for replacement.

☞ ***Note***

- ***The lamp is extremely hot right after turning off the projector. If you touch the lamp, you may scald your finger. When you replace the lamp, wait for at least 45 minutes for the lamp to cool down.***
- ***Do not touch the lamp glass at any time. The lamp may explode due to improper handling, including the touching of the lamp glass.***
- ***Lamp lifetime may differ from lamp to lamp and according to the environment of use. There is no guarantee of the same lifetime for each lamp. Some lamps may fail or terminate their lifetime in a shorter period of time than other similar lamps.***
- ***A lamp may explode as a result of vibration, shock or degradation as a result of hours of use as its lifetime draws to an end. Risk of explosion may differ according to the environment or conditions in which the projector and lamp are being used.***
- ***Wear protective gloves and eyeglasses when fixing or detaching the lamp.***
- ***Faster on-off-cycles will damage the lamp and reduce lamp life. Wait at least for 5 minutes to turn off the projector after powering on.***
- ***Do not operate the lamp in proximity to paper, cloth, or other combustible material nor cover it with such materials.***
- ***Do not operate the lamp in an atmosphere containing an inflammable substance, such as thinner.***
- ***Thoroughly ventilate the area or the room when operating the lamp in an oxygen atmosphere (in the air). If ozone is inhaled, it could cause headaches, nausea, dizziness, and other symptoms.***
- ***The inorganic mercury is involved in the lamp. If the lamp bursts, the mercury inside the lamp will be exposed. Leave the area immediately if the lamp shatters while being operated and ventilate the area for at least 30 minutes in order to avoid the inhalation of mercury fumes. Otherwise it could be harmful to user's health.***

1. Turn off the projector.
2. If the projector is installed in a ceiling mount, remove it
3. Unplug the power cord.
4. Loosen the screw in the side of the lamp cover and remove the cover.
5. Remove the screws from the lamp module, raise the handle, and lift out the module.
6. Insert the new lamp module into the projector and tighten the screws.
7. Replace the lamp cover and tighten the screw.
8. Turn on the projector.  If the lamp does not turn on after the warm-up period, try reinstalling the lamp.
9. Reset the lamp hour. Refer to the "**Setting > Lamp Time Reset**" menu.

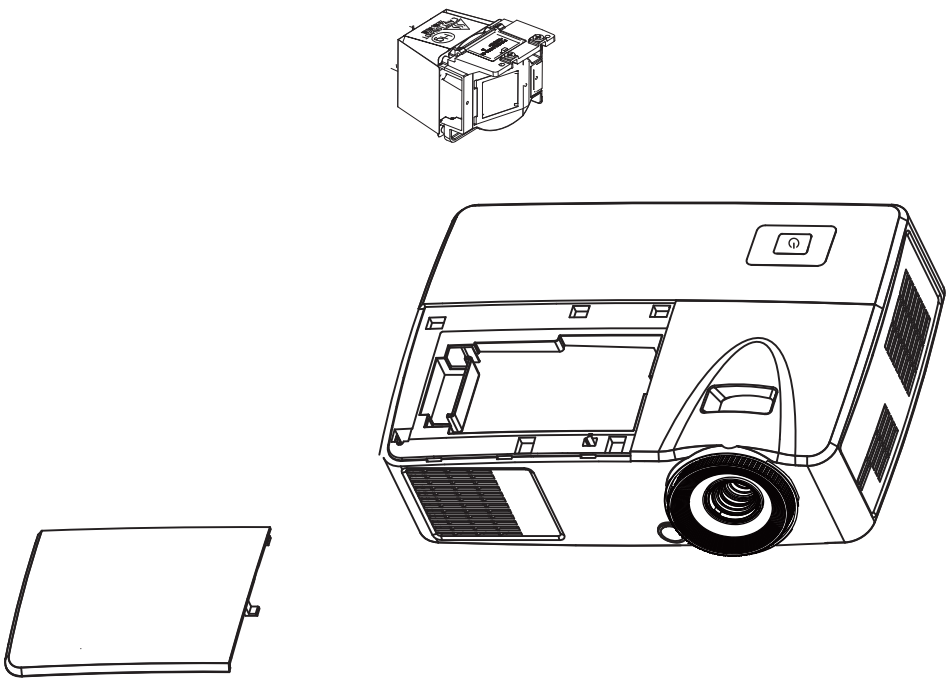

☞ ***Note***

- ***Dispose the used lamp according to local regulations.***
- ***Ensure that screws are tightened properly. Screws not tightened fully may result in injury or accidents.***
- ***Since the lamp is made of glass, do not drop the unit and do not scratch the glass.***
- ***Do not reuse the old lamp. This could cause the lamp to explode.***
- ***Be sure to turn off the projector and unplug the AC power cord before replacing the lamp.***
- ***Do not use the projector with the lamp cover removed.***

# Specifications

| | | |
|---|---|---|
| Display system | Single 0.55" DLP panel | |
| Resolution | XGA<br>(1024 x 768 pixels) | |
| Zoom | 1.1X | |
| F/No. | 2.5 - 2.7 | |
| Focal length | 22.08 - 24.28mm | |
| Screen size | 30" - 300" | |
| Lamp | 190W | |
| Input terminal | D-Sub 15-pin x 1,<br>Video x 1, | |
| Output terminal | NA | |
| Control terminal | RS-232 x 1, USB B type x1 (supports firmware upgrade) | |
| Speaker | NA | |
| Video compatibility | NTSC, NTSC 4.43<br>PAL, PAL-N, PAL M<br>SECAM, Composite video | |
| Scanning frequency<br>Horizontal frequency<br>Vertical frequency | <br>31 - 100 KHz<br>50 - 120 Hz | |
| Environment | Operating:<br>Temperature: 0°C to 40°C<br>Humidity: 10%-80%<br>Storage:<br>Temperature: -20°C to 60°C<br>Humidity: 30%-85% | |
| Power requirement | AC 100-240 V, 50 - 60 Hz, 2.6A | |
| Power consumption | 265W (Max.) | |
| Dimension<br>(W x D x H) | 285 x 208 x 116mm (Projector)<br>390 x 270 x 163mm(Outer carton) | |
| Weight | 1.95kg (Projector)<br>2.8kg (With projector and outer carton) | |
| Note: Design and Specifications are subject to change without prior notice. | | |

# Dimensions

285 mm (W) x 208 mm (D) x 116 mm (H)

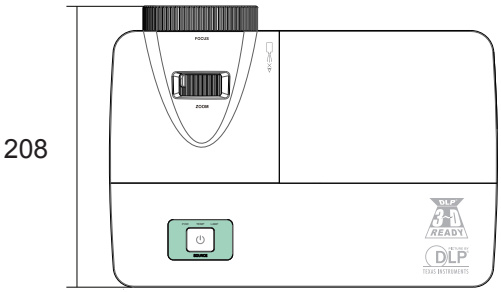


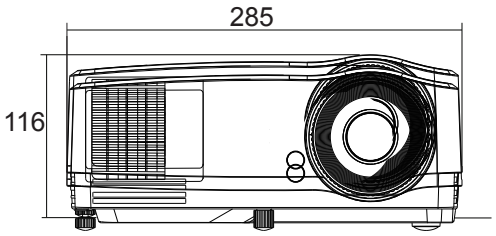


Ceiling mount installation

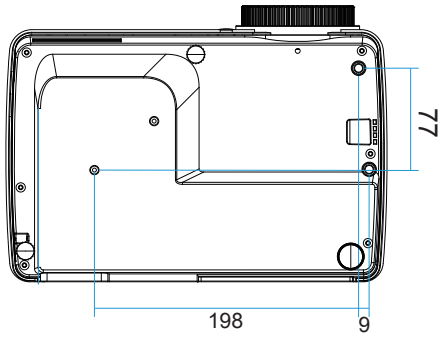


Ceiling mount screws:
M4 x 8 （Max. L = 8mm）

Unit: mm

# Appendix

## LED Indicator Messages

| 电源 LED | 温度 LED (Red) | 灯泡 LED (Red) | Description |
|---|---|---|---|
| Power Events | | | |
| Solid Orange | Off | Off | Stand-by |
| 1Hz Green Blinking | Off | Off | Powering up |
| Solid Green | Off | Off | Normal operation |
| 1Hz Orange Blinking | Off | Off | Normal power-down cooling |
| Lamp Error Message | | | |
| Off | Off | Solid | First Lamp-lit error cooling |
| Off | Off | Blinking 1 Hz | Lamp error in normal operation |
| Thermal Error Message | | | |
| Off | Blinking 1 time | Off | Fan 1 error |
| Off | Blinking 2 times | Off | Fan 2 error |
| Off | Blinking 3 times | Off | Fan 3 error |
| Off | Solid | Off | Over temperature |
| 5Hz Orange Blinking | Off | Off | Thermal break error |
| Off | Blinking 5 Hz | Off | Thermal sensor fail |
| System Error Message | | | |
| Off | Blinking 1 Hz | | DMD error |
| Off | Solid | | Color wheel error |

# Compatibility Modes

## Computer:

| Resolution | H-Sync [KHz] | V-Sync [Hz] |
|---|---|---|
| 640 x 350 | 37.9 | 85.0 |
| 640 x 480 | 24.6 | 50.0 |
| | 31.5 | 59.9 |
| | 37.9 | 72.8 |
| | 37.5 | 75.0 |
| | 43.3 | 85.0 |
| | 61.9 | 120 |
| 720 x 400 | 31.5 | 70.0 |
| | 37.9 | 85.0 |
| 800 x 600 | 31.0 | 50.0 |
| | 35.2 | 56.0 |
| | 37.9 | 60.3 |
| | 48.1 | 72.0 |
| | 46.9 | 75.0 |
| | 53.7 | 85.1 |
| | 76.3 | 120.0 |
| 1024 x 768 | 48.4 | 60.0 |
| | 56.5 | 70.1 |
| | 60.0 | 75.0 |
| | 68.7 | 85.0 |
| 1152 x 864 | 67.5 | 75.0 |
| 1280 x 768 | 47.8 | 60.0 |
| 1280 x 800 | 49.7 | 60.0 |
| 1280 x 960 | 60.0 | 60.0 |
| | 85.9 | 85.0 |
| 1280 x 1024 | 64.0 | 60.0 |
| 1400 x 1050 | 65.3 | 60.0 |
| 1600 x 1200 | 75.0 | 60.0 |

## Video:

| Compatibility | Resolution | H-Sync [KHz] | V-Sync [Hz] |
|---|---|---|---|
| 480i | 720 x 480 | 15.8 | 60 |
| 480p | 720 x 480 | 31.5 | 60 |
| 576i | 720 x 576 | 15.6 | 50 |
| 576p | 720 x 576 | 31.3 | 50 |
| 720p | 1280 x 720 | 37.5 | 50 |
| 720p | 1280 x 720 | 45 | 60 |
| 1080i | 1920 x 1080 | 33.8 | 60 |
| 1080i | 1920 x 1080 | 28.1 | 50 |
| 1080p | 1920 x 1080 | 67.5 | 60 |
| 1080p | 1920 x 1080 | 56.3 | 50 |

# Troubleshooting

Refer to the symptoms and measures listed below before sending the projector for repairs. If the problem persists, contact your local reseller or service center. Please refer to "LED Indicator Messages" as well.

## Start-up problems

no lights turn on:

- Be sure that the power cord is securely connected to the projector and the other end is plugged into an outlet with power.
- Press the power button again.
- Unplug the power cord and wait for a short while, then plug it in and press the power button again.

## Image problems

If the searching source is displayed:

- Press **Source** to select an active input source.
- Be sure the external source is turned on and connected.
- For a computer connection, ensure your notebook computer's external video port is turned on. Refer to the computer manual.

If the image is out of focus:

- While displaying the on-screen menu, adjust the focus ring. (The image size should not change; if it does, you are adjusting the zoom, not the focus.)
- Check the projection lens to see if it needs cleaning.

If the image is flickering or unstable for a computer connection:

- Press **Menu** , go to ***Computer Image*** and adjust ***Frequency*** or ***Tracking*****.**

### Remote control problems

If the remote control does not operate:

- Be sure nothing is blocking the remote control receiver on the front of the projector. Use the remote control within the effective range.
- Aim the remote control at the screen or at the front of the projector.
- Move the remote control so it is more directly in front of the projector and not as far to the side.

# RS-232 Command and Configuration

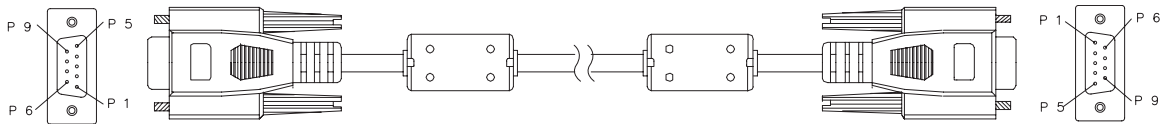


**D-Sub 9 pin**

| | |
|---|---|
| 1 | 1 CD |
| 2 | RXD |
| 3 | TXD |
| 4 | DTR |
| 5 | GND |
| 6 | DSR |
| 7 | RTS |
| 8 | CTS |
| 9 | RI |

**Wire List**

| C1 | COLOR | C2 |
|---|---|---|
| 1 | Black | 1 |
| 2 | Brown | 3 |
| 3 | Red | 2 |
| 4 | Orange | 6 |
| 5 | Yellow | 5 |
| 6 | Green | 4 |
| 7 | Blue | 8 |
| 8 | Purple | 7 |
| 9 | White | 9 |
| SHELL | DW | SHELL |

| | |
|---|---|
| Baud Rate | 2400/4800/9600/14400/19200/38400/57600/115200 bps |
| Data Length | 8 bit |
| Parity Check | None |
| Stop Bit | 1 bit |
| Flow Control | None |

# IR Control Table

Customer code: 0X2626
Format : NEC






| Key | Format | Byte1 | Byte2 | Byte3 | Byte4 |
|---|---|---|---|---|---|
| Power | NEC | 83 | F4 | 17 | E8 |
| Auto Sync | NEC | 83 | F4 | 08 | f7 |
| VGA1 | NEC | 83 | F4 | 41 | be |
| VGA2 | NEC | 83 | F4 | 45 | ba |
| Video | NEC | 83 | F4 | 52 | ad |
| Source | NEC | 83 | F4 | 40 | bf |
| Color Mode | NEC | 83 | F4 | 10 | ef |
| Enter | NEC | 83 | F4 | 15 | ea |
| Up / Keystne+ | NEC | 83 | F4 | 0b | f4 |
| Down / Keystone- | NEC | 83 | F4 | 0c | f3 |
| Left | NEC | 83 | F4 | 0e | f1 |
| Right | NEC | 83 | F4 | 0f | f0 |
| Menu | NEC | 83 | F4 | 30 | CF |
| My Button(Function) | NEC | 83 | F4 | 56 | A9 |
| Exit | NEC | 83 | F4 | 28 | D7 |
| Mouse | NEC | 83 | F4 | 31 | CE |
| Mouse left | NEC | 83 | F4 | 36 | C9 |
| Mouse right | NEC | 83 | F4 | 37 | C8 |
| Mouse Page Up | NEC | 83 | F4 | 06 | F9 |
| Mouse Page Down | NEC | 83 | F4 | 05 | FA |
| Lock(Key pad) | NEC | 83 | F4 | 8E | 71 |
| Pattern | NEC | 83 | F4 | 55 | AA |
| Eco | NEC | 83 | F4 | 2B | D4 |
| Magnify + | NEC | 83 | F4 | 18 | e7 |
| Freeze | NEC | 83 | F4 | 03 | fc |
| Blank | NEC | 83 | F4 | 07 | f8 |
| Timer (Presentation) | NEC | 83 | F4 | 27 | d8 |
| Volume+ | NEC | 83 | F4 | 82 | 7D |
| Volume- | NEC | 83 | F4 | 83 | 7C |
| Mute | NEC | 83 | F4 | 14 | eb |
| Aspect | NEC | 83 | F4 | 13 | EC |

PYLE®

PyleUSA.com