SUMMARY

1 - ITEMS DELIVERED-TECHNICAL DATA 1
2 - ASSEMBLY 2
3 - CLEANING AND MAINTENANCE 4
4 - DISPOSAL 5
5 - GUARANTEE 5

1- ITEMS DELIVERED - TECHNICAL DATA

DIY

ASSEMBLY EASY

2 - ASSEMBLY

(A)X1	(B)X1
(C)X1	(D)X1
(E)X 5	M6*20MM (F)X 4
(G)X1	(H)X1

Please take off the plastic cap of gas cylinder before assembly!

1

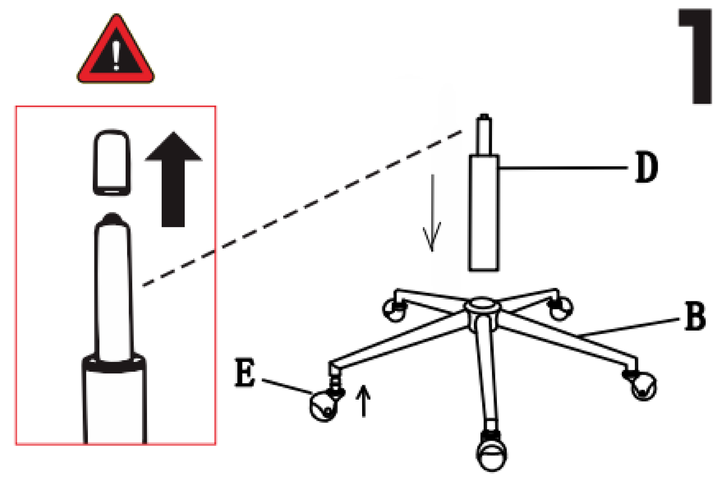

(A)X1

(C)X1

M6*20MM
(F)X 4

(G)X1

2

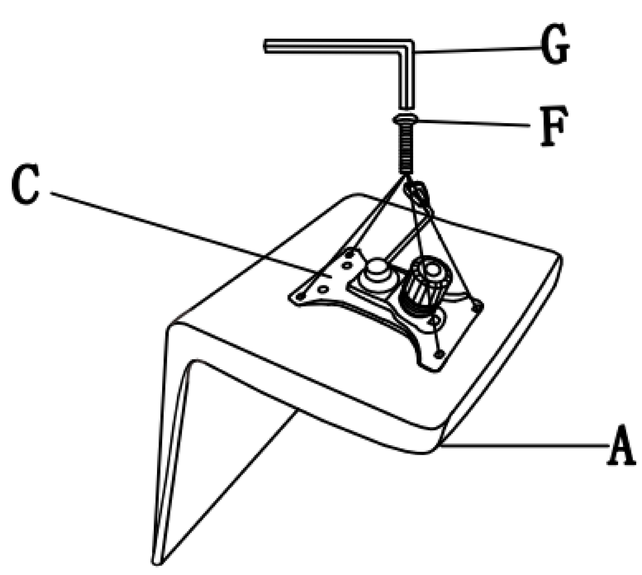

3

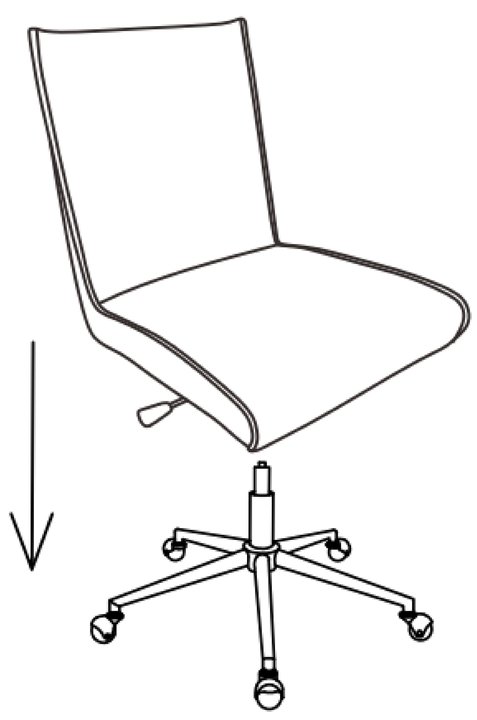

4

3 - CLEANING AND MAINTENANCE

- Do not use corrosive or abrasive for cleaning products.
- Clean with a soft cloth.
- Don't interfere with metal objects in a mechanism, so that they are threatened with serious deterioration.