Assembly Instructions

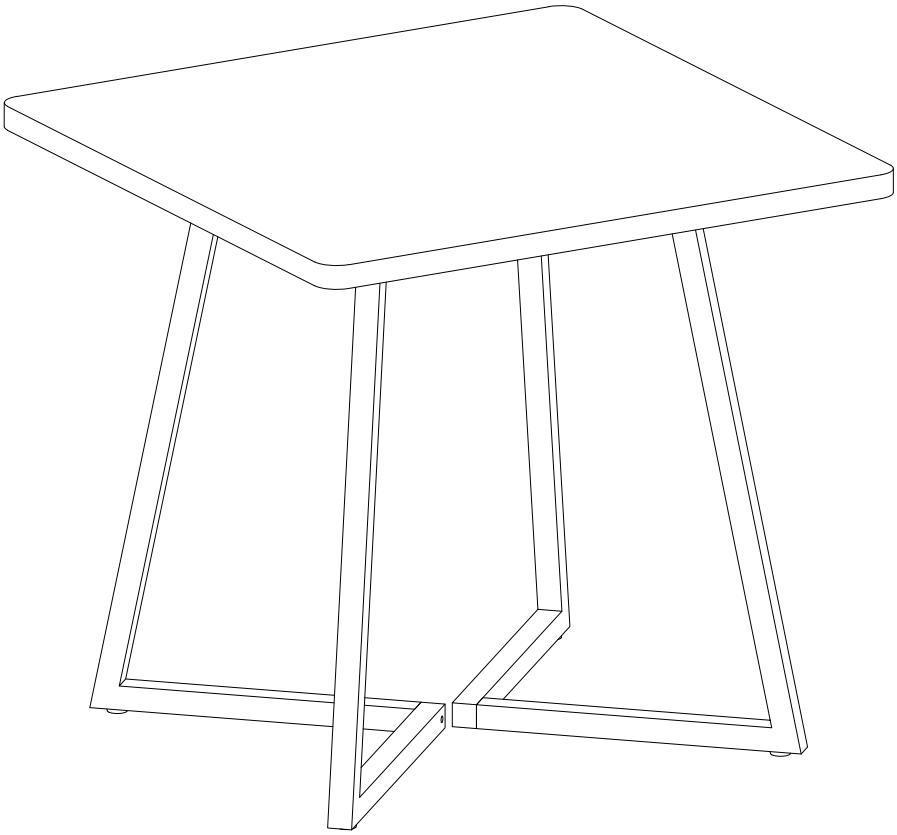

Dining Table	Model No. **HOGA-J0280 /HOGA-J0367** **HOGA-J0403**

Contact Us

We're here to help you.

Your satisfaction is our top priority. If you encounter any issues with this product, such as missing or damaged parts, we're here to help. Please retain the original packaging and take photos of the packaging and the product, then contact us as soon as possible.

Warm Tips

1. Carefully read these instructions and keep them for future reference.
2. Check the parts list and confirm everything's there before starting assembly.
3. When assembling, put all parts on a soft, smooth surface like a carpet to avoid scratches.
4. Don't fully tighten screws until all parts are confirmed in place to avoid misalignment.

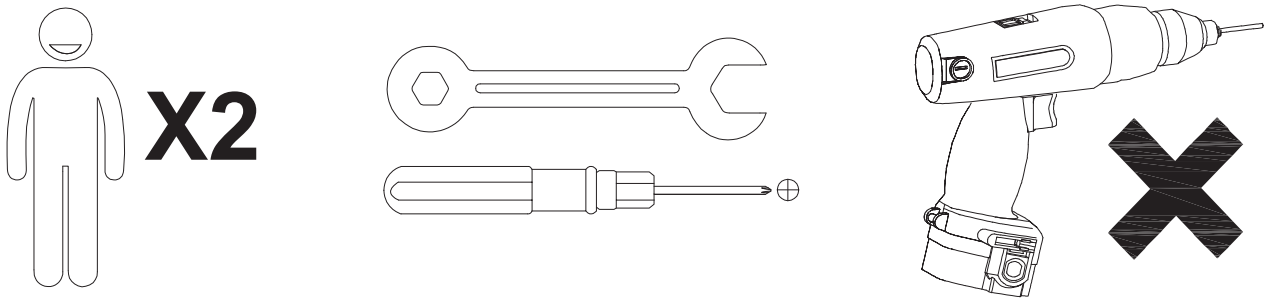

We recommend using hand tools for assembly.

If an electric screwdriver is used, reduce power and torque to avoid damage to the product.

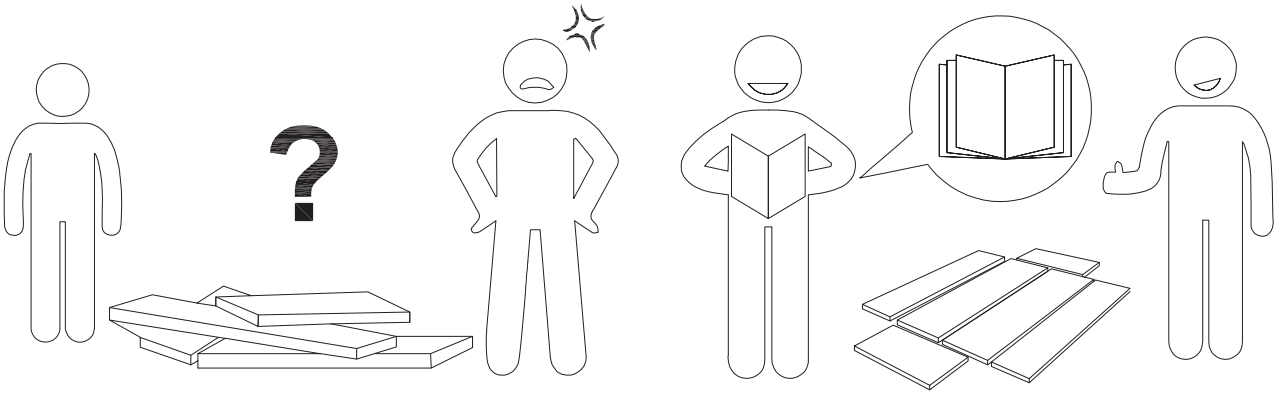

AVOID SCRATCHES

In order to avoid scratching, this furniture should be assembled on a soft surface, such as a rug.

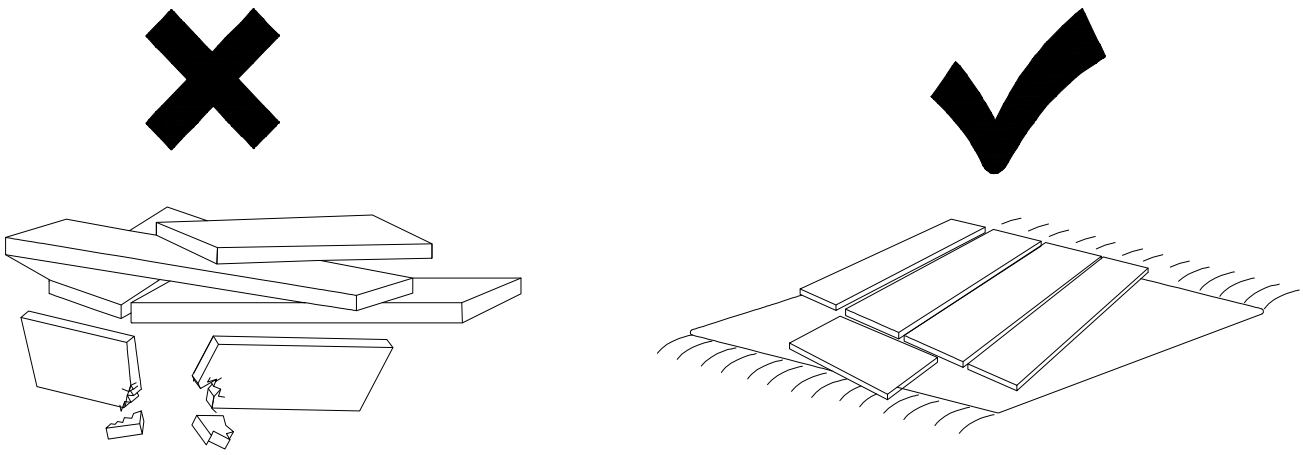

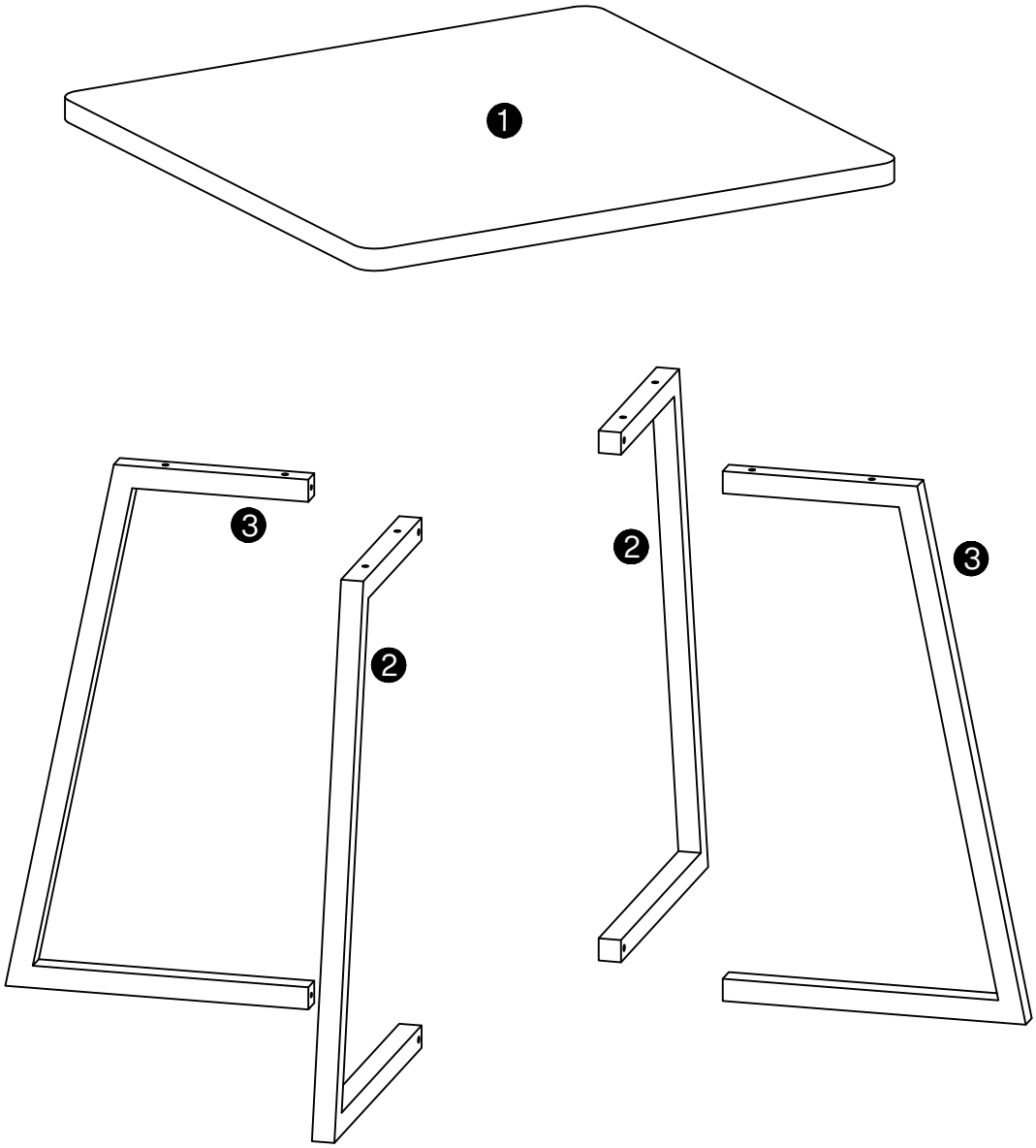

⚠ Caution

Make sure all parts are included. Most board parts are labeled or stamped on the raw edge.
Contact us for a free replacement if you encounter any damaged or missing parts.

Parts List

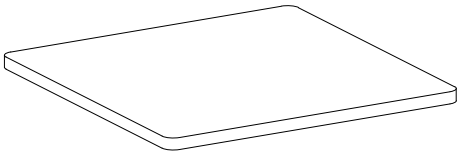

❶ 1 pc

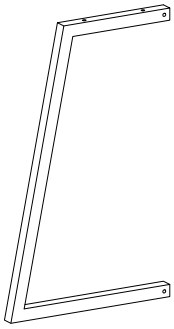

❷ 2 pcs

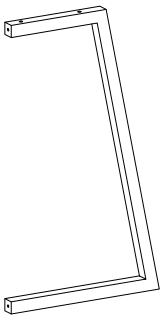

❸ 2 pcs

Hardware List

A	X8+1	B	X4+1	C	X1	D	X6
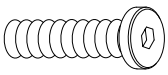		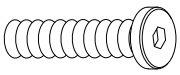					
M6X45 mm		M6X50 mm		M4X55 mm		M6XØ25 mm	

1

screw down 100%

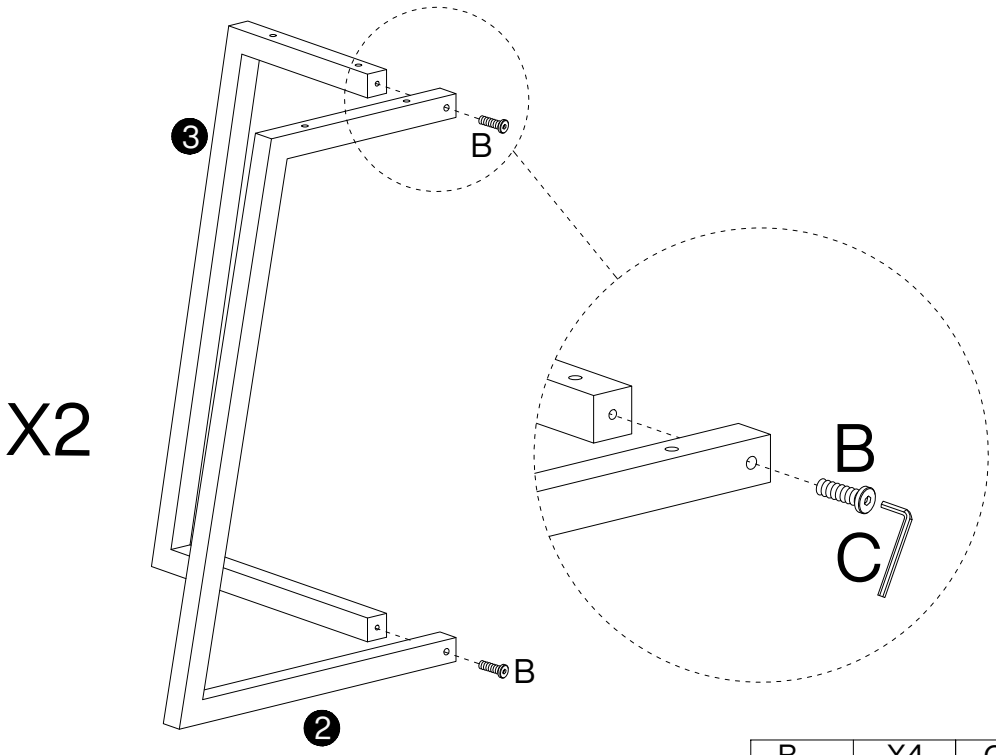

B	X4	C	X1
M6X50 mm		M4X55 mm	

2

screw down 100%

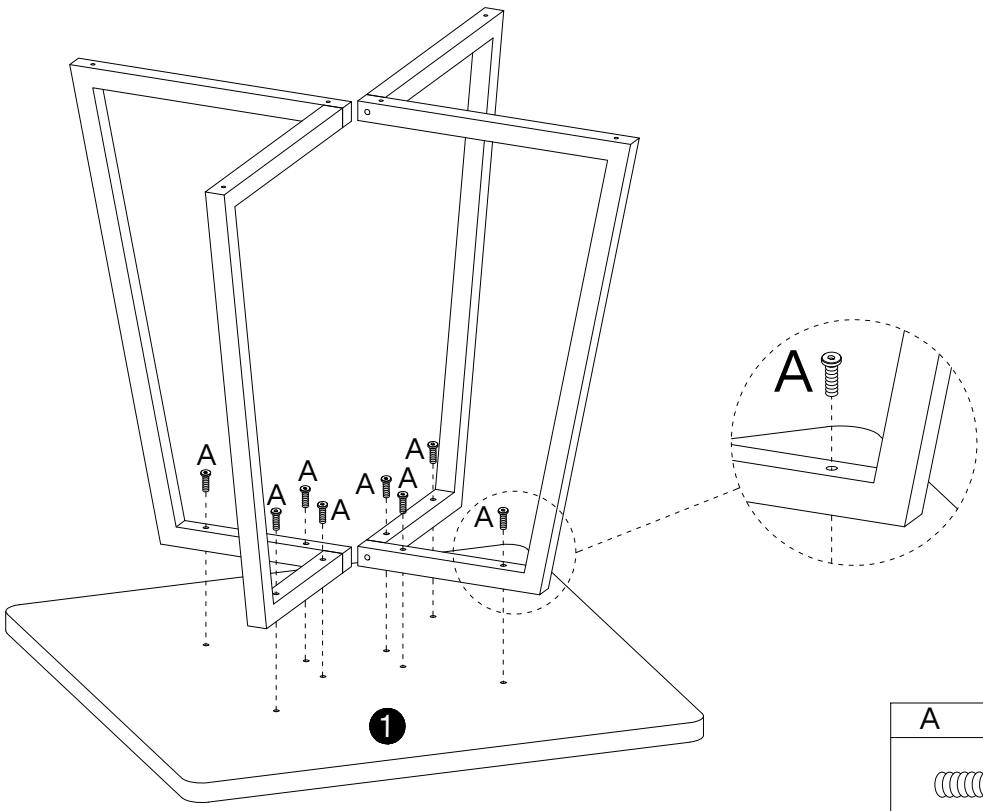

A	X8
M6X45 mm	

3

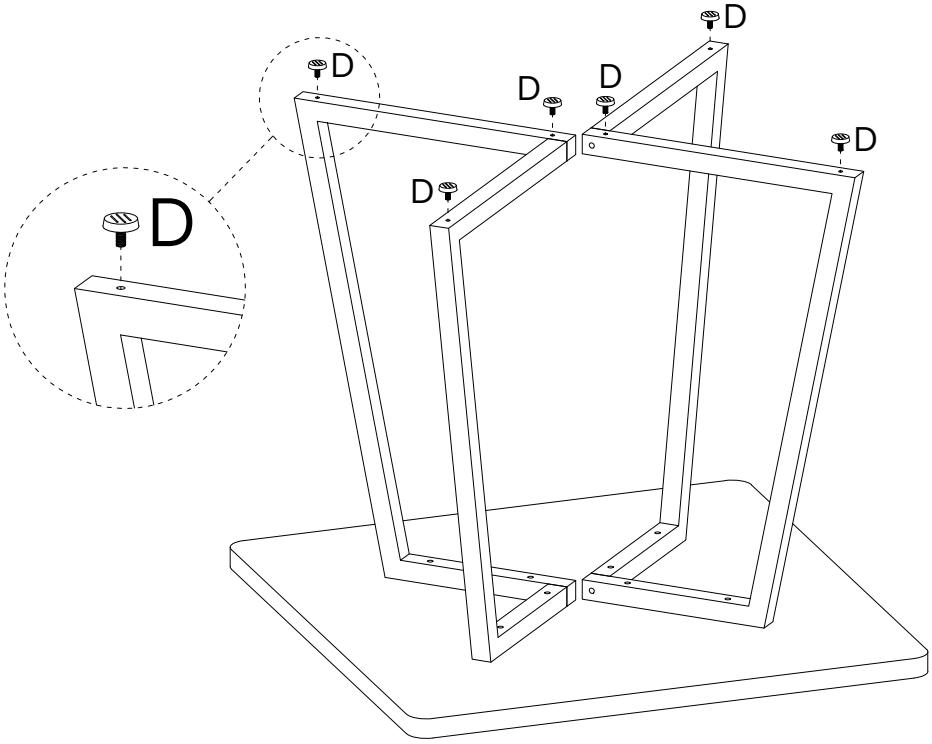

D	X6
M6XØ25 mm	

4

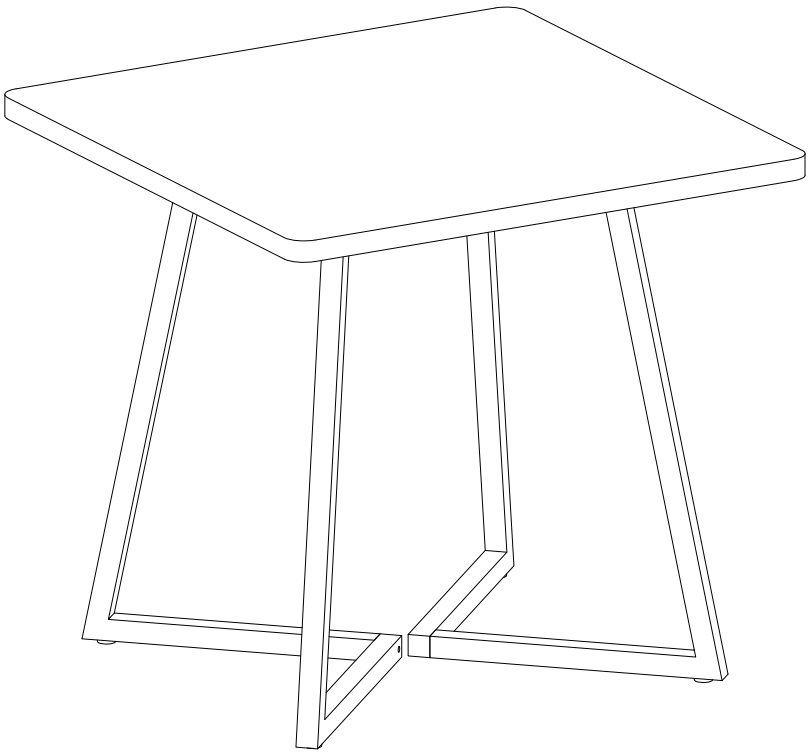
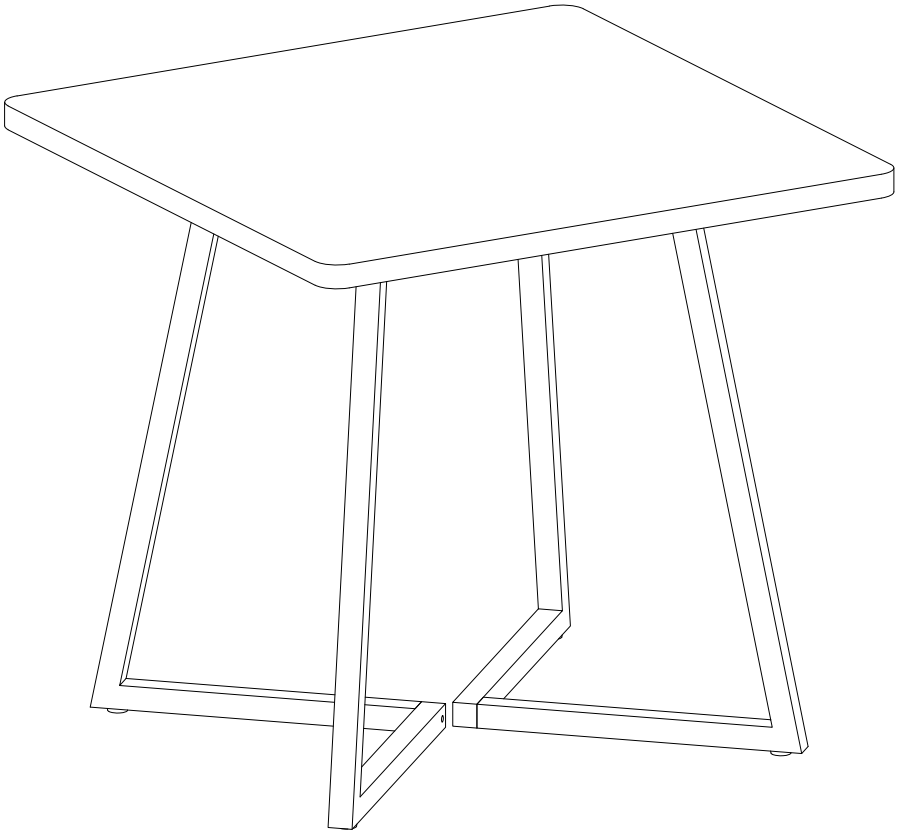
Thank you for your support!