Assembly Instruction

NOTICE:Before assembly, move all parts and place them on a soft surface.

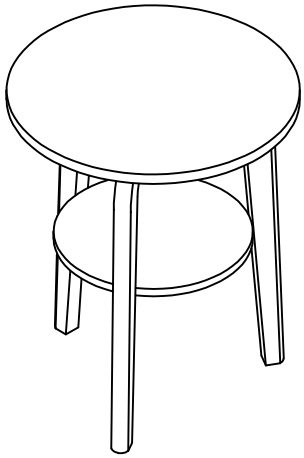

Note: If you find any missing or damaged accessories in your package, please contact us promptly and we will send you the corresponding accessories for free.

Hardware & Component

NO.	NAME	PICTURE	QTY
A	Bracket		3
B	Screw1		12
C	Screw2		3
D	Felt pad		3
	Screwdriver		1

Step1

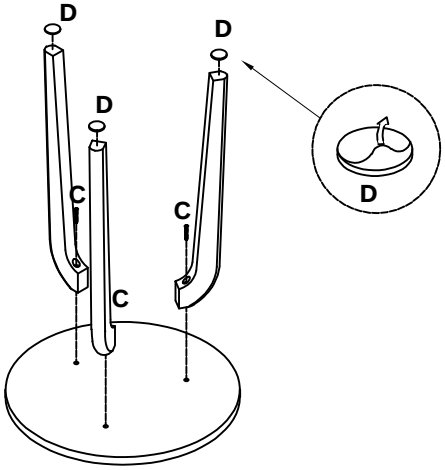

Secure the legs to the panel with screws2, then attach the felt pads to the legs.

Step2

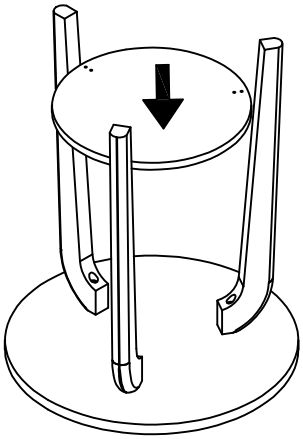

Place the baseboard between the three table legs.

Step3

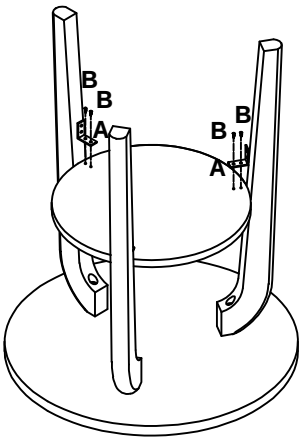

Fix the corner bracket to the base plate with screw 1.

Step4

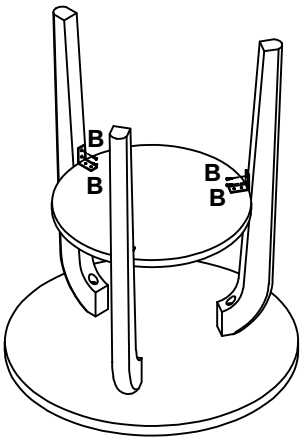

Fix the bracket to the table leg with screw 1.