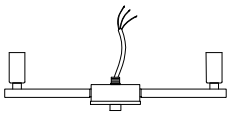

① light fixture 1pcs

③ screw 1pcs

⑨ chain 1pcs

② hang tube 1pcs

⑩ hanging ring 1pcs

⑥ screw

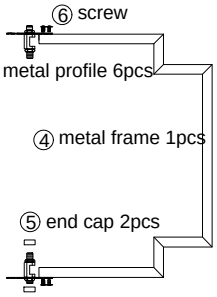

metal profile 6pcs

④ metal frame 1pcs

⑤ end cap 2pcs

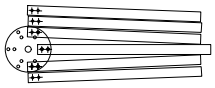

⑦ cover plate 2pcs

⑪ canopy 1pcs

⑫ cap nut 2pcs

⑧ cover box 2pcs

X 1PCS

screw driver

X 3PCS

X 3PCS

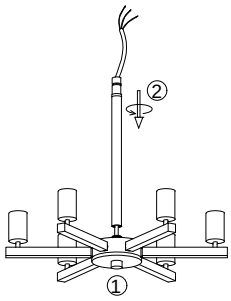

1.Let the wire of the fixture ① go through the hanging tube ②, rotate to install th tube ② to the fixture.

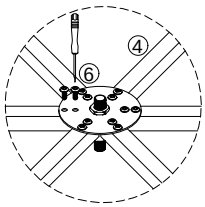

Loosen to remove out the screws ⑥ before start step ②

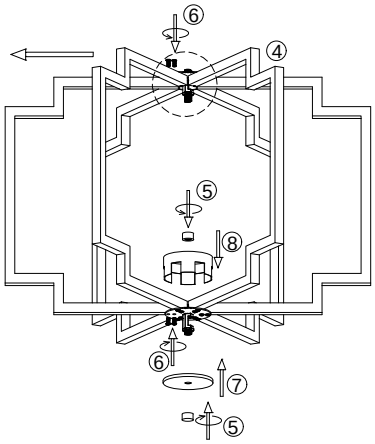

2.Adjust the profile ⑥ of metal frame ④ to the suitable position like picture shown , put the screw ⑥ into the holes of round plate where up and down of frame ④,don't tighten the screw ⑥ until all screws are ready in the holes, rotate to fasten the screws at last.

3.Loosen to remove out end cap ⑤, install the plate ⑦ and box ⑧ to the frame ④ with end cap ⑤.

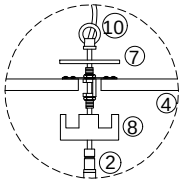

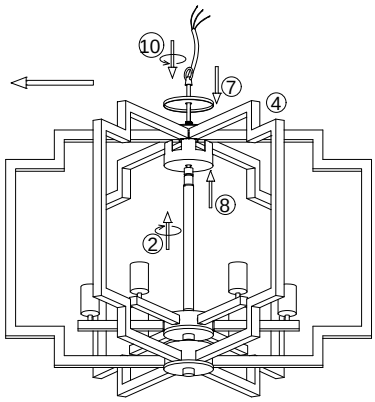

4.Let the wire go through the box ⑧,metal farme ④ and plate⑦ ,hanging ring ⑩ (box ⑧ should go into the metal profile),rotate ring ⑩ to install all parts to the fixture .

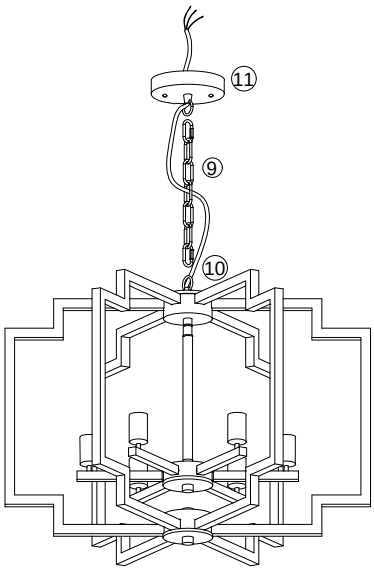

5、Hanging the fixture to the canopy ⑪ with chain ⑨ ,let the wire go through the chain ⑨ and canopy ⑪.

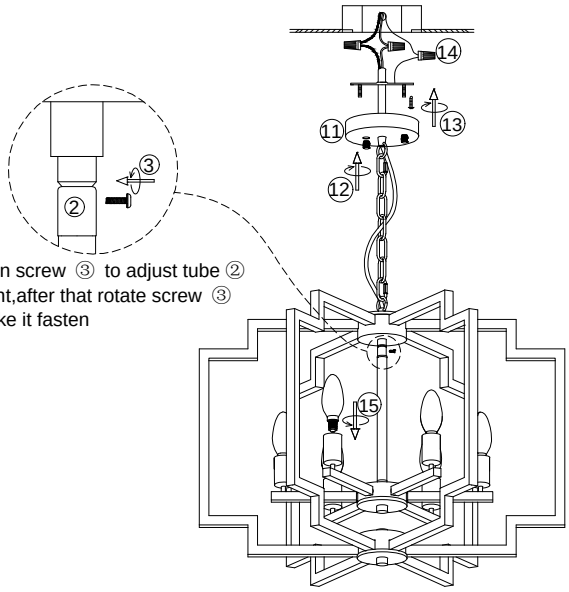

Loosen screw ③ to adjust tube ② straight,after that rotate screw ③ to make it fasten

6. Install the bracket to the ceiling junction box with screw ⑬.
7.Connect the wire to your home line with cap connector ⑭.
8.Install the fixture to the bracket with cap nut ⑫.
9. Install the bulb ⑮.

Please read carefully before installation!!!
Note : Please make sure that the electricity is powered off during installation !
Only a professional electrician should install this kind of product !