Coffee Table Assembly Guide

Pre-assembly prep:
Place the product on a clean, smooth surface (like the outer packaging box or a carpet) to prevent damage.

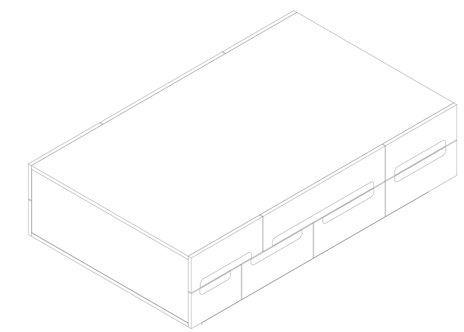

1

Tabletop =1

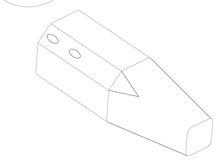

2

Table leg =4

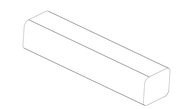

3

Middle leg=1

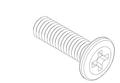

A

Flat head screw
M6 x 30 = 8

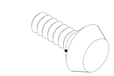

B

Leveler = 1
It has been installed in ③

C

Full thread screw
M8 x 30 = 1

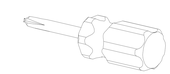

D

Screwdriver = 1

Step 1

Connect ② (table legs * 4) with A (screw * 8)

Connect ③ (middle leg *1) with C (screw * 1)

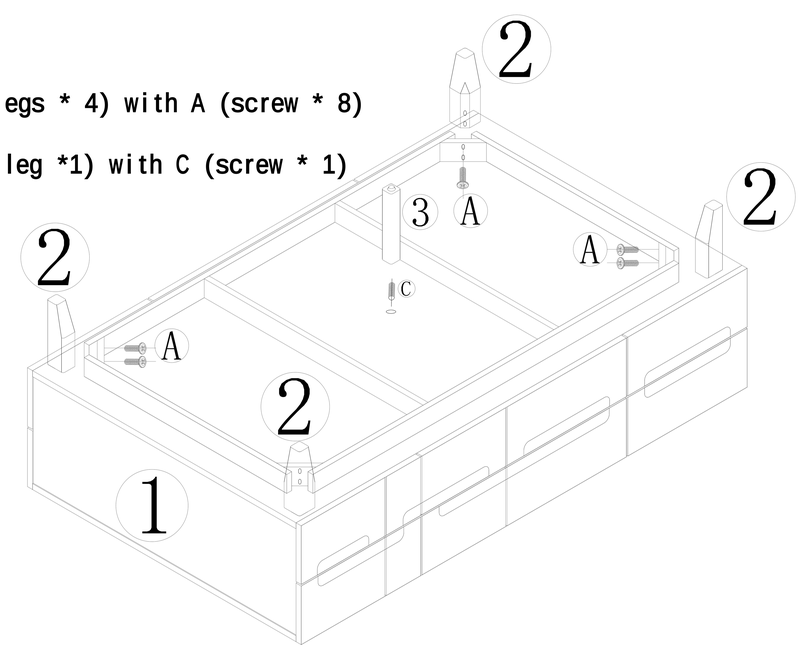

Step 2
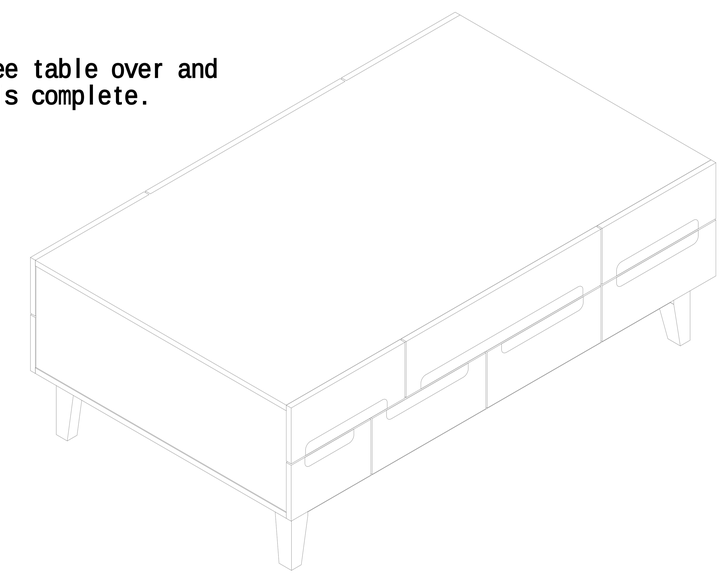
Flip the coffee table over and the assembly is complete.