INSTRUCTION MANUAL

Dining Chair

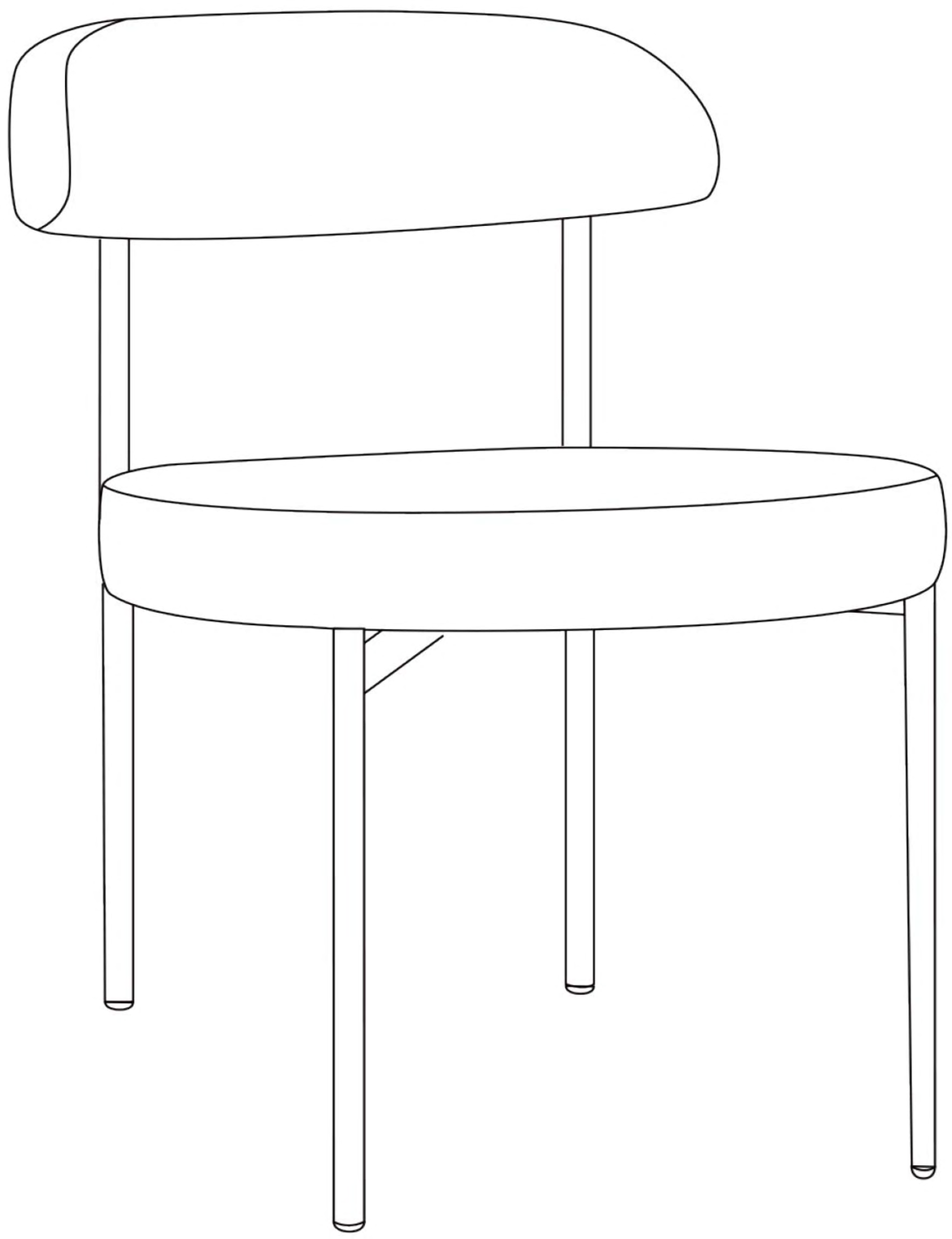

1	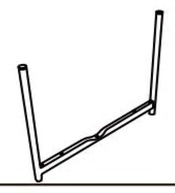	1
2	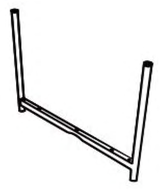	1
3		2
4	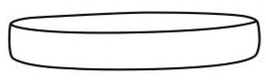	1
5		1

A	M6x30mm	1
B	M6x14x1.5mm	5
C	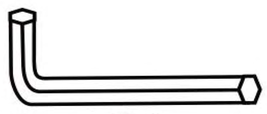 #4	1
D	M6x13mm	4
E	M6x50mm	4
F	#5	1
G	M8	4
H	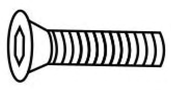 M6x30mm	4

1

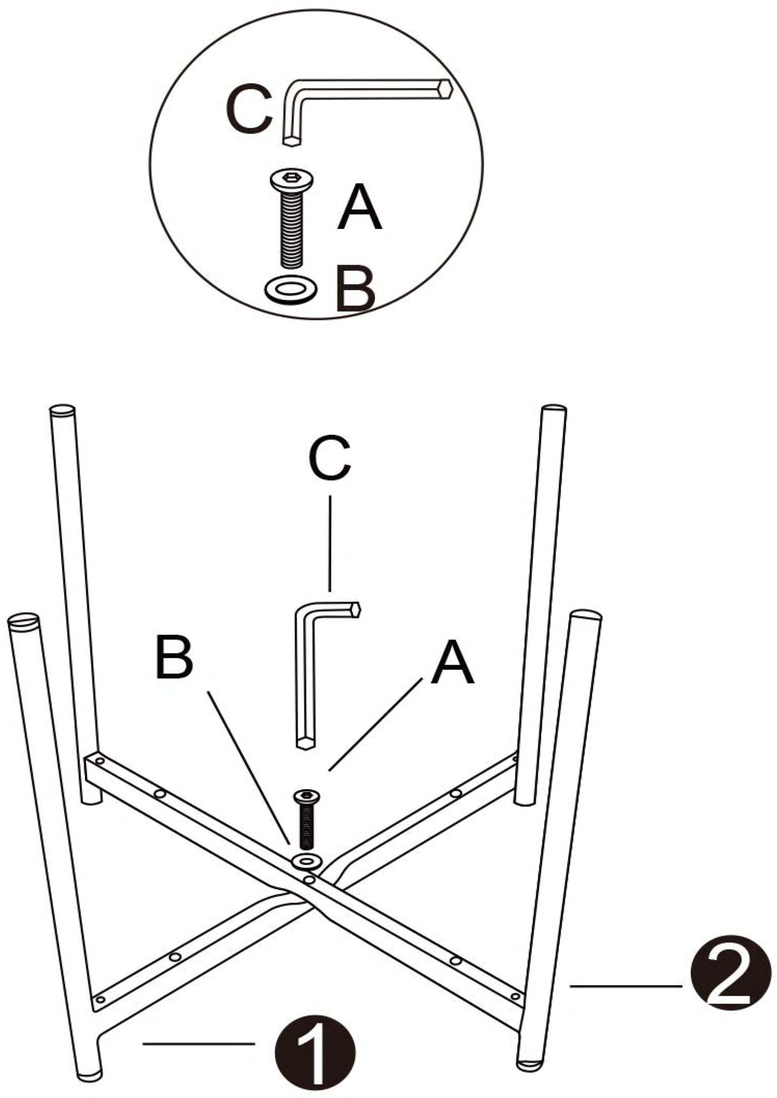

2

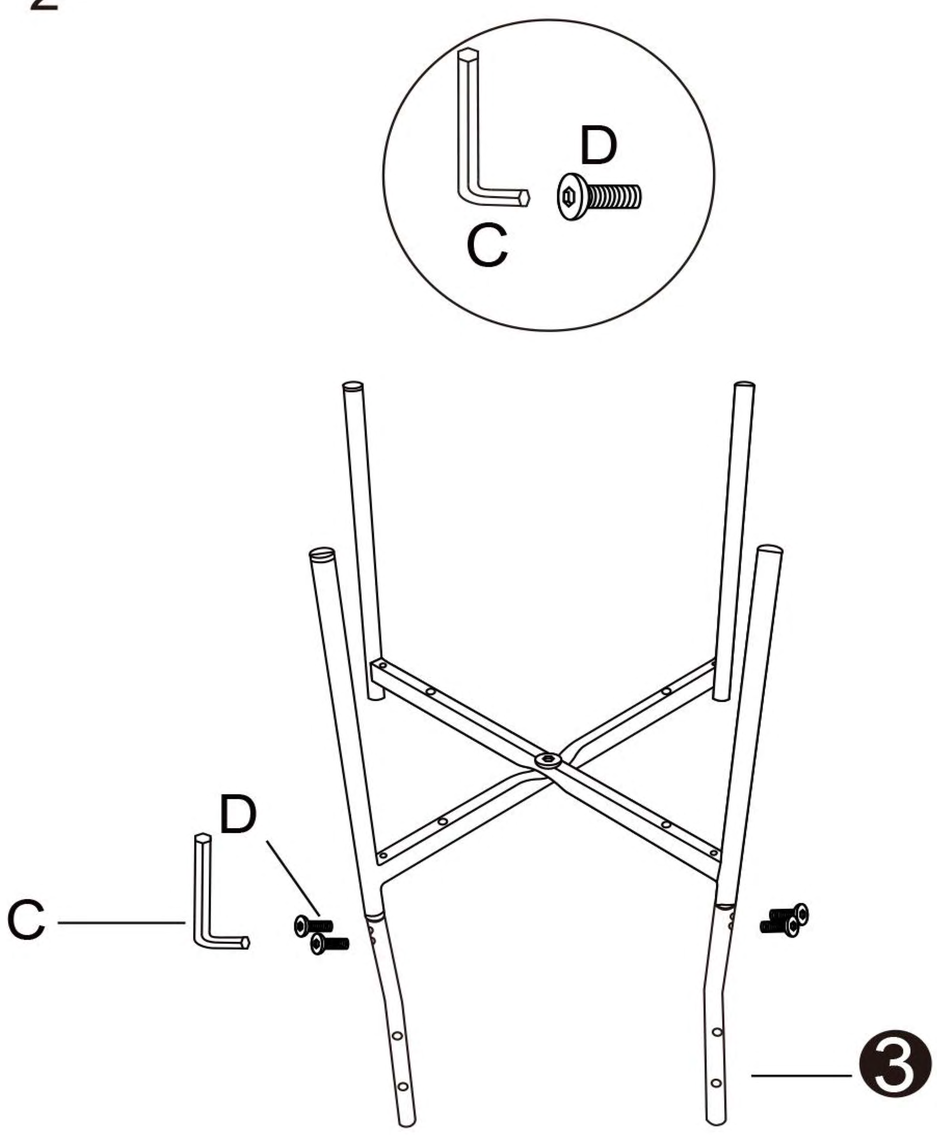

3

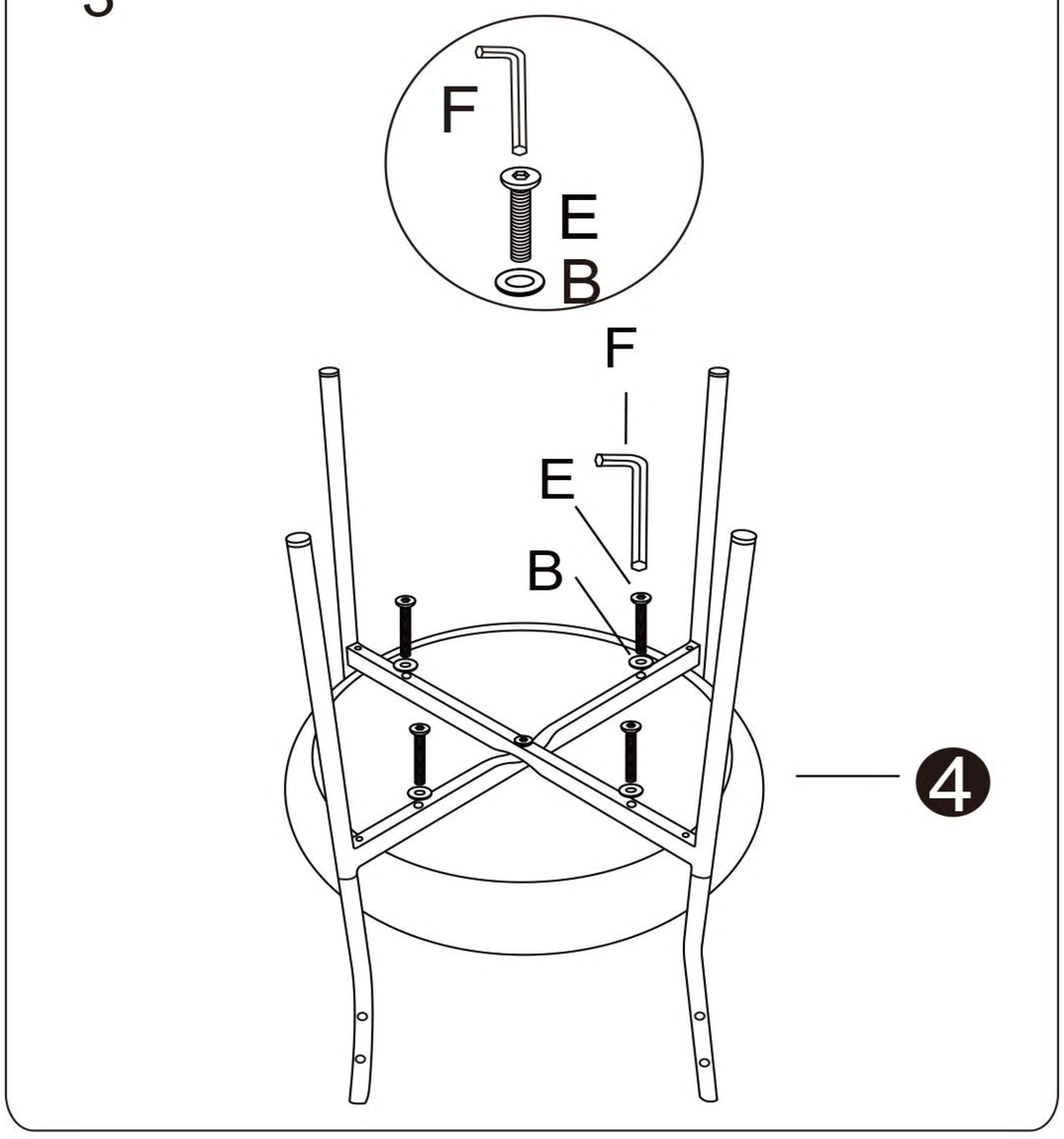

4

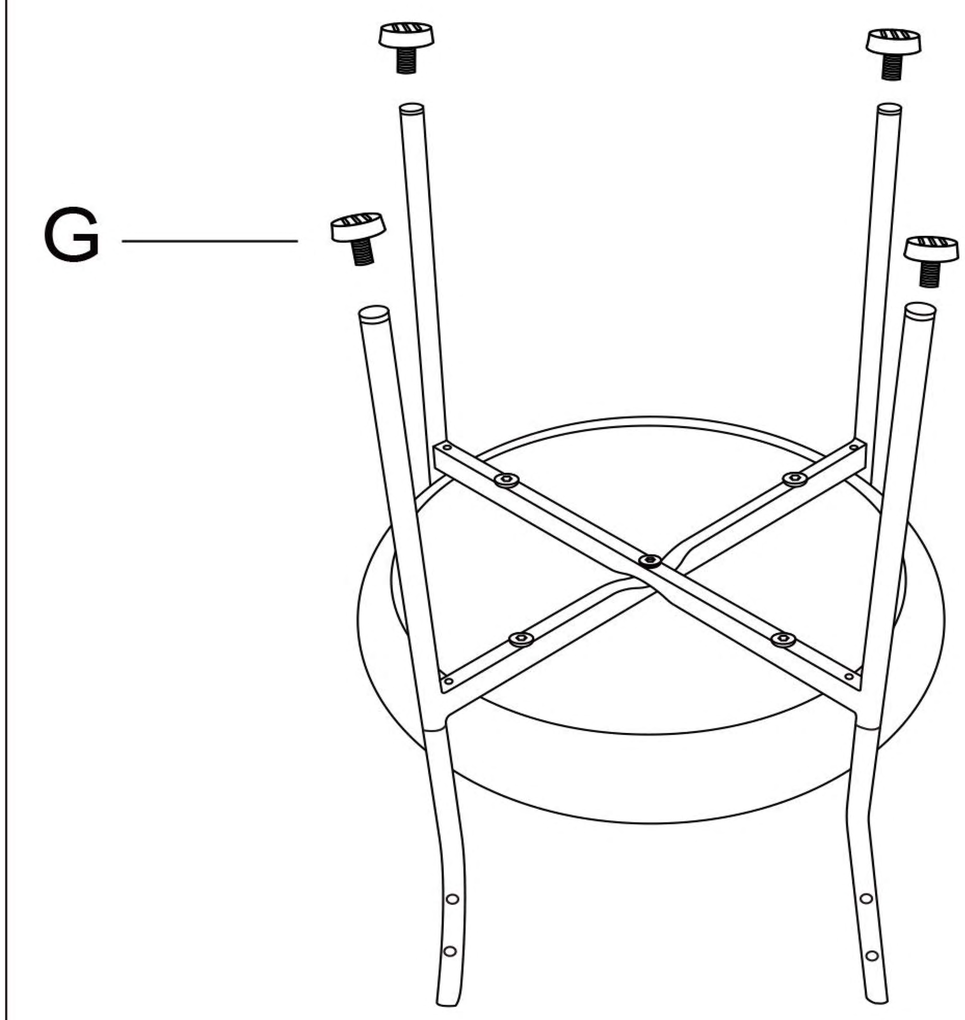

5

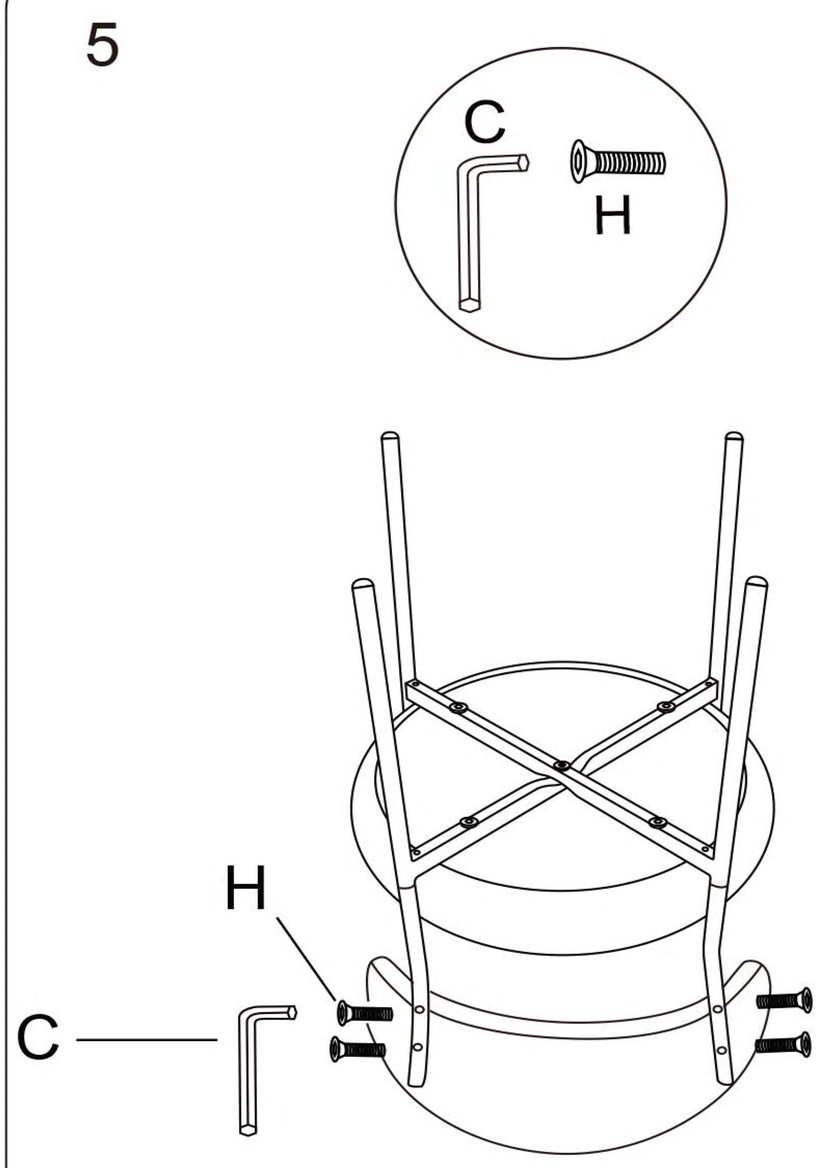

6

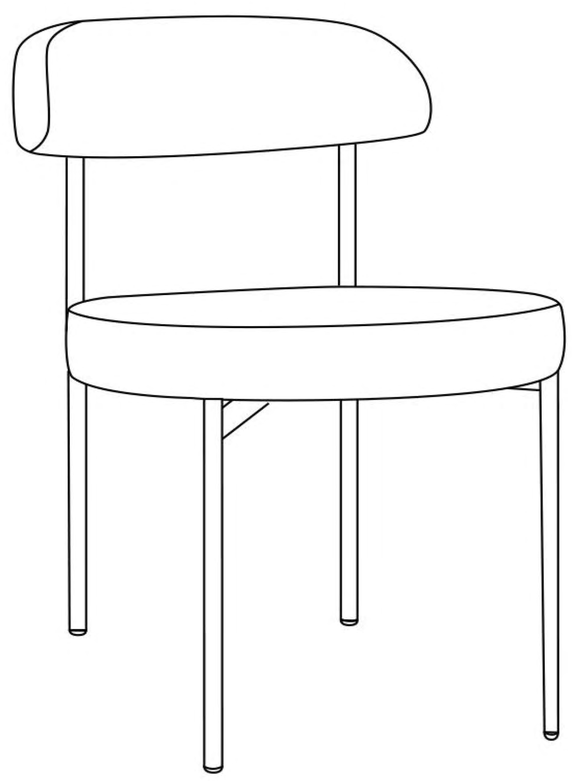

Thank you for purchasing this quality product.Be sure to check all packing material carefully for small part that may have come loose inside the carton during shipment.