CORONA CHAIR



- Please check that all parts and fittings are correct before assembling the item.
- Replacement parts can be supplied for any damages to the item.
- Please keep all packaging until the iem is assembled as we will require informatio from this if replacement parts are required.
- If you have any questions please call 01709 836856 or email admin@mercersfurniture.co.uk

		1 CHAIR	2 CHAIRS
A	Ø 7 x 100 Allen	02	04
B	Ø 7 x 60 Allen	08	16
C	8,0 x 30	06	12
D	4,0 x 30 Phillips Cab. Flangeado	04	08
E	Pegamento 10g	02	
F	4mm	01	
G	Ø 7 x 70 Allen	04	08
H	1/4"	04	08
I	Ø 1/4 x 90 Allen	04	08
J		04	08
K		06	12

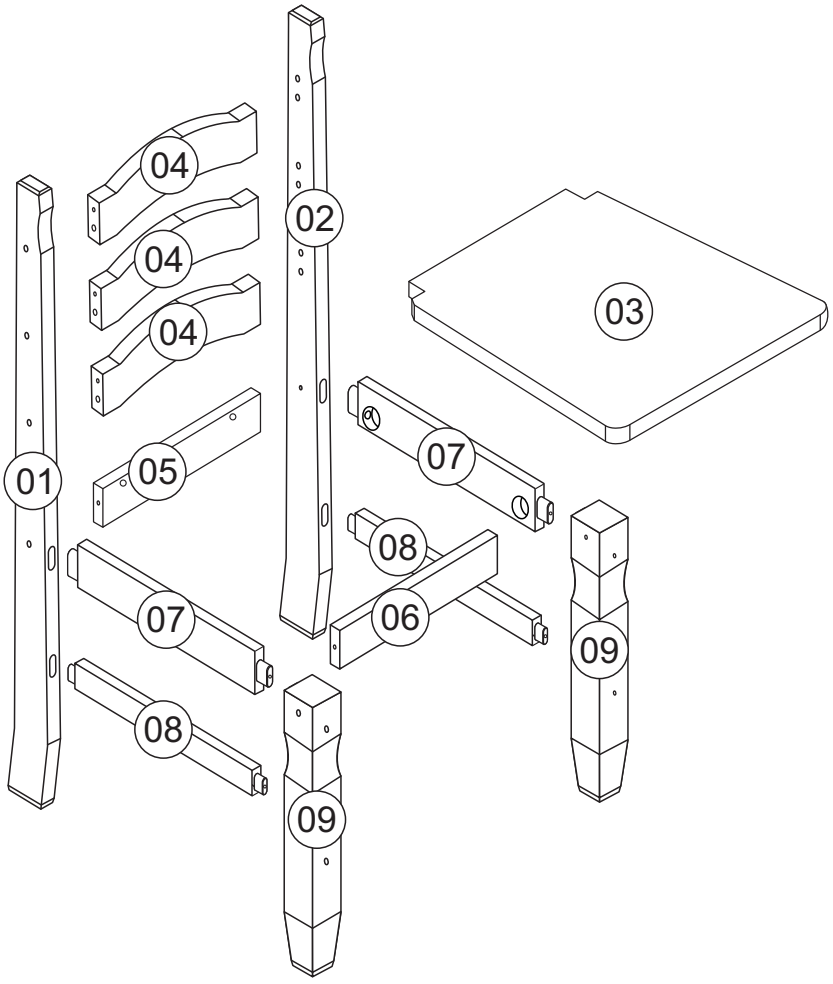

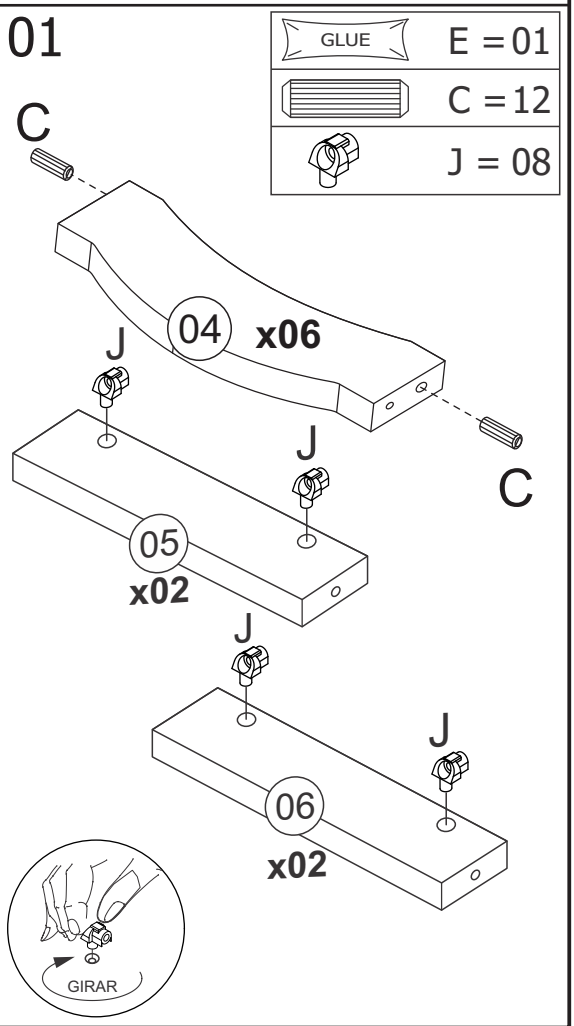

ORDER 2023-08-03

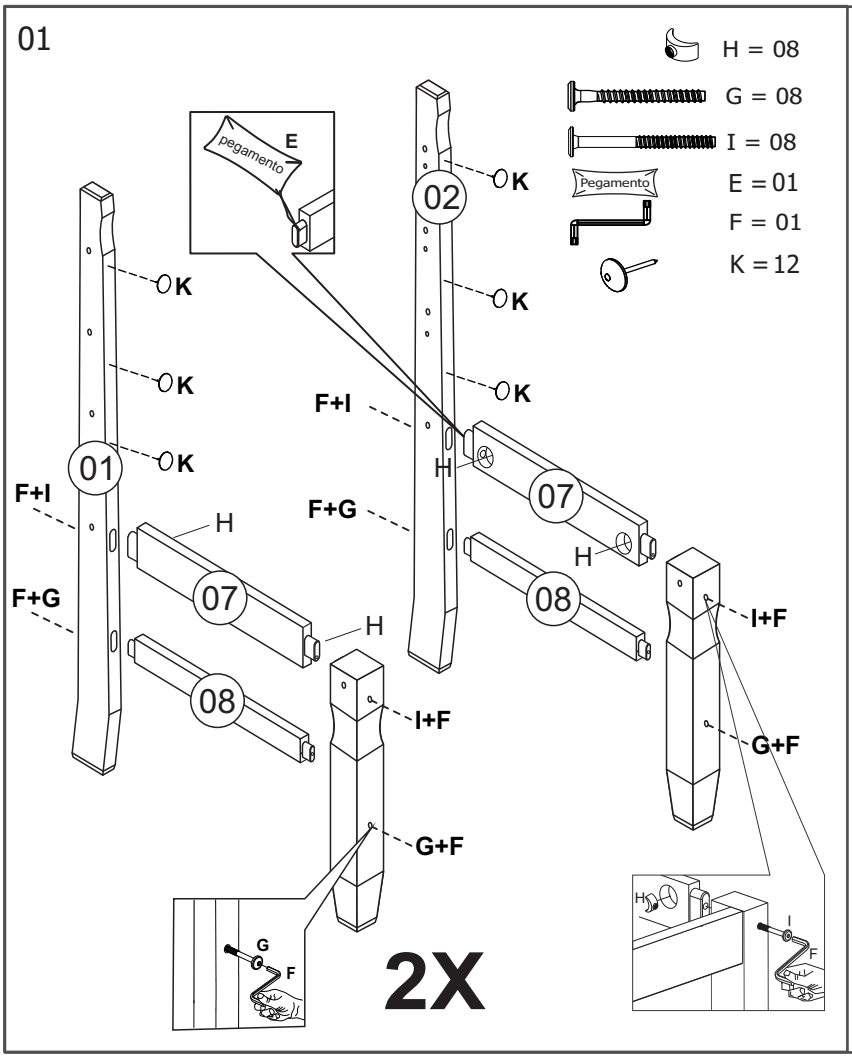
01
H = 08
G = 08
I = 08
E = 01
F = 01
K = 12
pegamento
E
Pegamento
K
01
02
07
08
F+I
F+G
H
I+F
G+F
G
F
I
2X

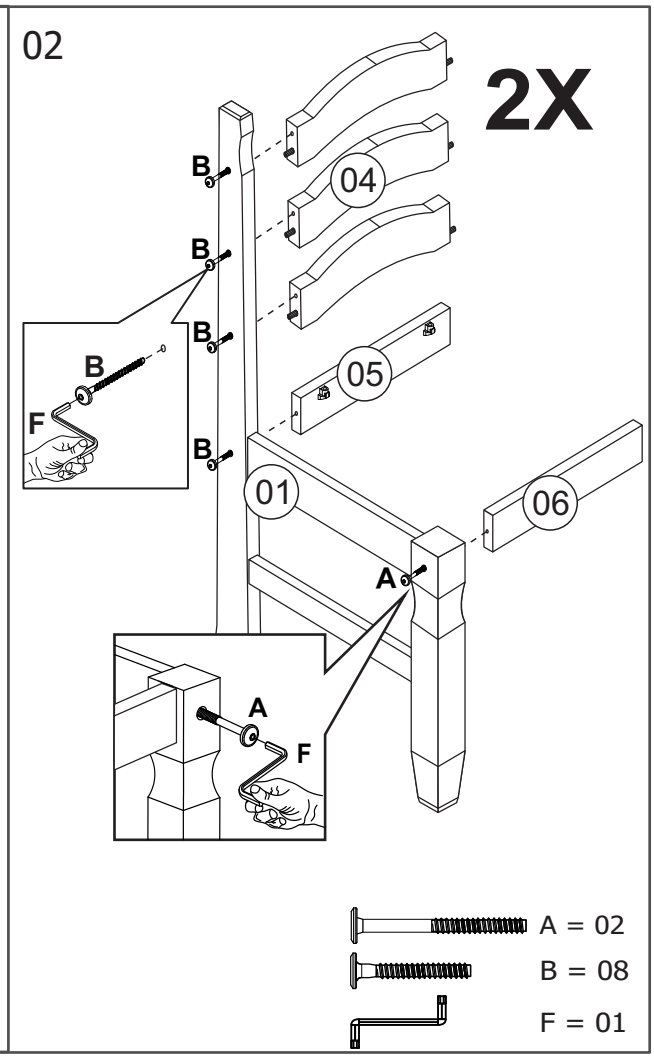
02
2X
B
04
05
01
06
A
F
A = 02
B = 08
F = 01

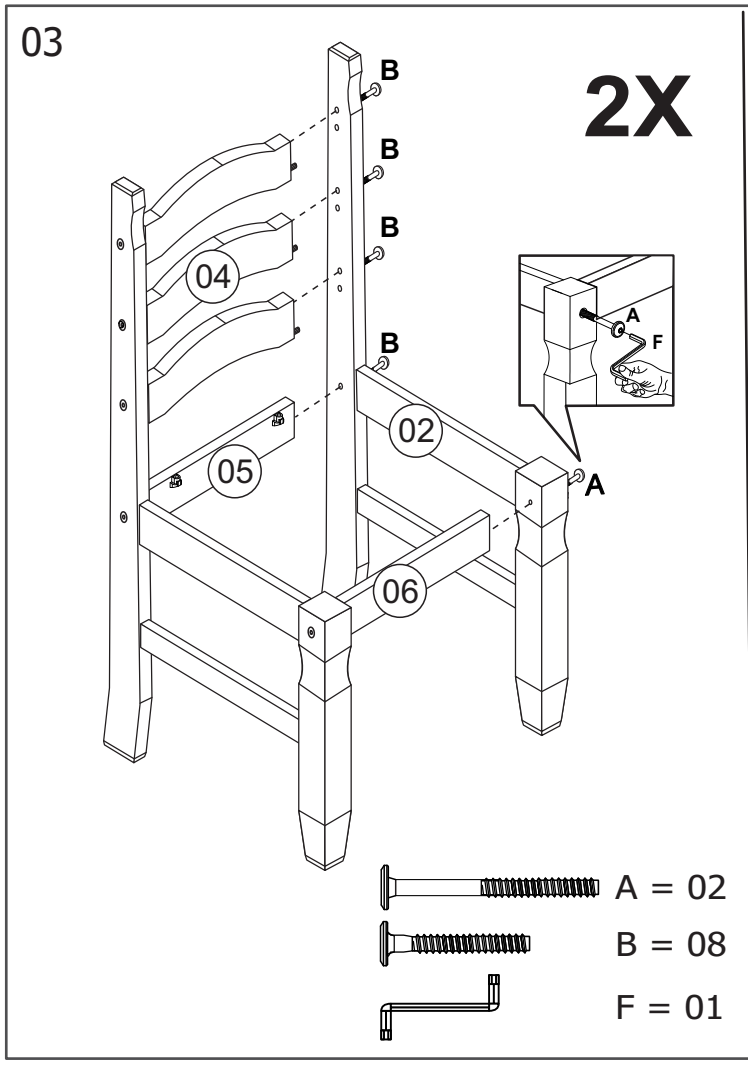
03
2X
B
04
05
02
06
A
F
A = 02
B = 08
F = 01

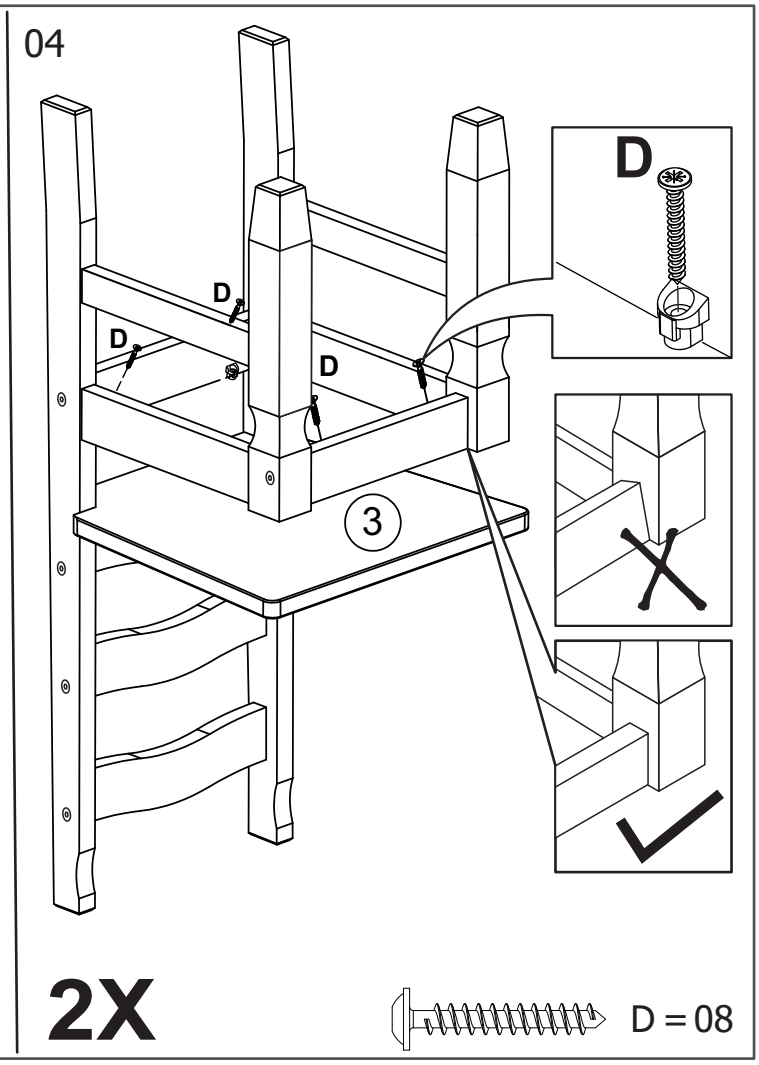
04
D
3
2X
D = 08