Metal Storage Bed Frame
Assembly Instructions

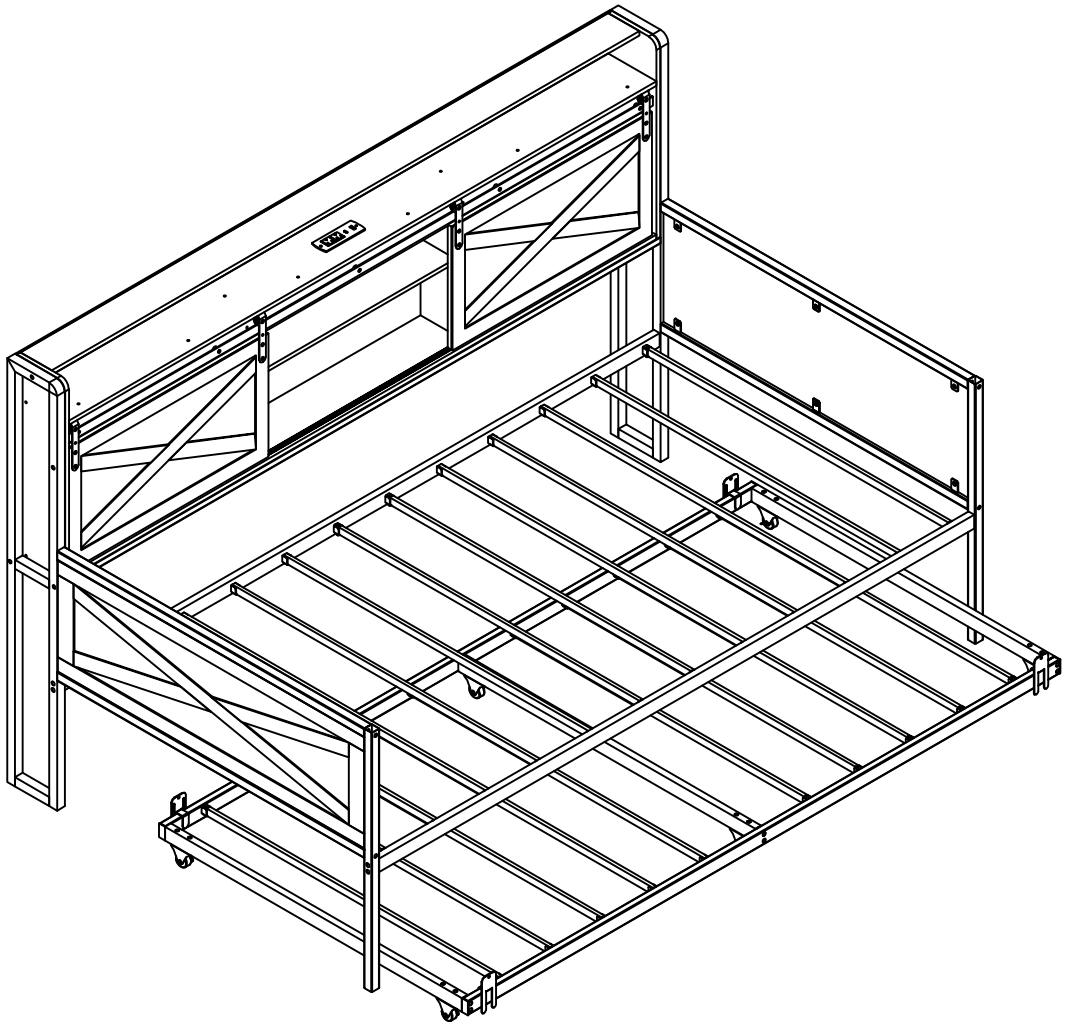

Dear Customers,

Thank you for purchasing our product. Please read this instruction manual carefully after receiving this product. It will help you assemble this product quickly, safely and correctly. You can keep this manual for future reference.

MADE IN CHINA

IMPORTANT

Please follow the instruction manuals and use a pad to protect the product during your assembly.

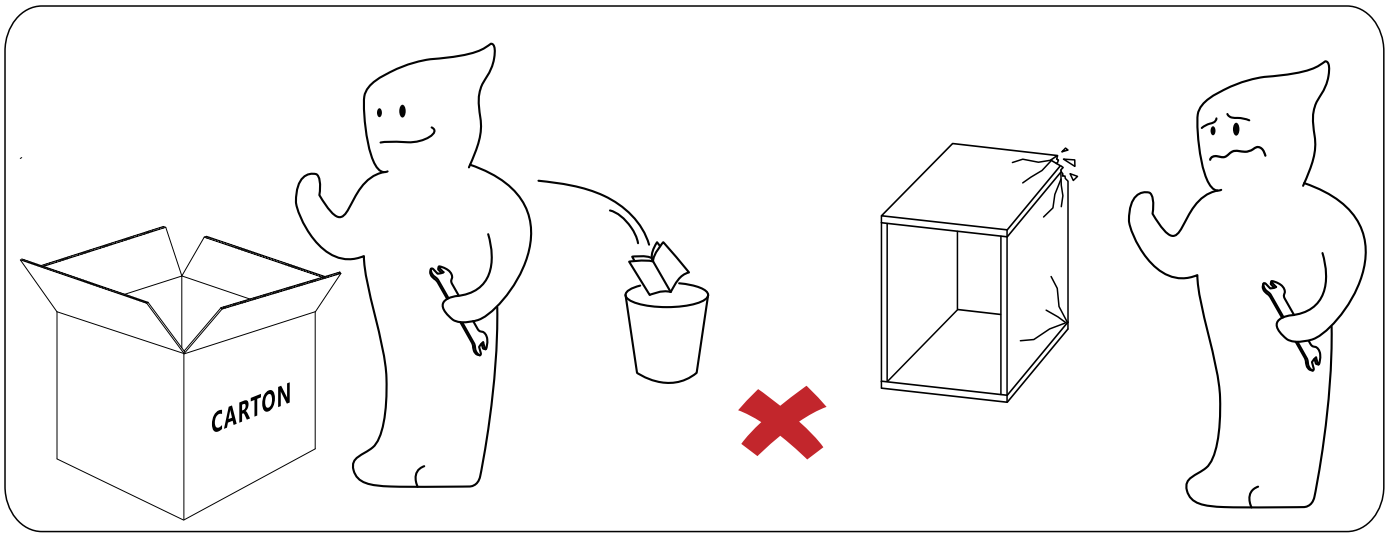

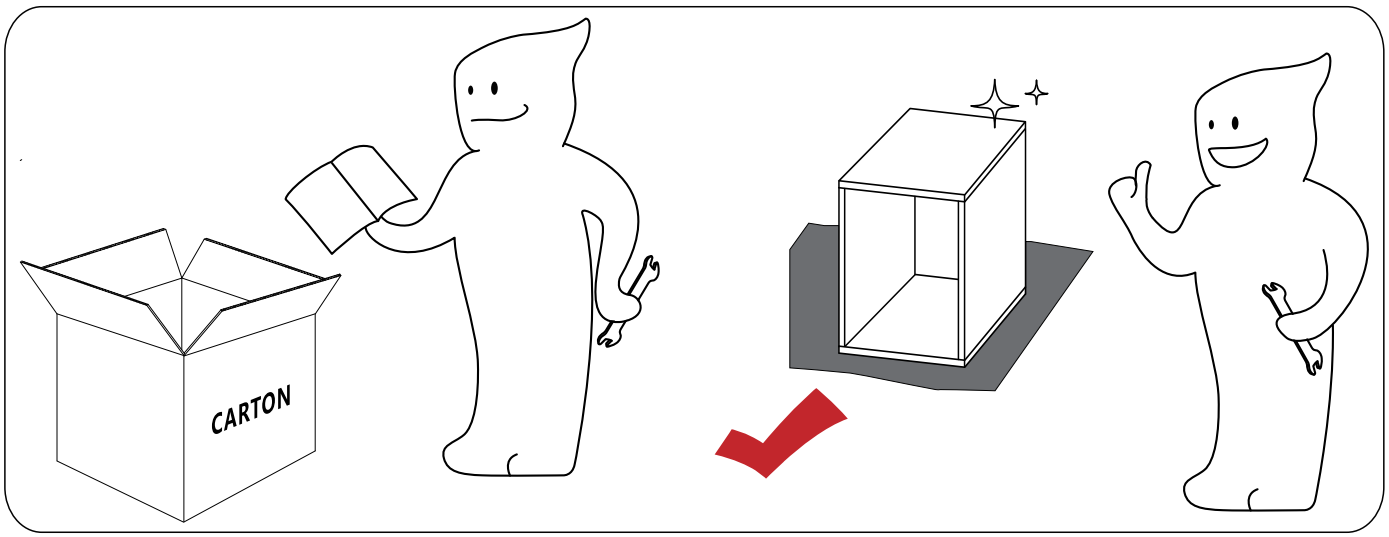

Note:
1. Should be assembled on flat ground to keep balance.
2. Before completing the installation, do not tighten the screws.

For easier and better assembly, **2** or more adults are required.

ASSEMBLY INSTRUCTIONS

DIY LED

33

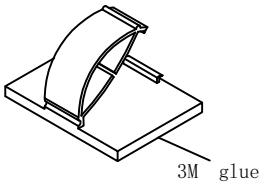

LED strip
with clips

x4

29

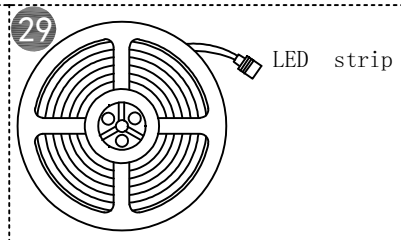

light bar

x1

30

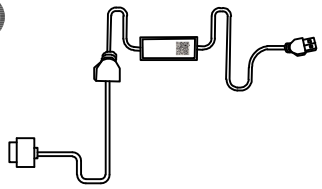

Controller wire

x1

32



Thread embedding
buckle

x3

ASSEMBLY INSTRUCTIONS

PARTS LIST

1 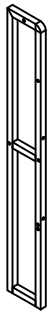 2PCS	2 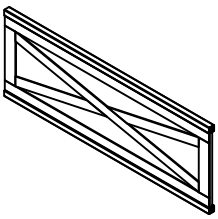 2PCS	3  2PCS	4 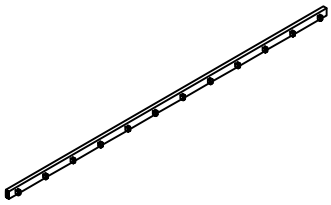 2PCS
5 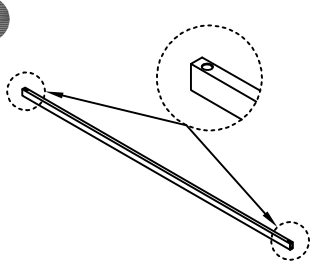 4PCS	6 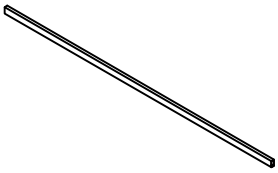 8PCS	7 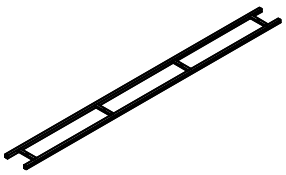 1PC	8 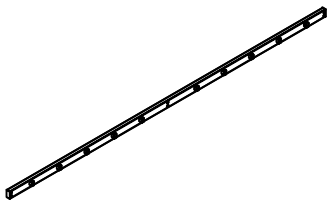 2PCS
9 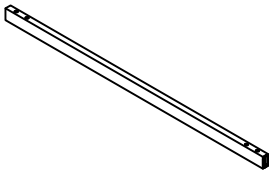 3PCS	10 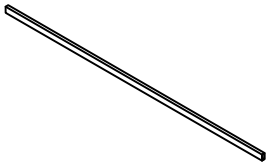 10PCS	11 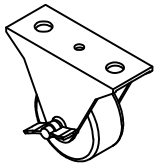 4PCS	12 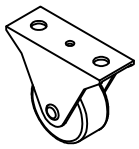 2PCS
13 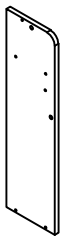 1PC	14 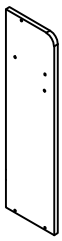 1PC	15 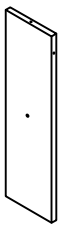 2PCS	16 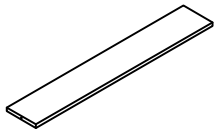 1PC
17 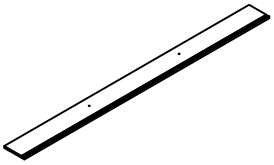 1PC	18 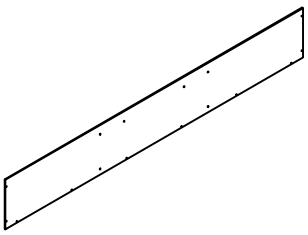 1PC	19 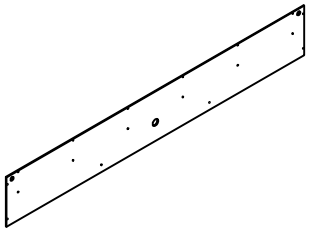 1PC	20 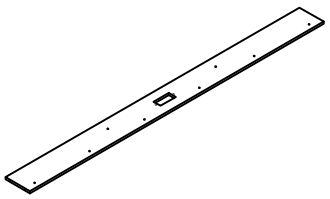 1PC

PARTS LIST

21 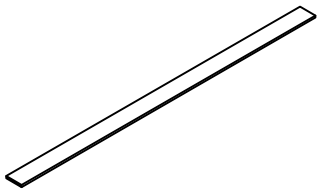 1PC	22 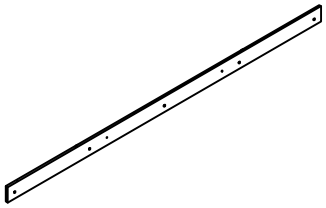 1PC	23 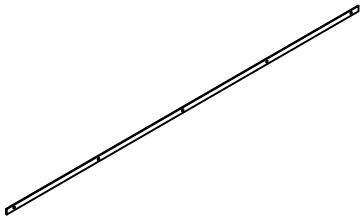 1PC	24  5PCS
25 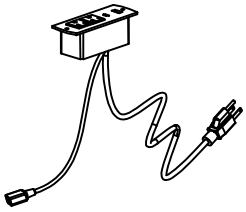 1PC	26 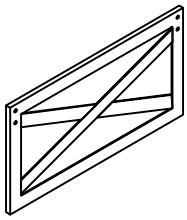 2PCS	27 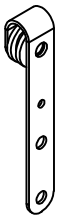 4PCS	28 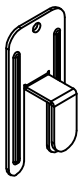 4PCS
29 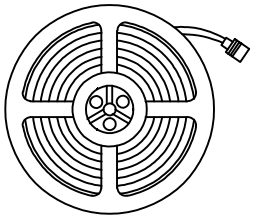 light bar 1PC	30 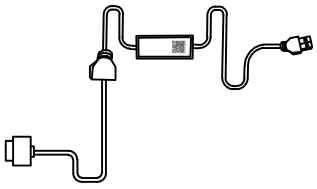 1PC	31  Remote control 1PC	32  Thread embedding buckle 3PCS
33 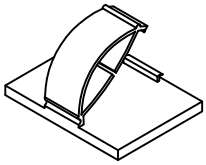 4PCS			

HARDWARE LIST

A  M8*40 20PCS	B  M6*45 12PCS	C 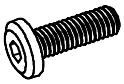 M5*25 8PCS	D 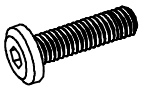 M6*32 4PCS
E 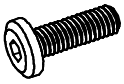 M6*22 5PCS	F  M6*48 12PCS	G  M6*12 8PCS	H  ϕ6 24PCS
I  S4 1PC	J 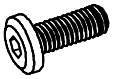 M6*18 8PCS	K  ϕ5*35 60PCS	L 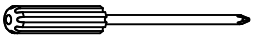 1PC
M 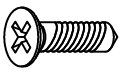 M3*12 2PCS	N  S3 1PC		

1

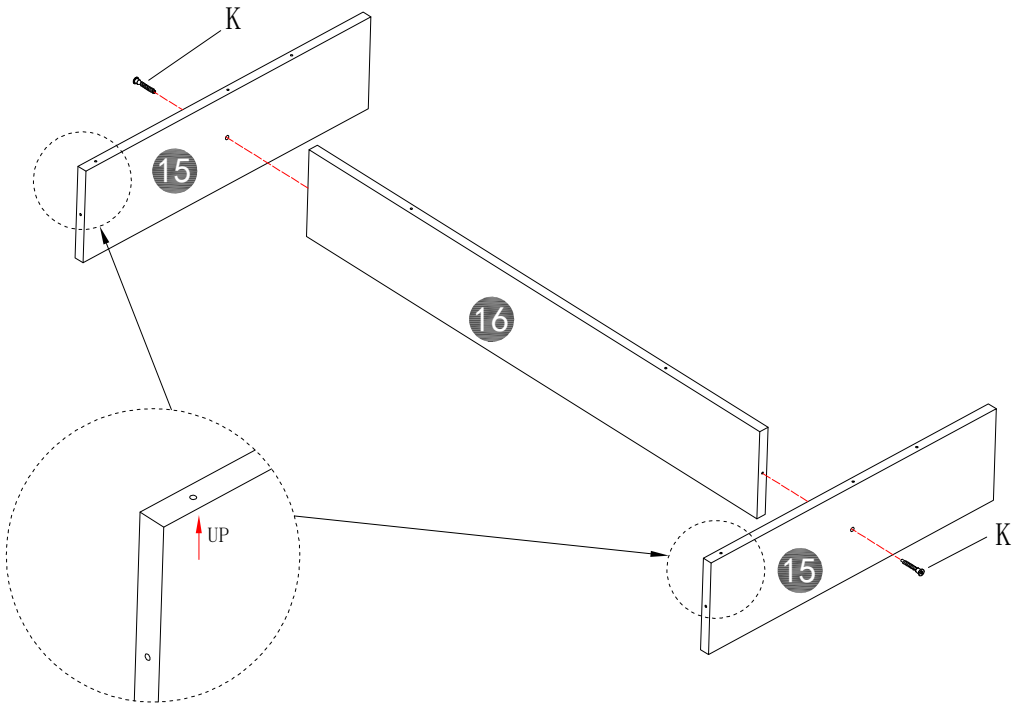

K		2PCS
N		

2

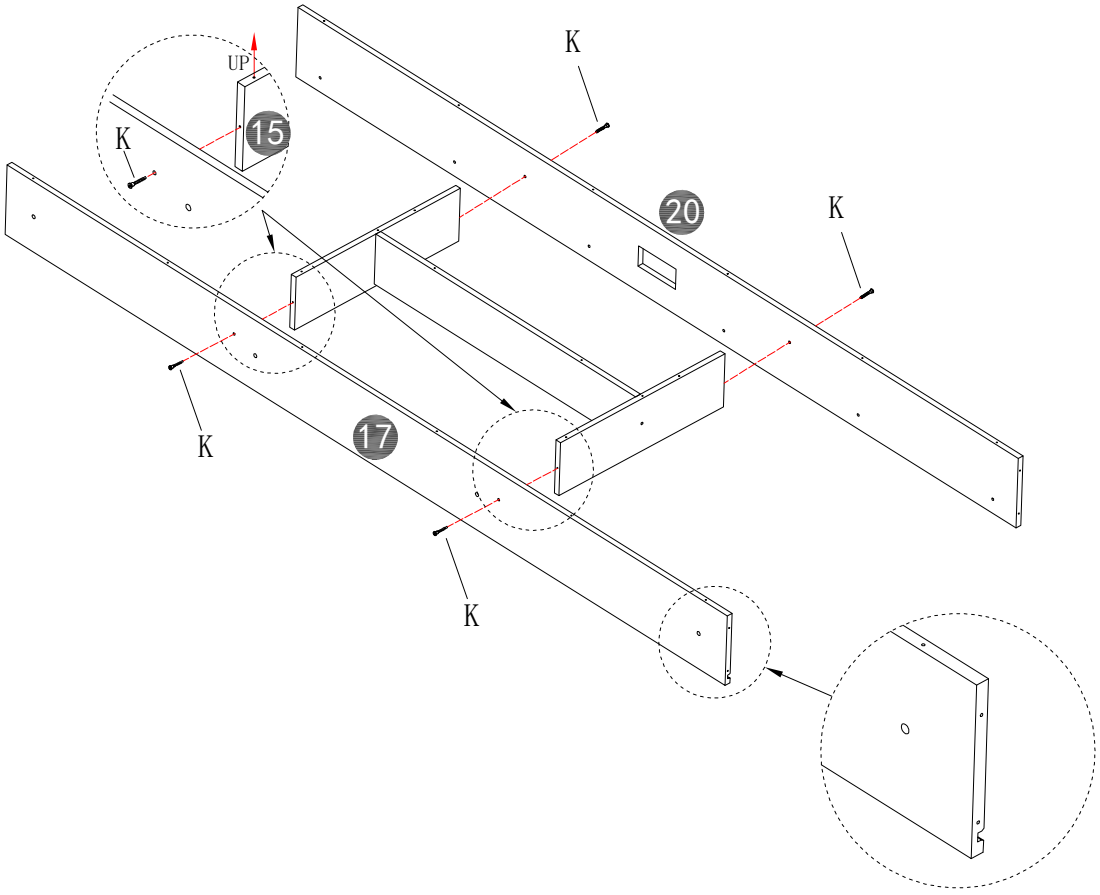

K		4PCS
N		

3

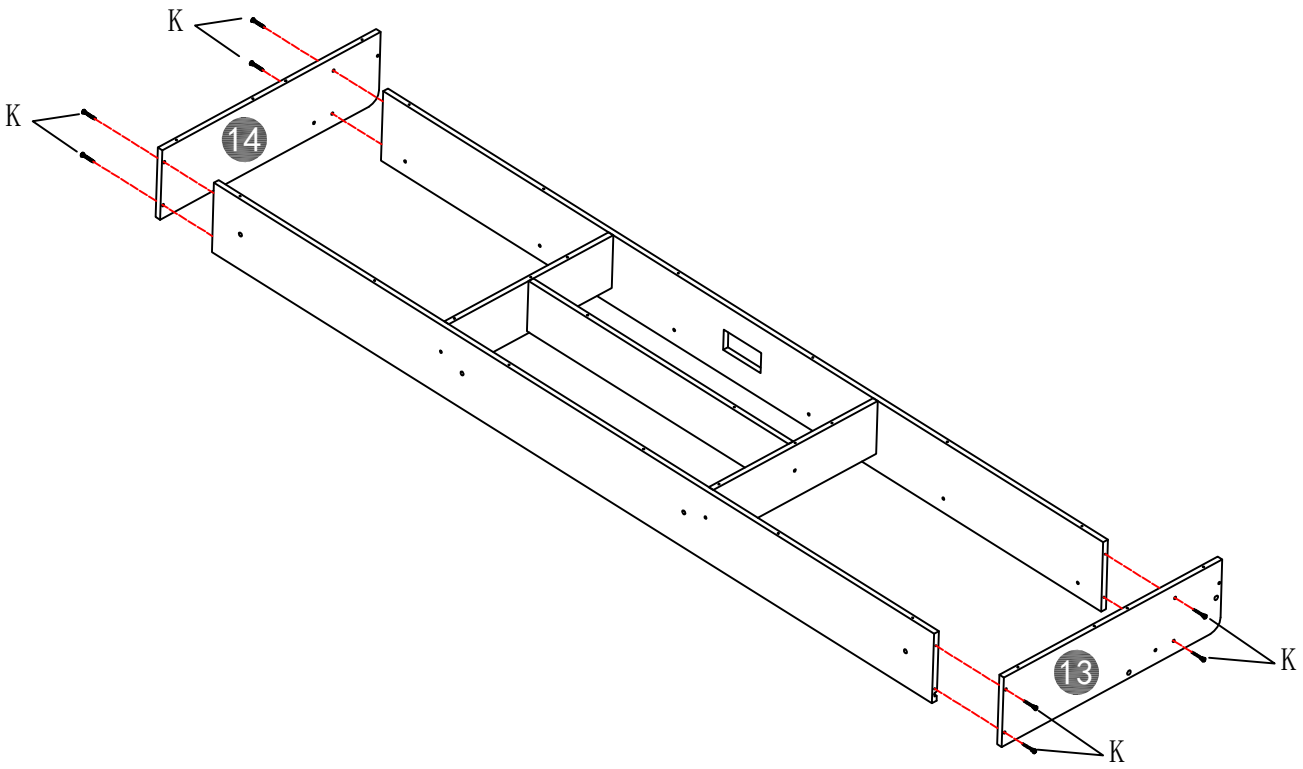

K		8PCS
N		

4

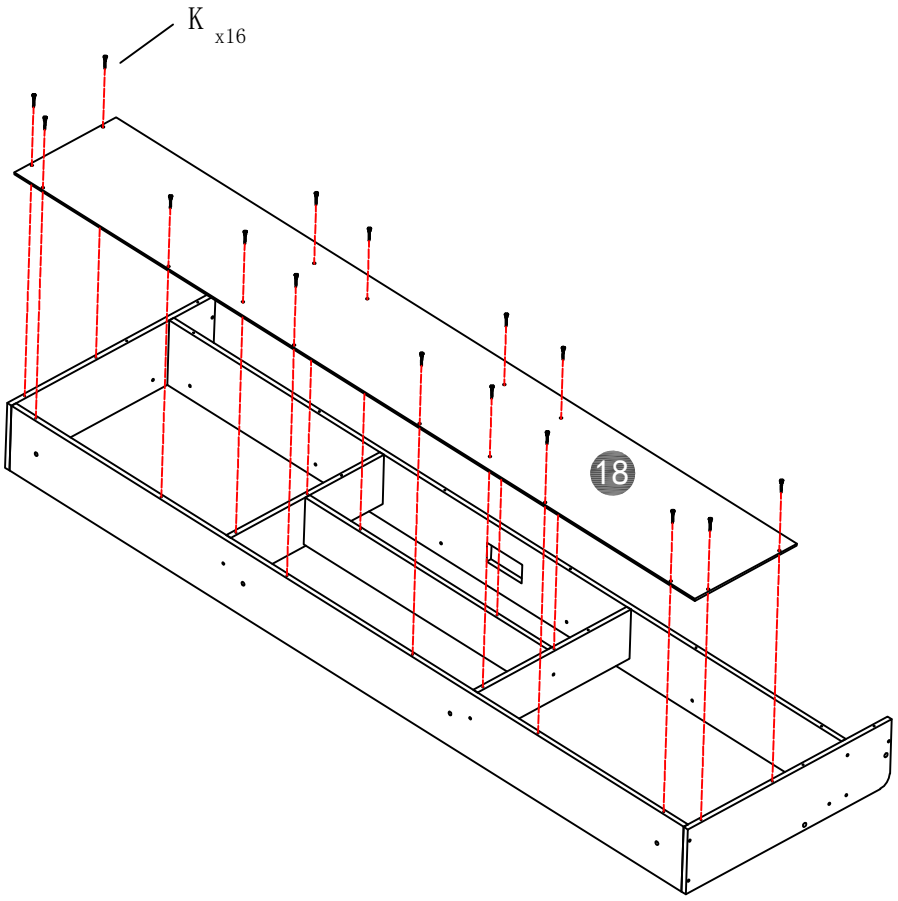

K		16PCS
N		

5

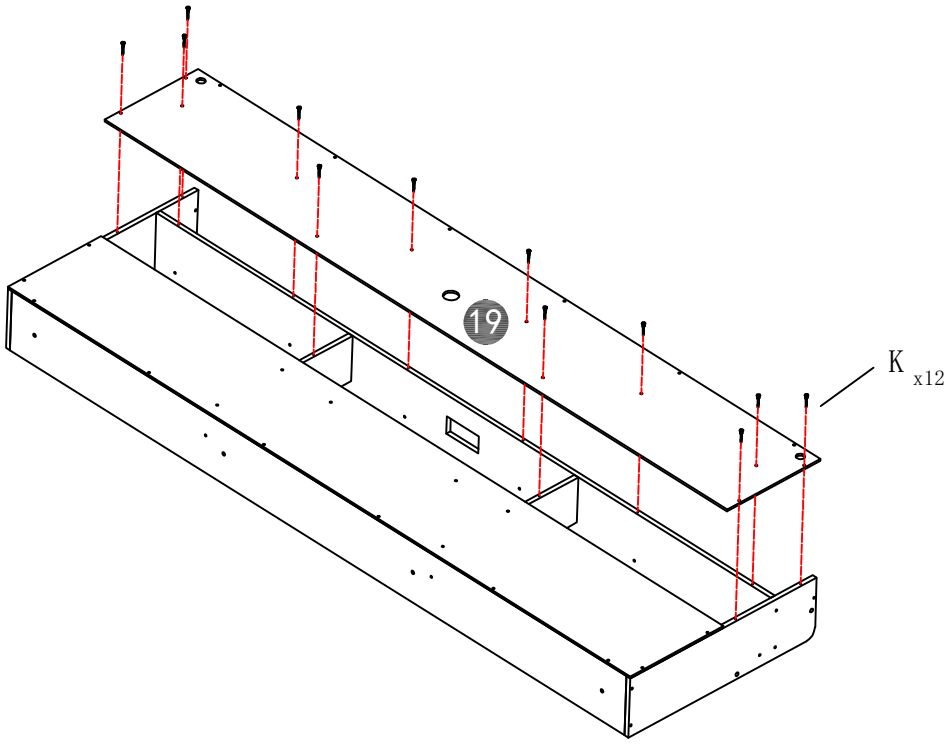

K		12PCS
N		

6

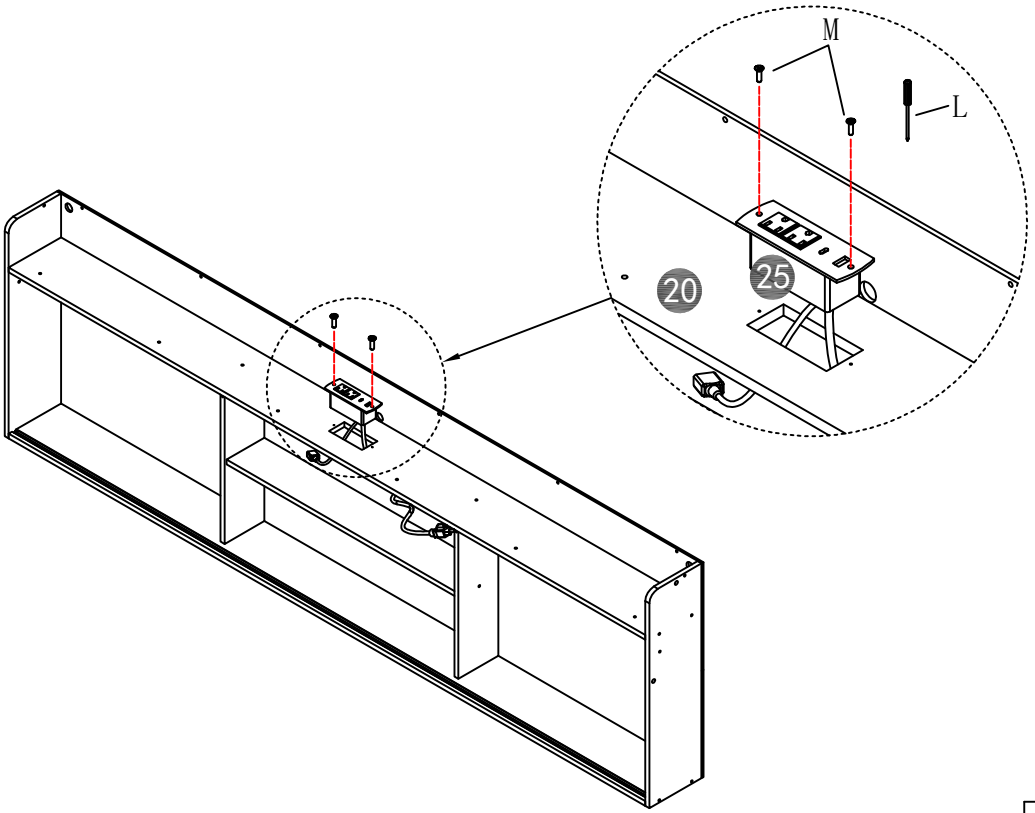

M		2PCS
L		

7

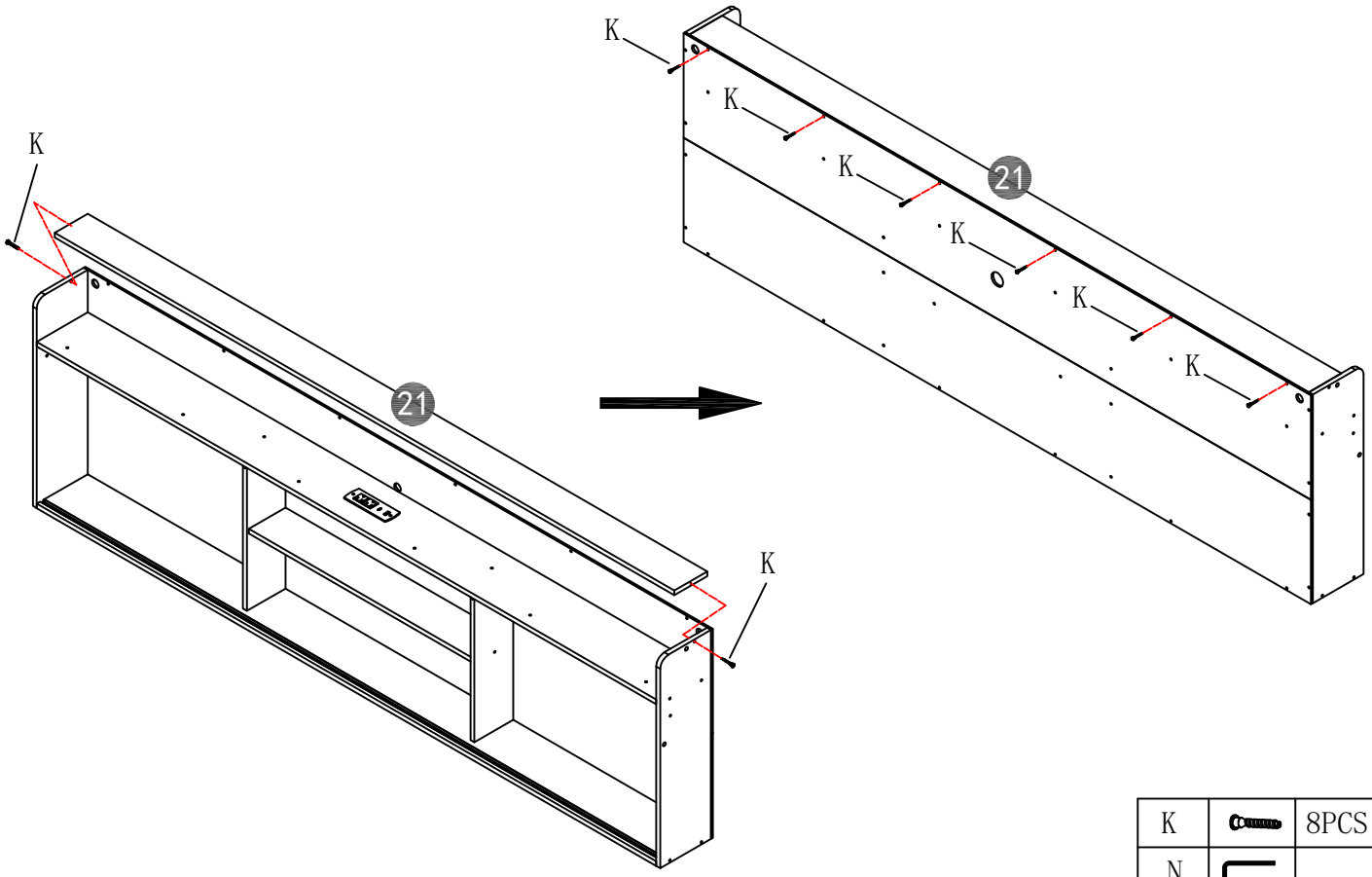

K		8PCS
N		

8

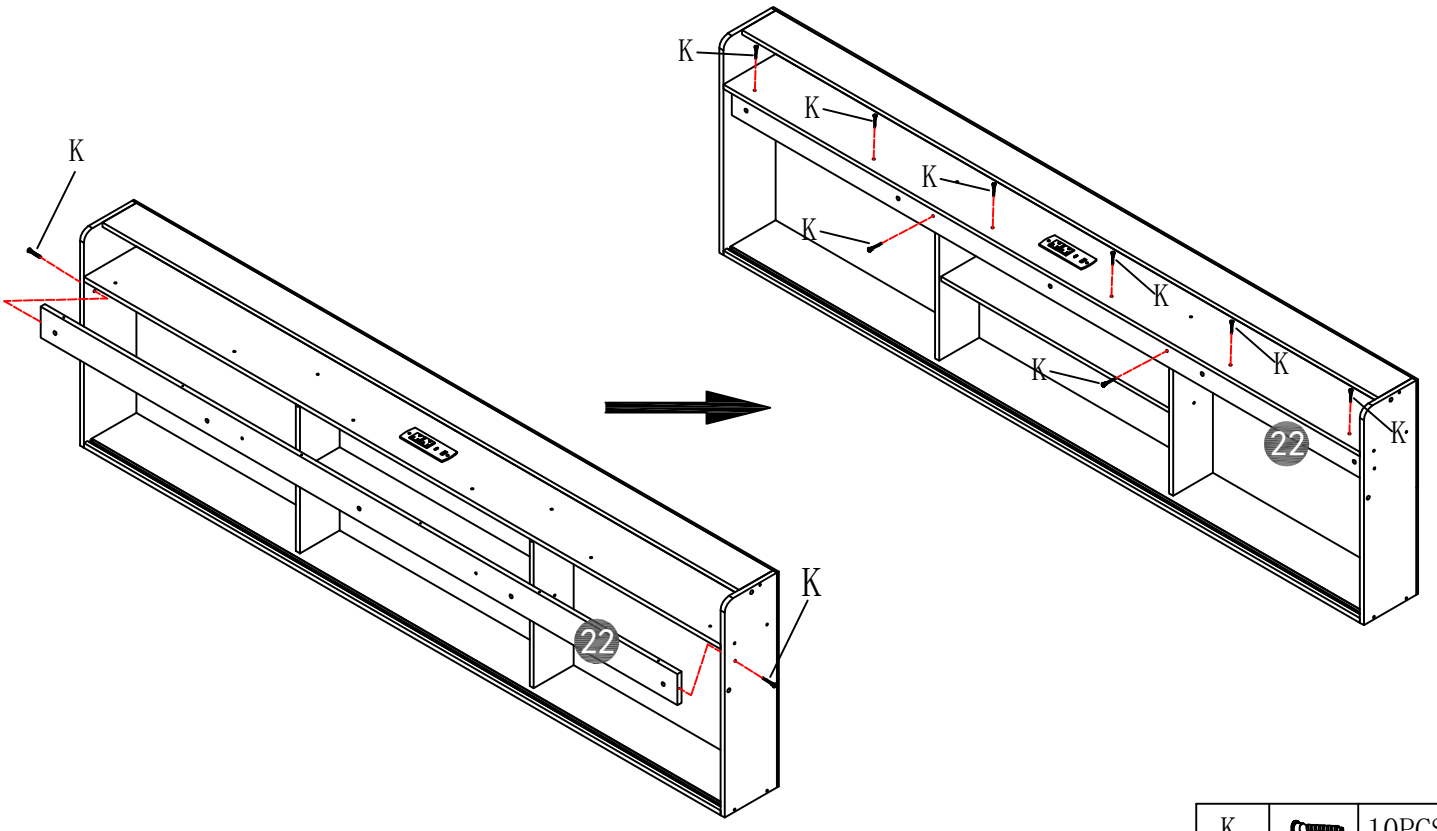

K		10PCS
N		

9

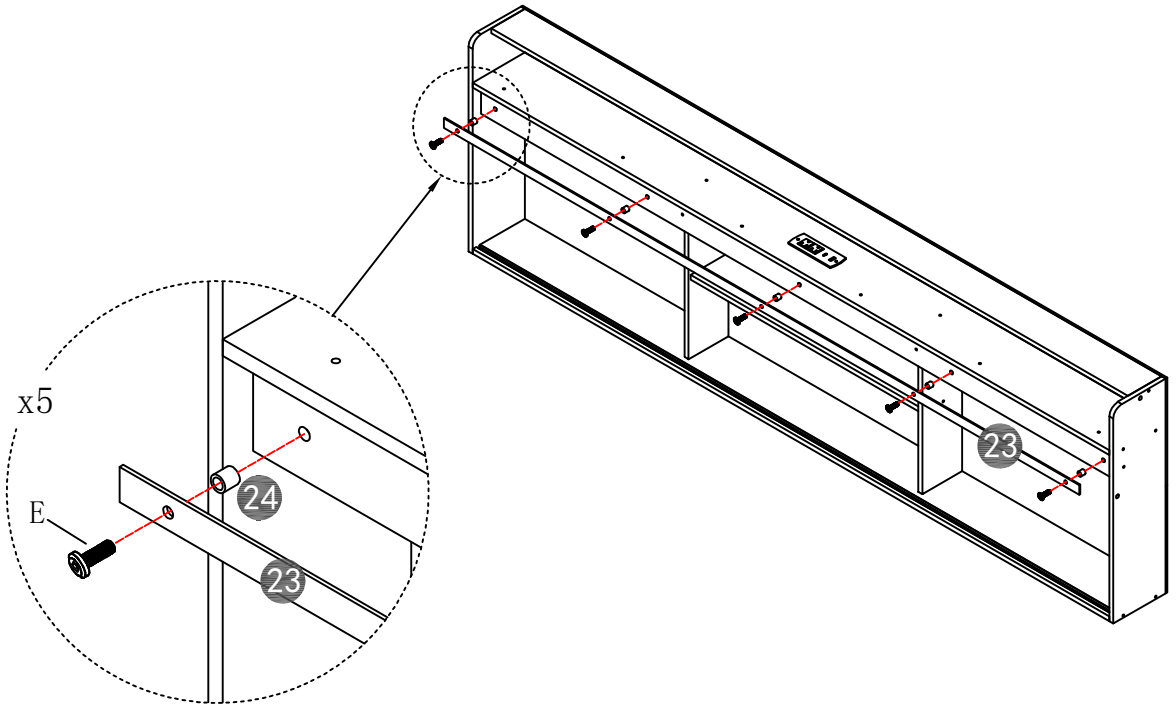

E		5PCS
I		

10

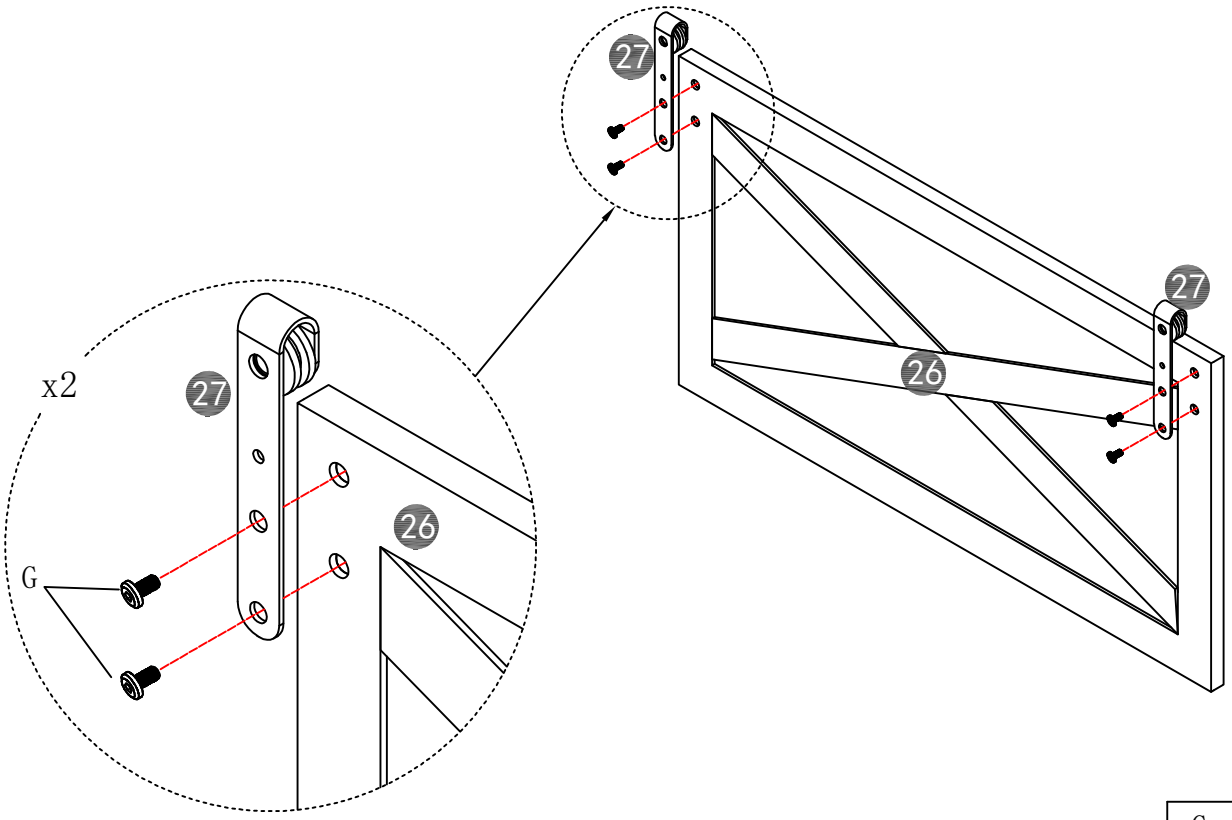

G		8PCS
I		

11

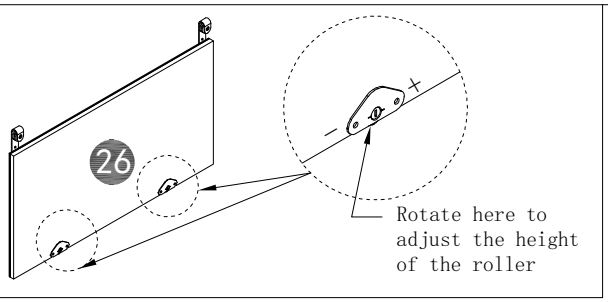
26
Rotate here to
adjust the height
of the roller

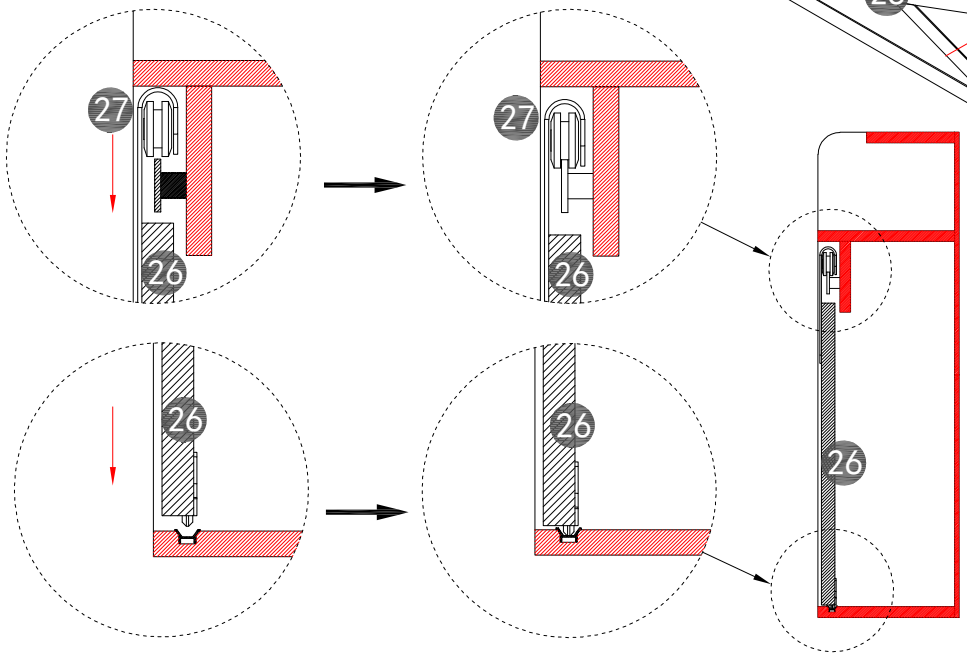
27
26
27
26
26
26
26

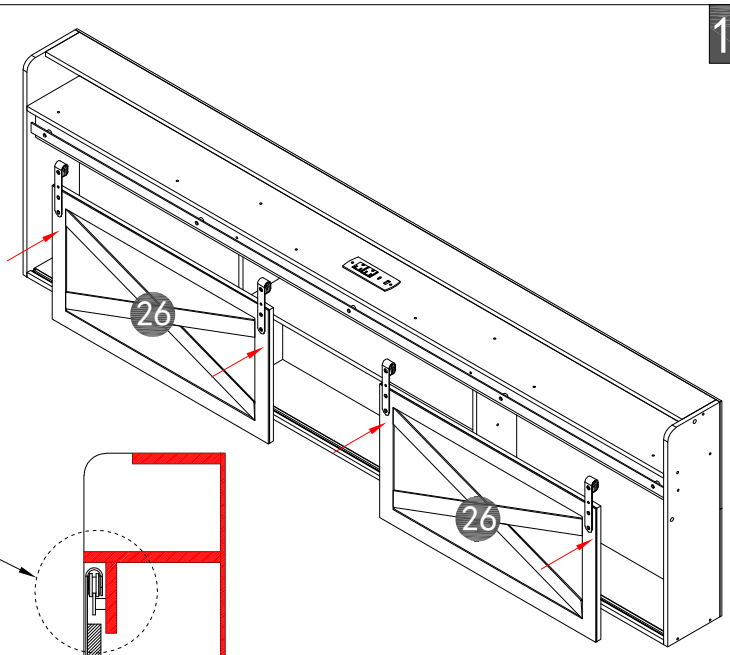
26
26

12

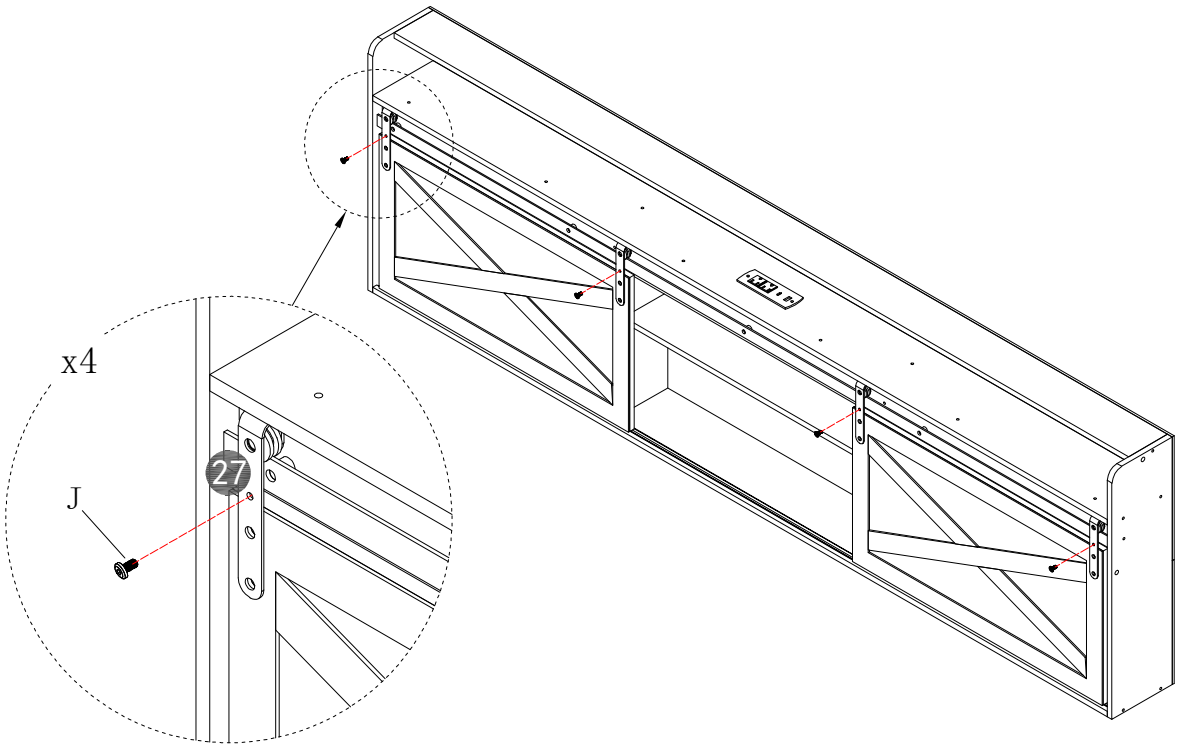
x4
J
27

J		4PCS
I		

13

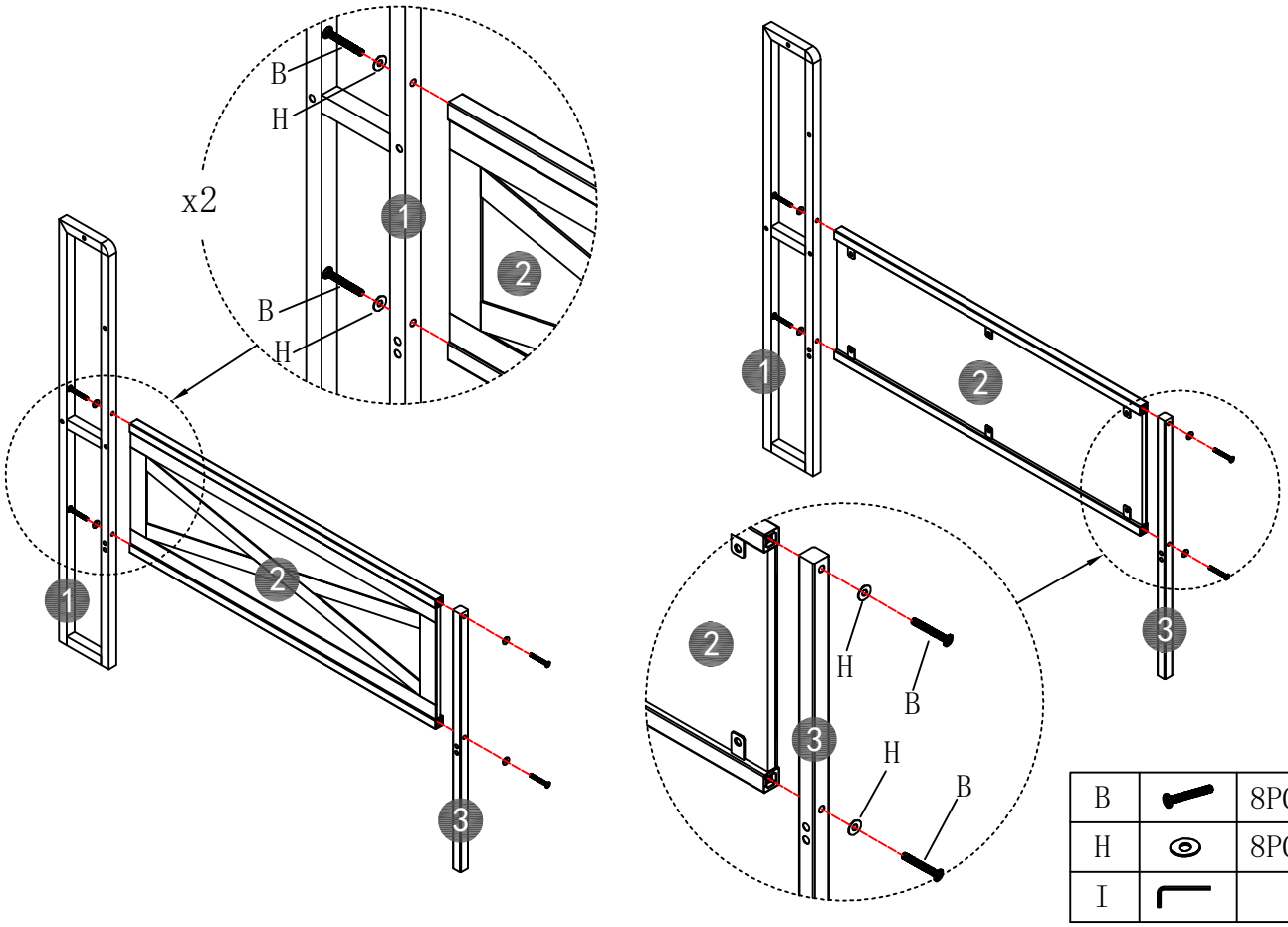

B		8PCS
H		8PCS
I		

14

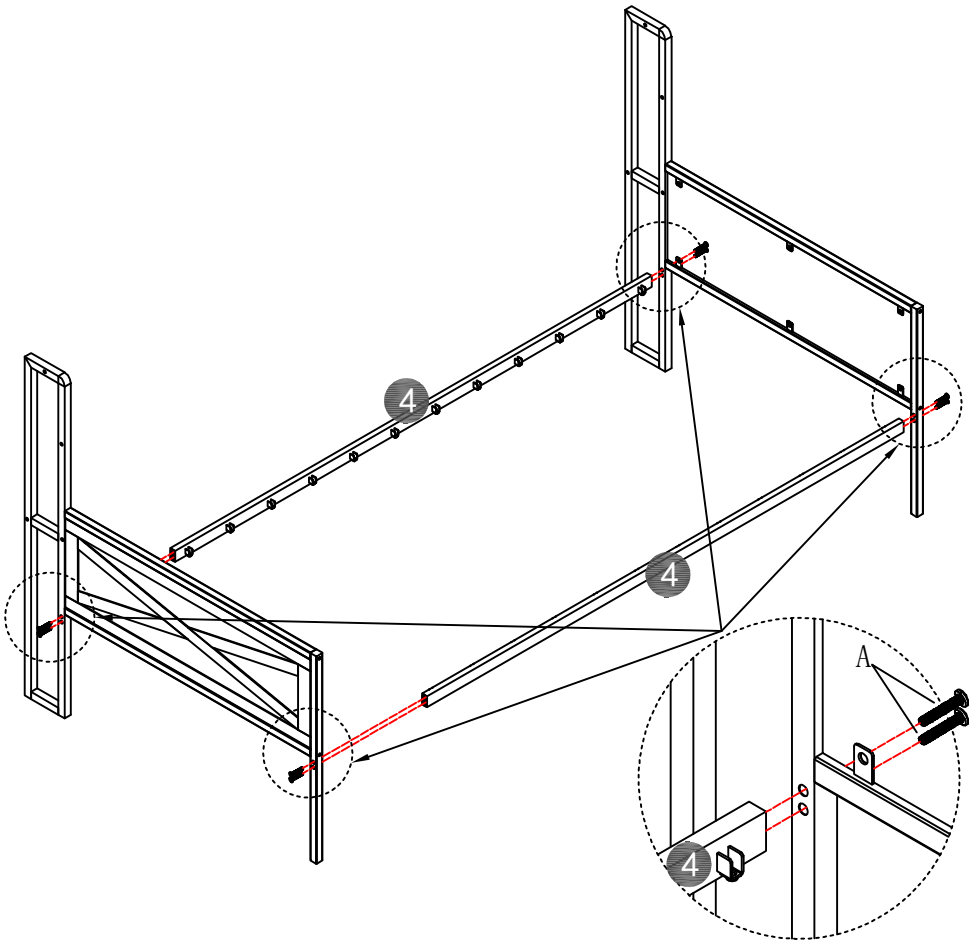

A		8PCS
I		

15

Do not tighten the screws, just fix them.

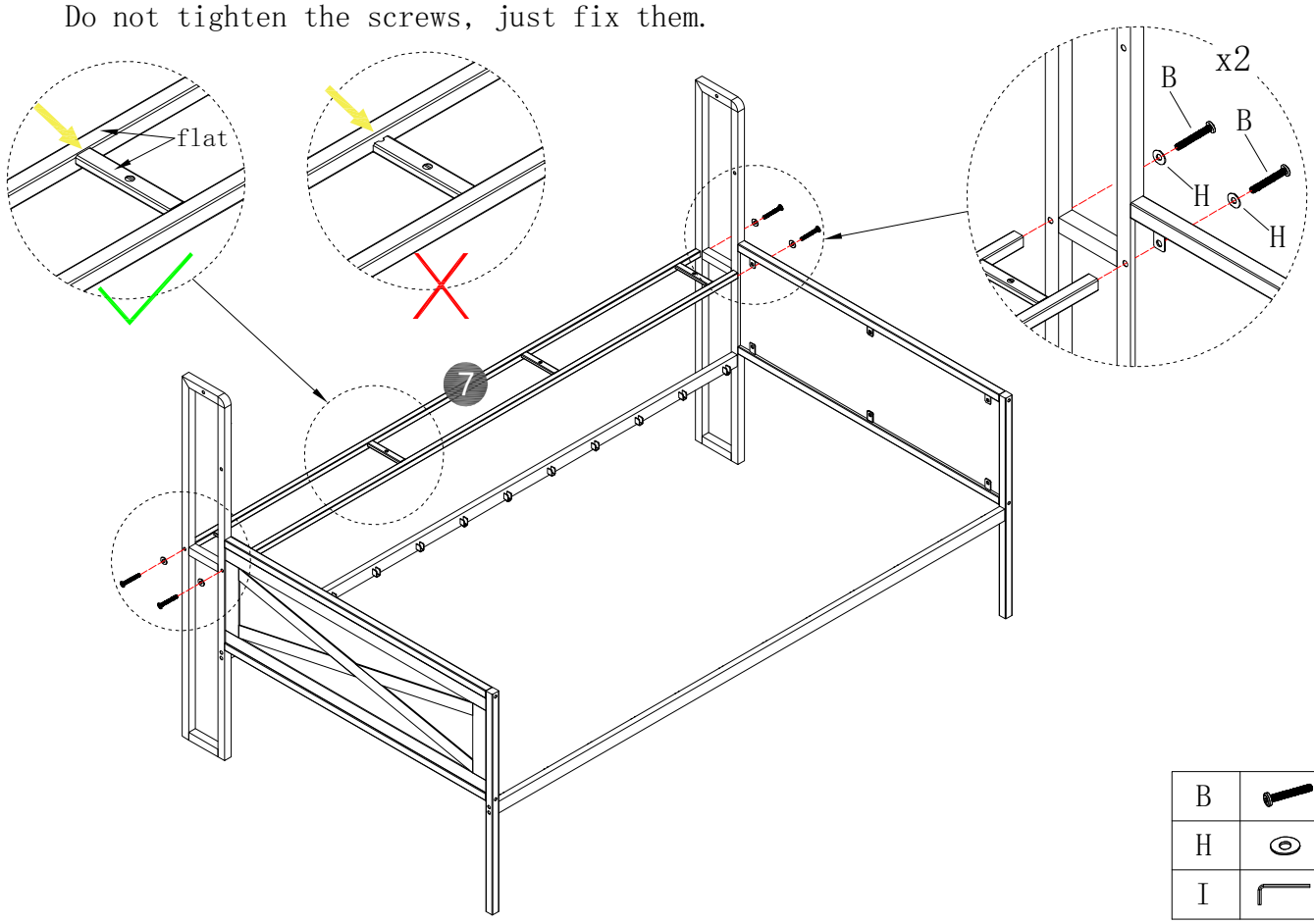

B		4PCS
H		4PCS
I		

16

Tighten all the screws on it.

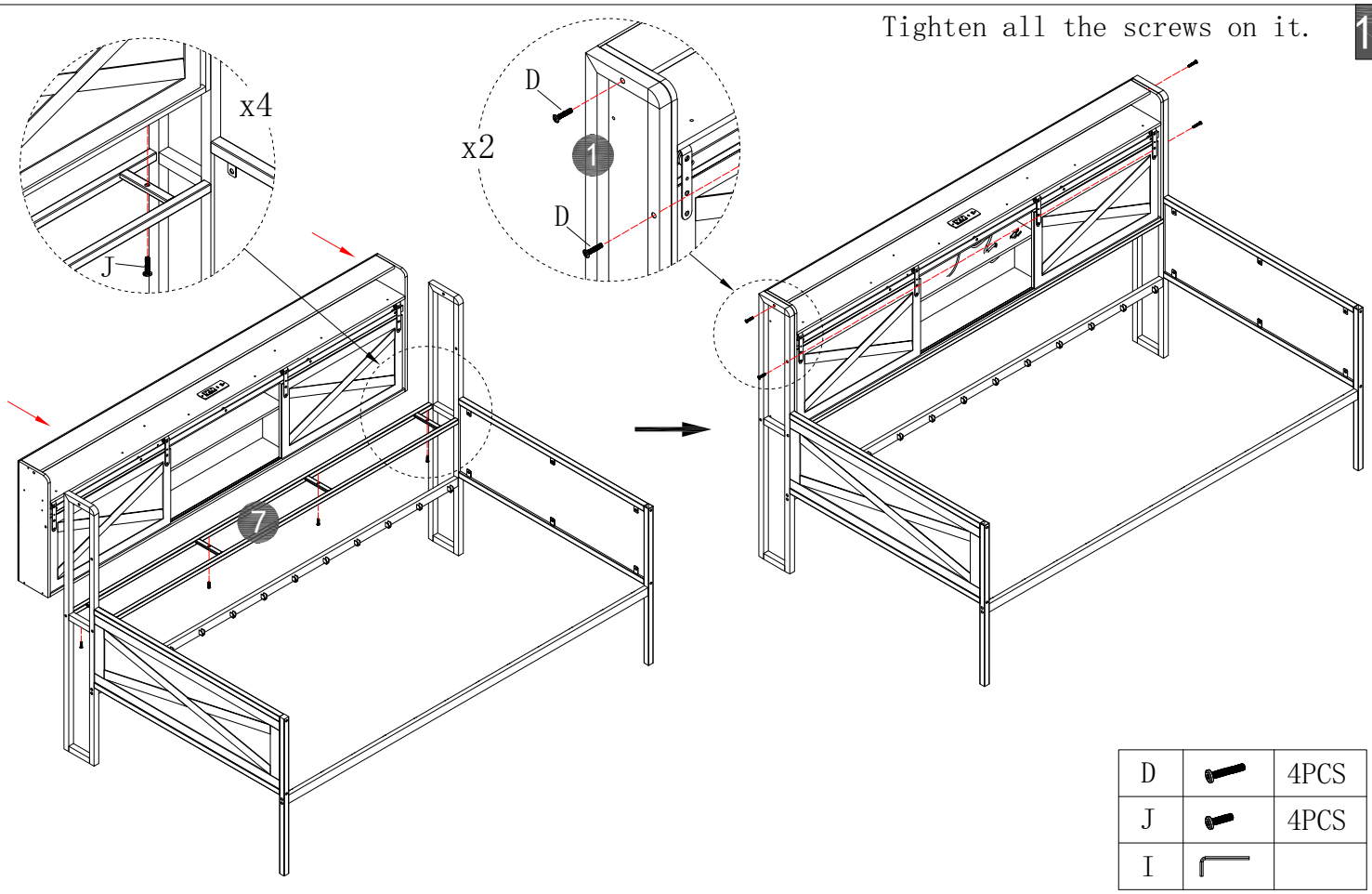

D		4PCS
J		4PCS
I		

17

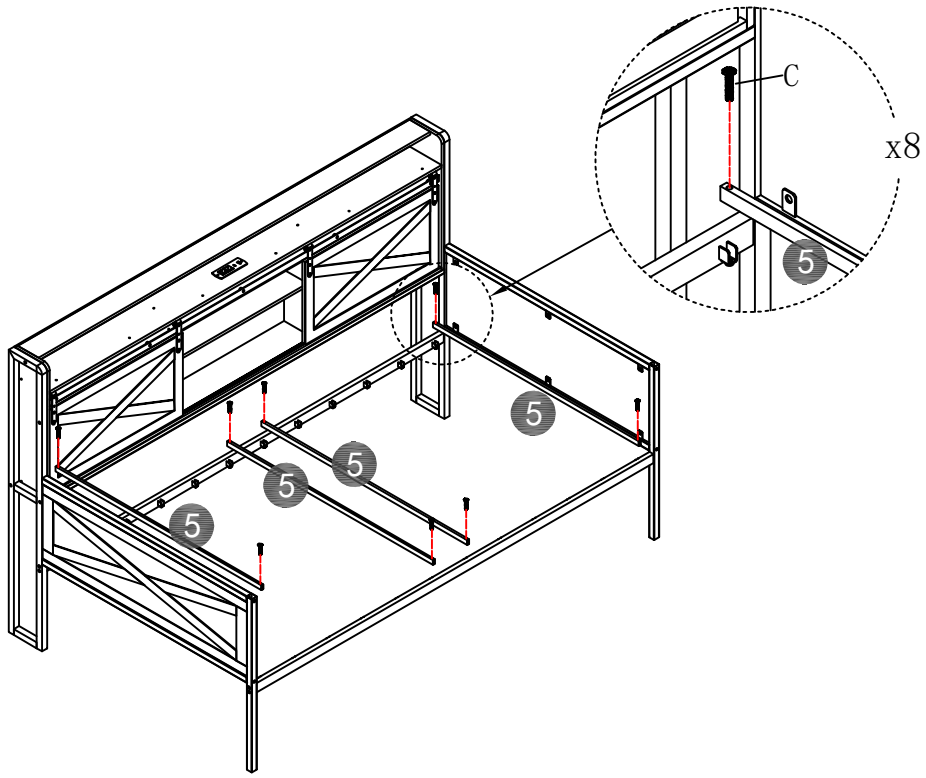

C		8PCS
I		

18

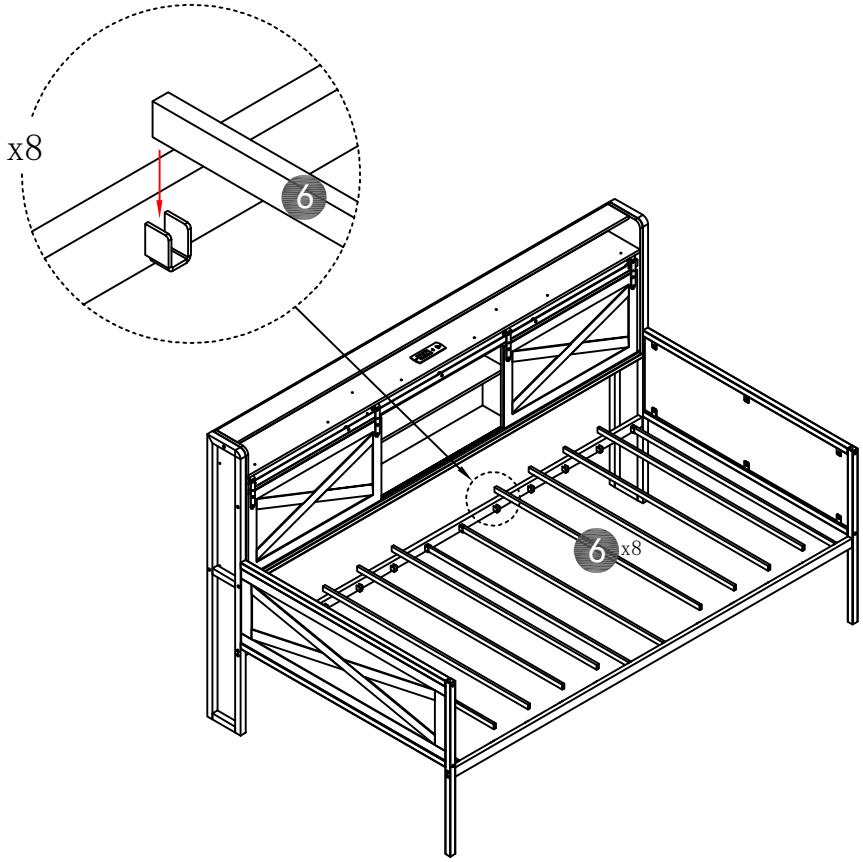

DIY LED

29 LED strip

light bar

30

Controller wire

32

Thread embedding buckle

33

3M glue

LED strip with clips

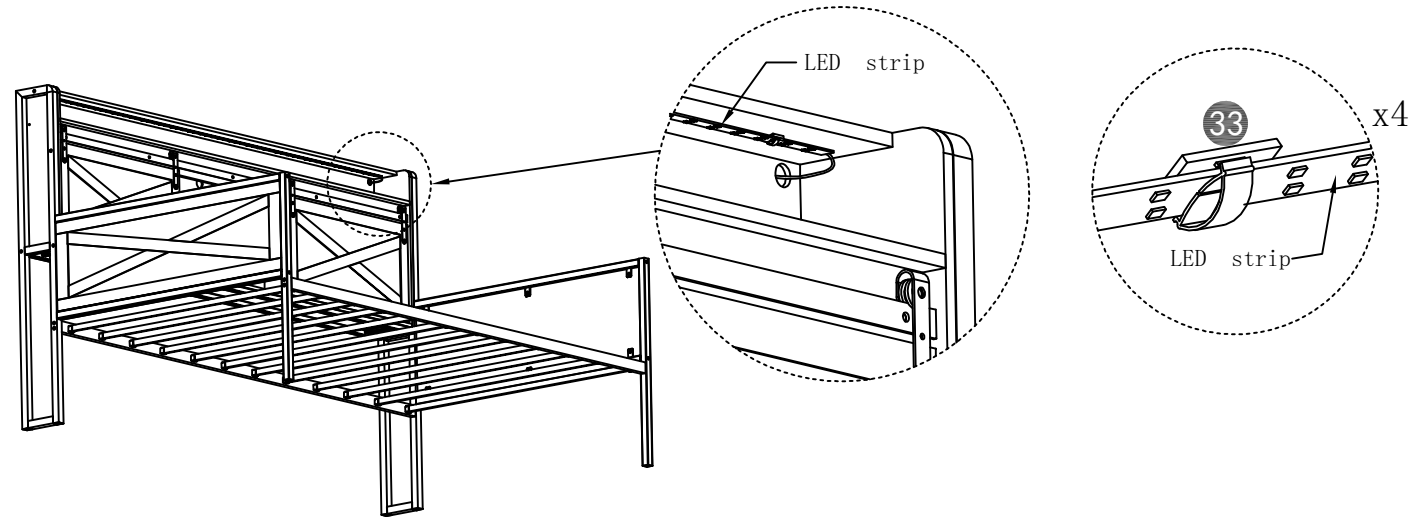

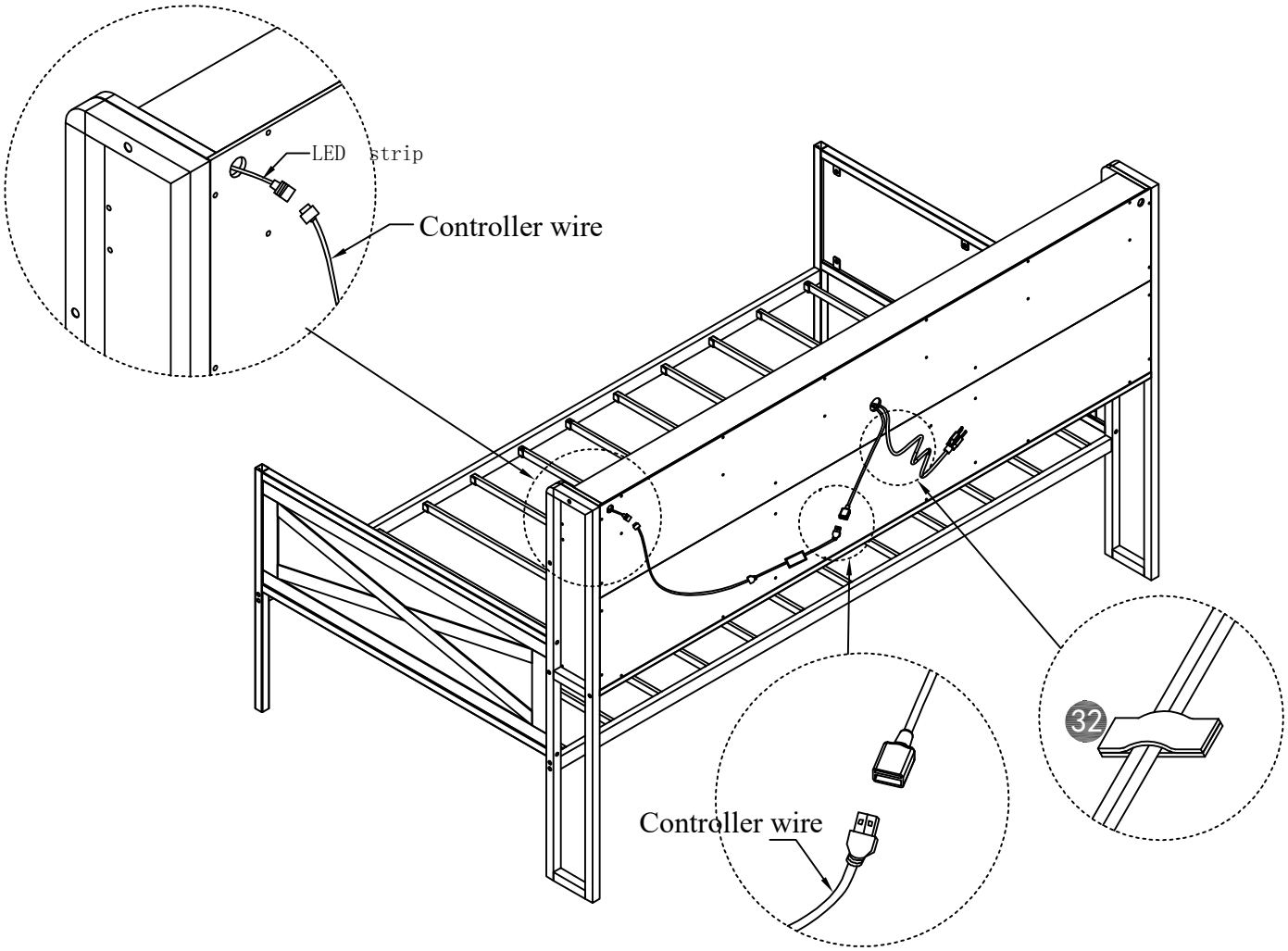

20

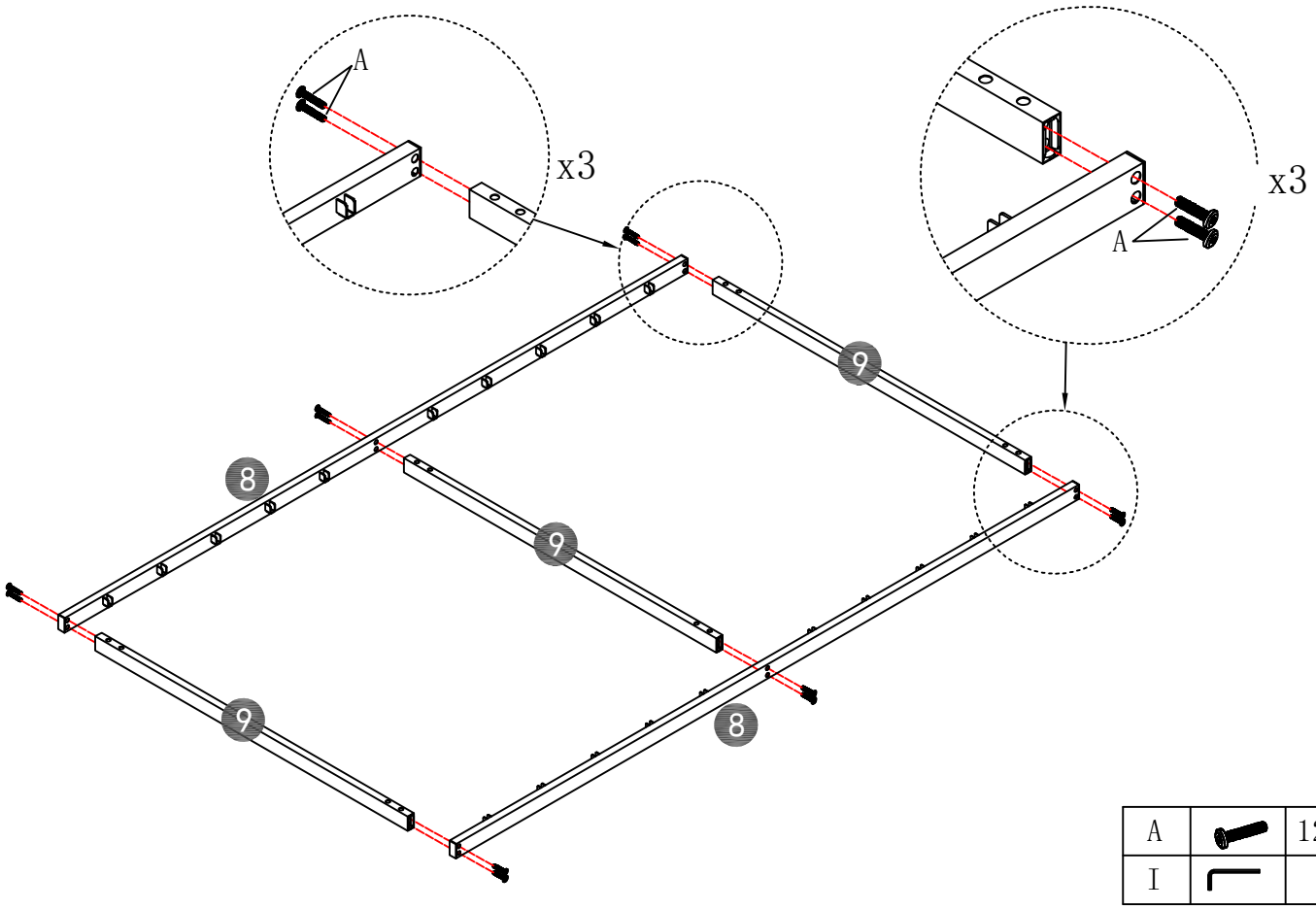

A		12PCS
I		

21

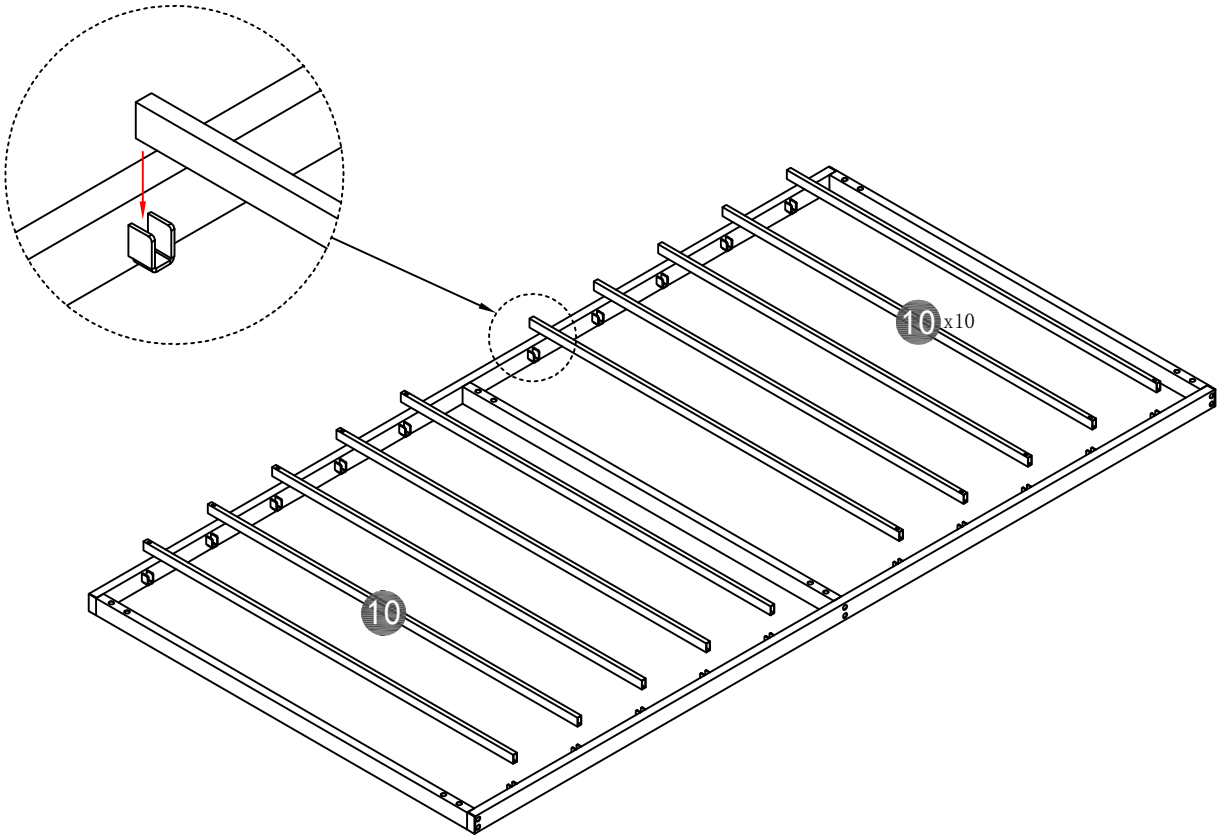

22

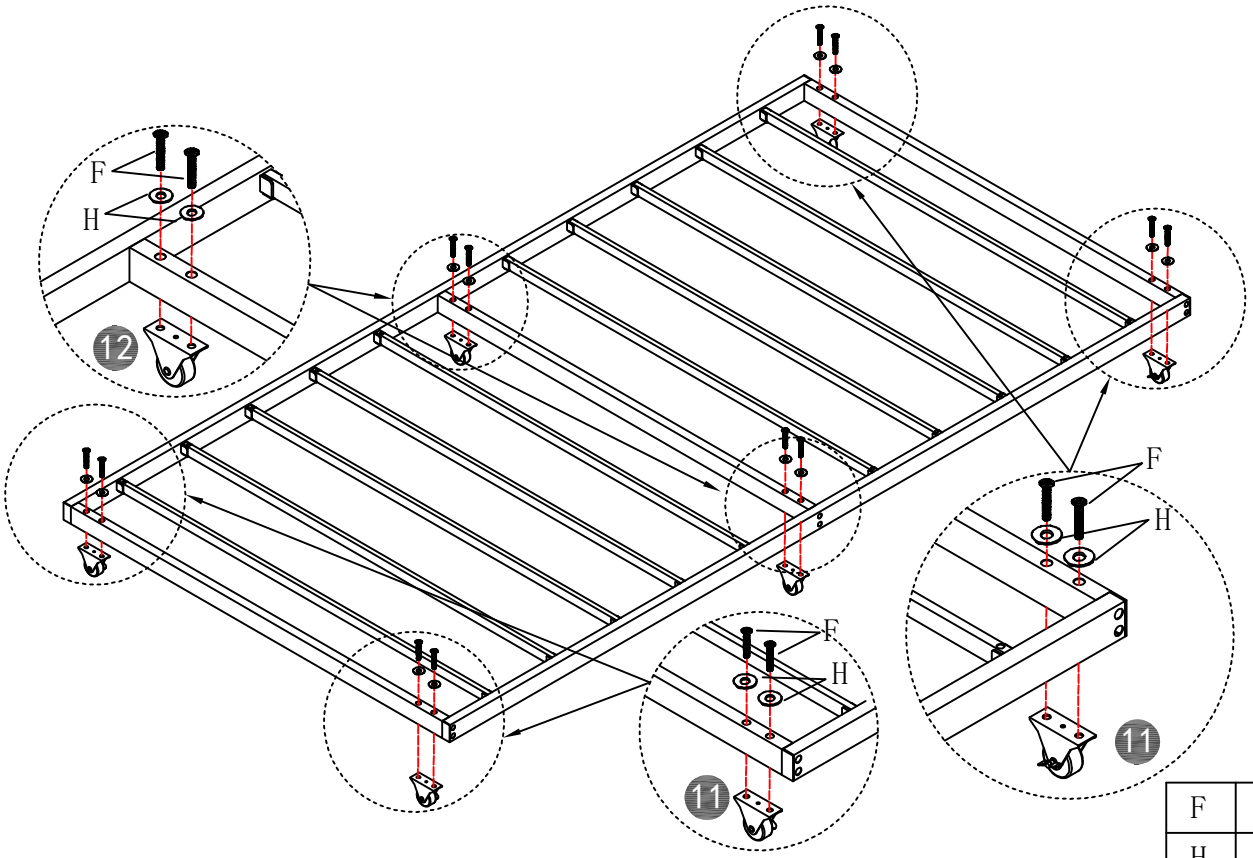

F		12PCS
H		12PCS
I		

caster wheels with brakes
Please install the wheel with brake pads facing inwards.

23

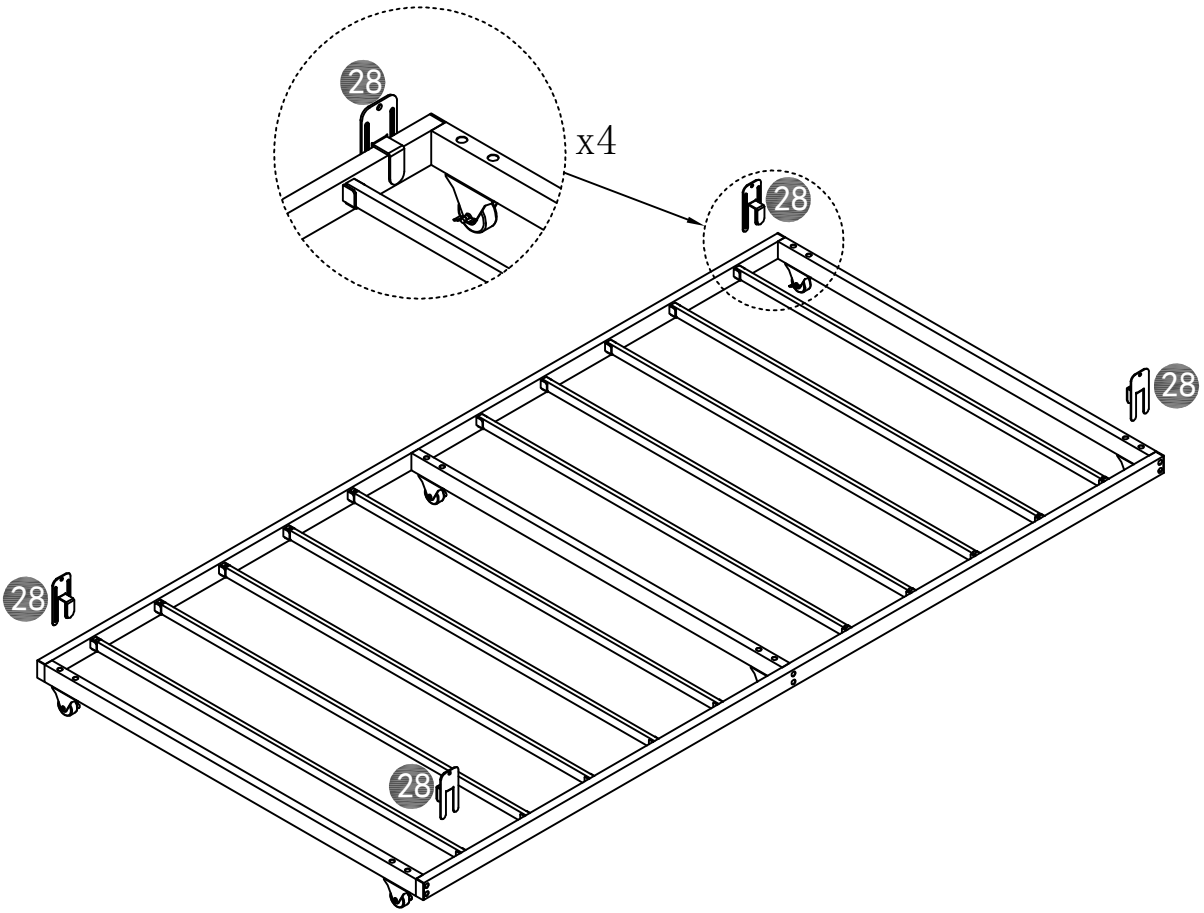

24

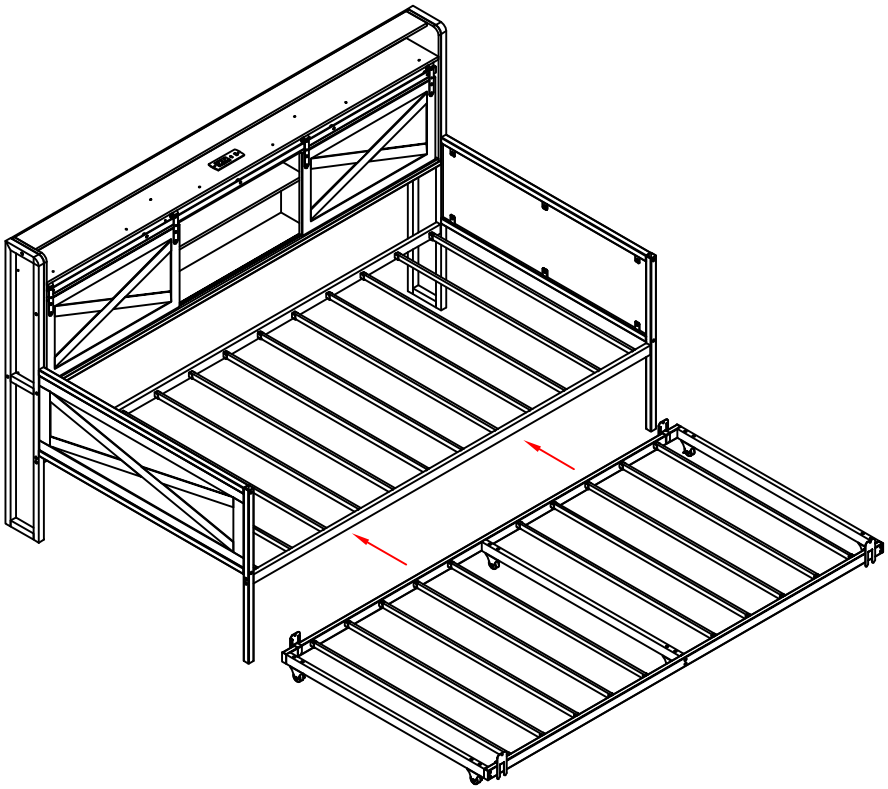

25

