2 Drawer Bedside

35 min

Thank you for choosing this furniture.

PLEASE RETAIN PACKAGING UNTIL YOU HAVE COMPLETED ASSEMBLY.

Information about your furniture.

Our furniture ranges have been carefully crafted from solid wood and natural wood veneers. Each piece of furniture has unique characteristics such as knots, variances and graning. These are part of the natural character of the furniture itself.

Caring for your furniture.

Extreme temperature can cause slight movements in the wood itself so please avoid placing your furniture close to radiators or other direct sources of heat. Humidity should also be avoided. Please avoid exposing your furniture to continued bright sunlight as it can affect the colour. Any fluid should be removed as quickly as possible. Always lift your furniture when moving, as dragging can cause damage to your furniture or flooring. Extreme changes in temperature & humidity during transit may result in a powder residue forming so silica gel bags have been included to alleviate this natural occurrence. This residue is harmless and can easily be removed before assembly with a damp cloth and mild detergent.

After care.

Wipe the surfaces with a dry cloth and an occasional use of normal household polish. We also recommend you use household spray polish occasionally on the drawer grooves and runners as this will aid use. Please do not use detergents or chemicals on your furniture.

Model without skirting board

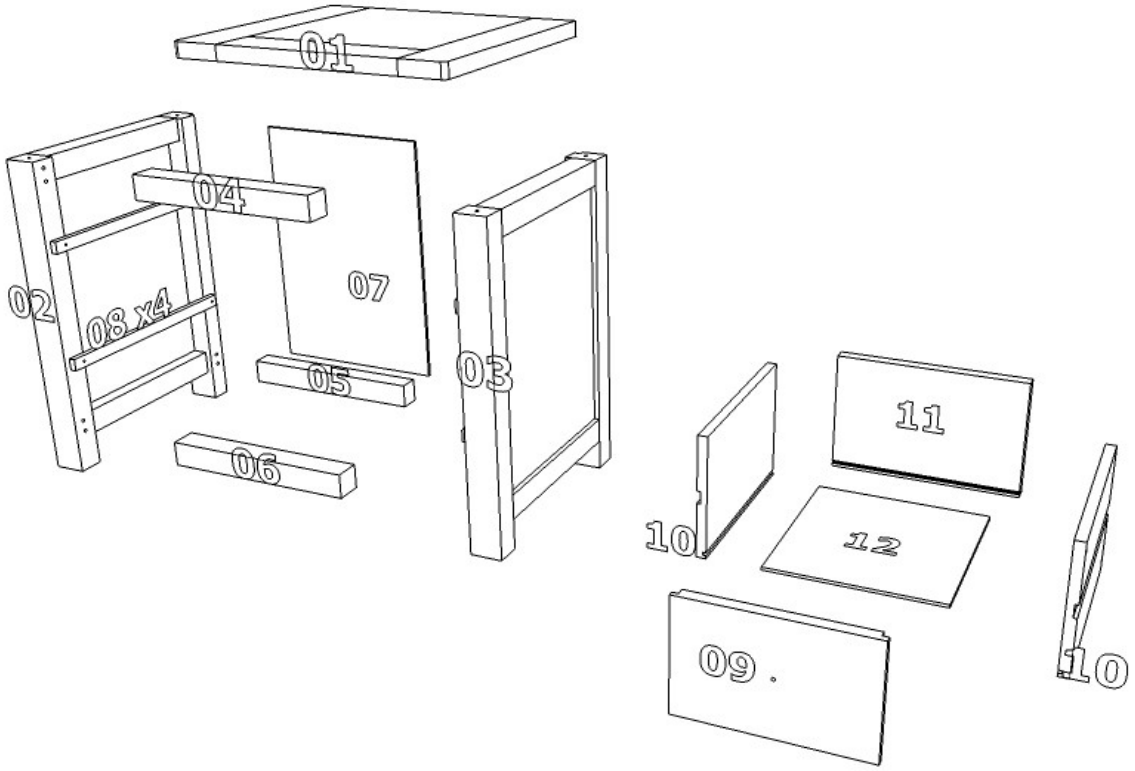

A = x20
Dowel

B = x15
40mm Screw

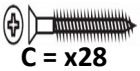

C = x28
25mm Screw

D = x16
Nail

E = x2
Knob

F= x2
Bolt

or

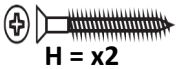

H = x2
35mm screw

Additional parts - only applied to model with skirting board

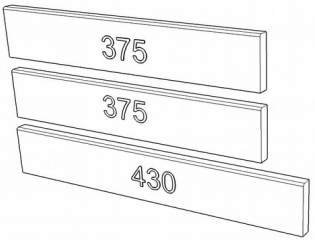

B = x4
40mm Screw

N = x2
60mm Screw

1

B = x4
40mm Screw

C = x4
25mm Screw

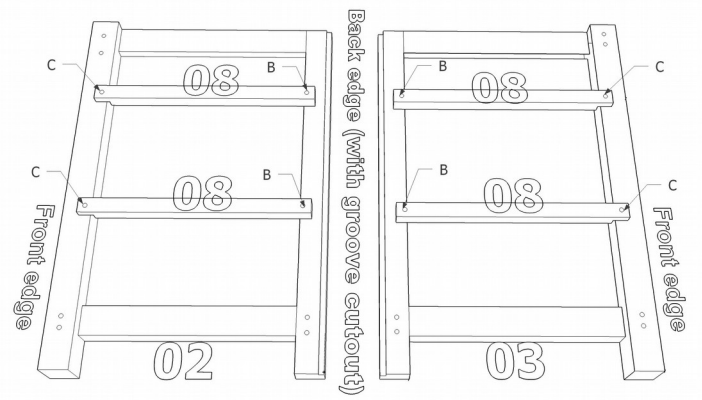

2

A = x16
Dowel

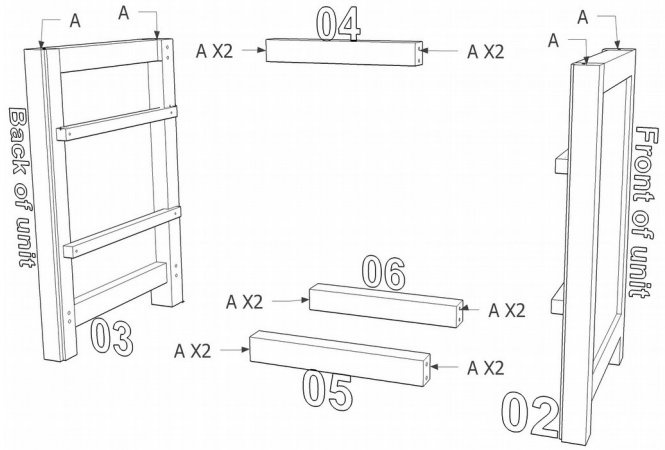

3

B = x6
40mm Screw

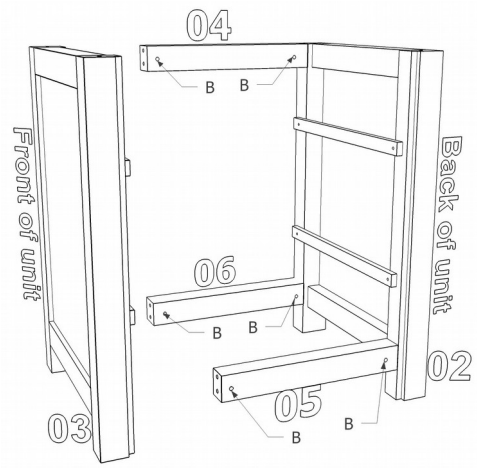

4

B = x5
40mm Screw

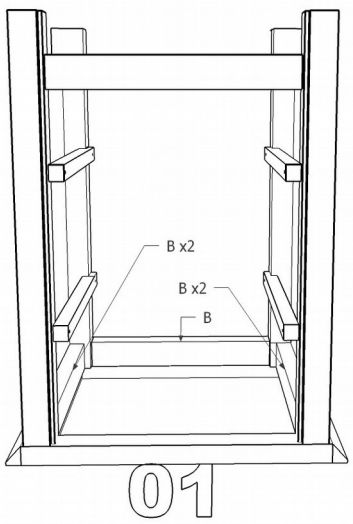

5

D = x16
Nail

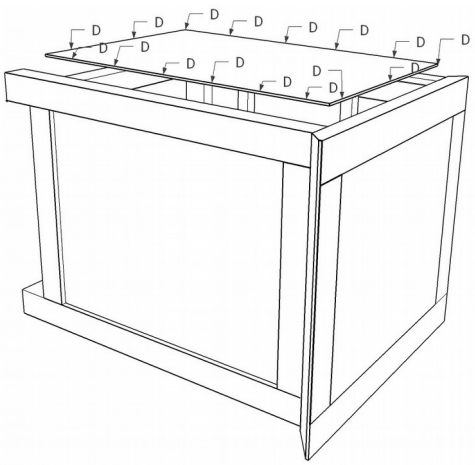

6

C = x24
25mm Screw

E = x2
Knob

F= x2
Bolt

or

H = x2
35mm screw

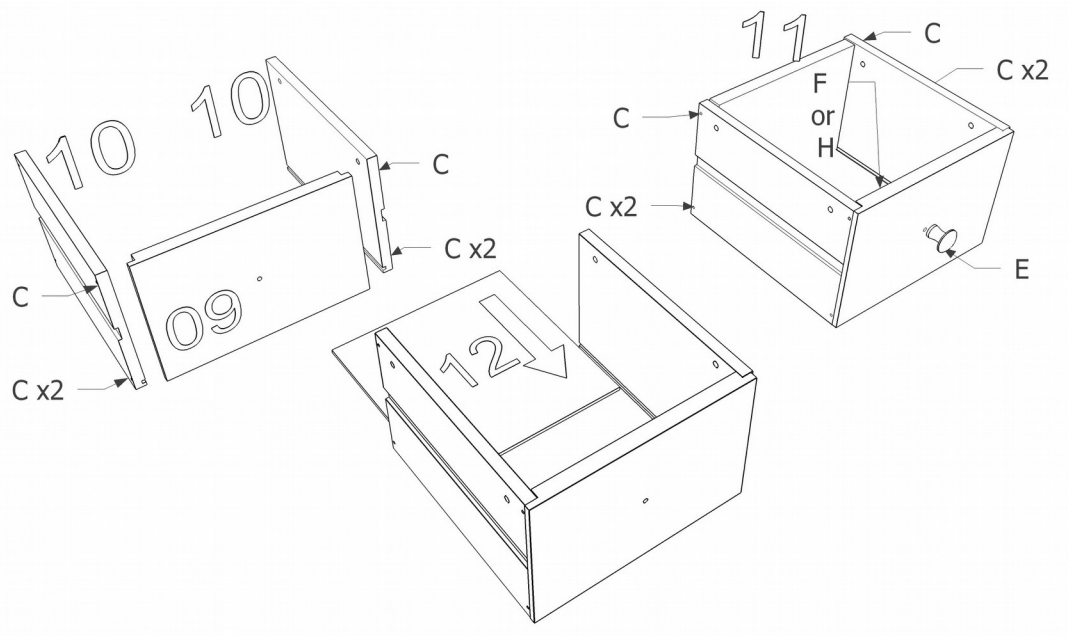

7

Tip: insert dowels from the inside of the drawers, pushing through so they sit level with the inside of the drawer side.
Repeat for all drawers

A = x4
Dowel

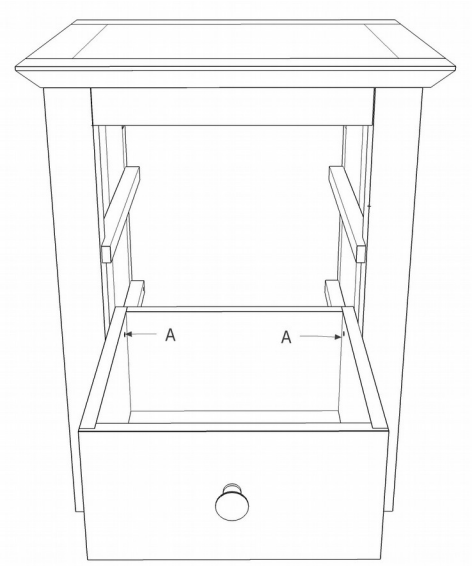

Extra step only applicable for model with a skirting board

7

B = x4
40mm Screw
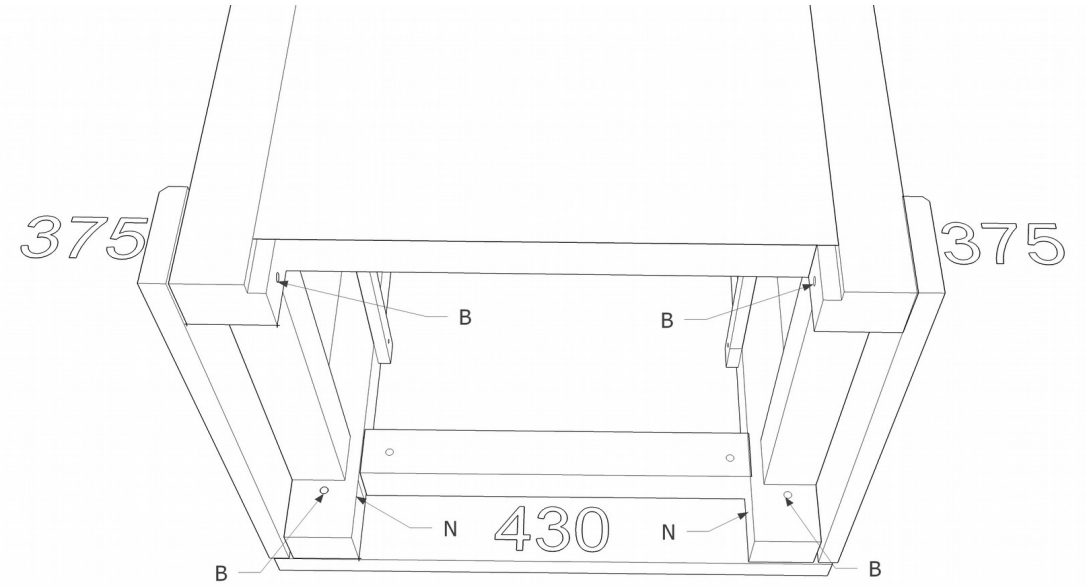
N = x2
60mm Screw