Assembly Instruction

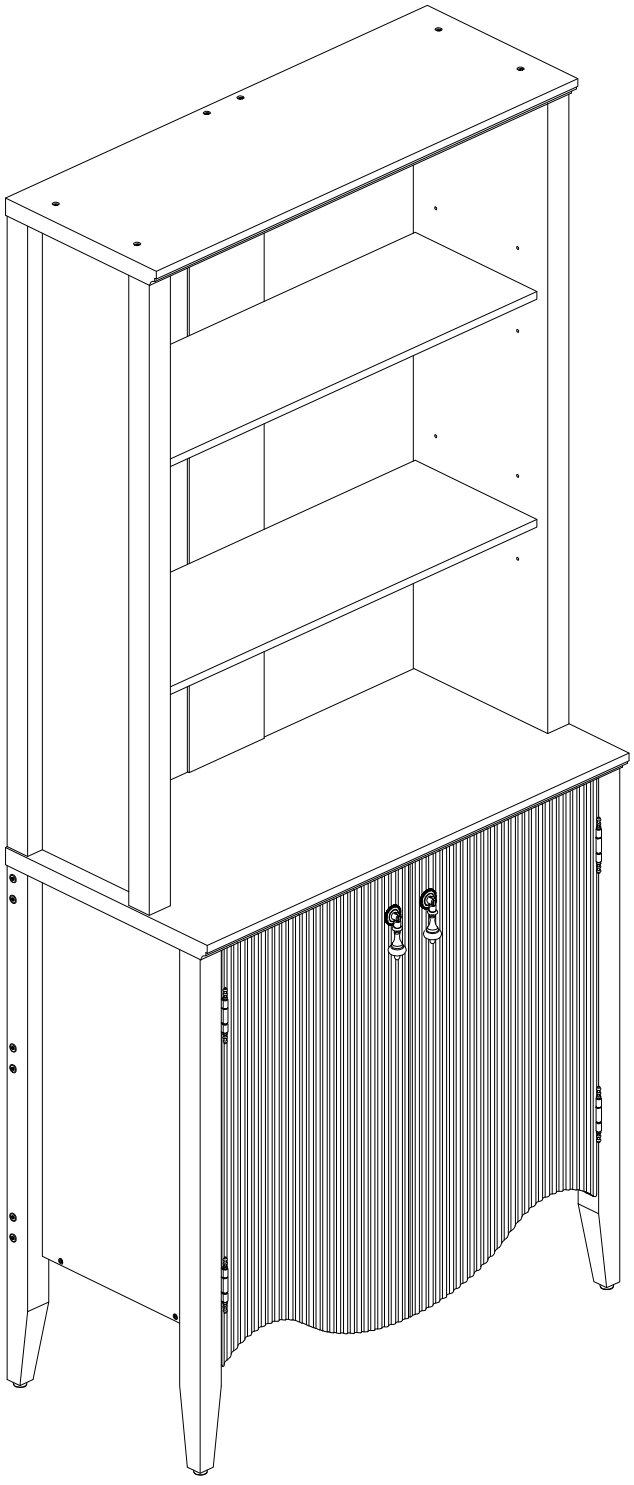

MADE IN CHINA

Thank you for purchasing our quality product.

Before Beginning & Caution

- Please take the time to read instructions ,cover to cover.
- Unpack ,inspect and check all bags and components to ensure you have all parts.
- We strongly recommend that you keep children away from the work area to avoid swallowing by mistake due to playing.
- Do not assemble on flooring or carpet, assemble on a clean and non-abrasive surface.
- Save all packing materials until assembly is completed.
- Please dispose of plastic bags safely.
- If you keep the hardware in a bowl or a special area during assembly,you will be less likely to lose them.
- Do not use products unless all screws are tight.

Care & Maintenance

- Dust and pick up spills using a clean ,non-colored ,lint-free cloth.
- Stains may be removed with damp cloth.
- Keep away sharp and chemical stuff from product to avoid serious damaging.

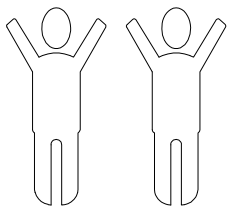
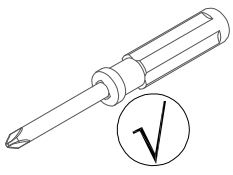
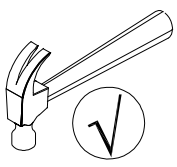
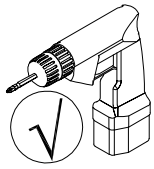

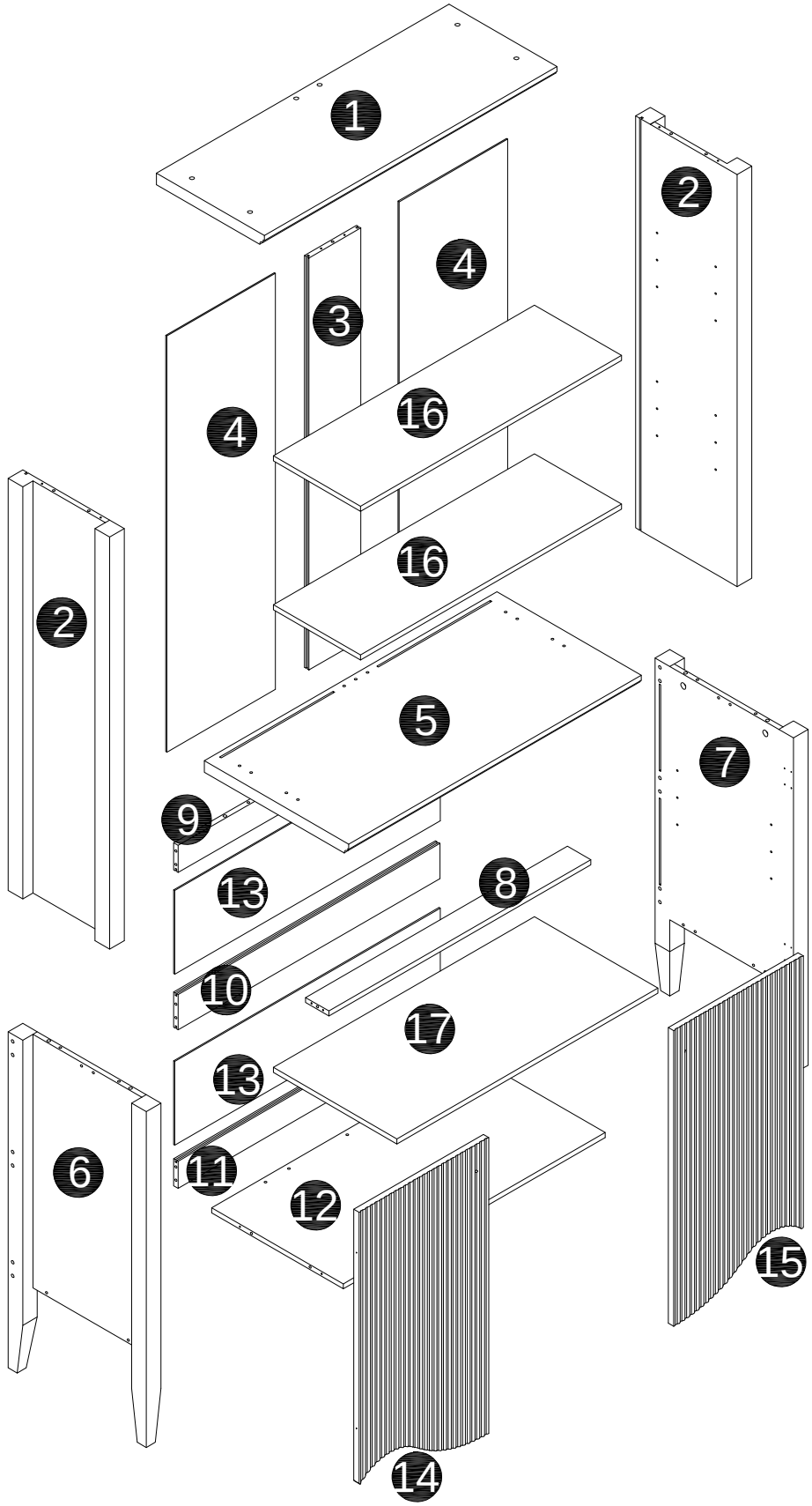
1
2
4
3
4
16
2
16
5
7
9
13
8
10
17
13
6
11
12
15
14

PARTS LIST

1 x1 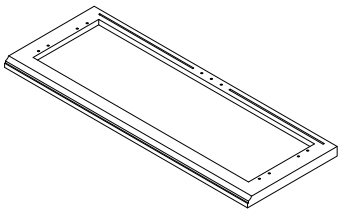	2 x2 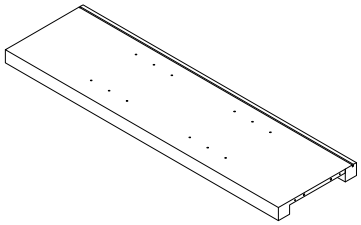	3 x1 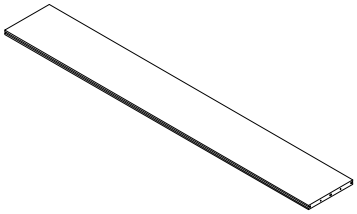	4 x2 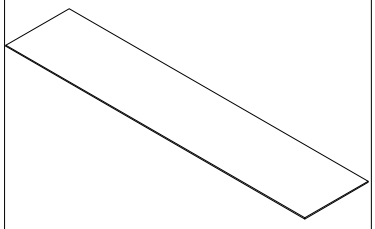
5 x1 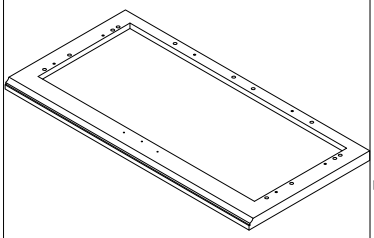	6 x1 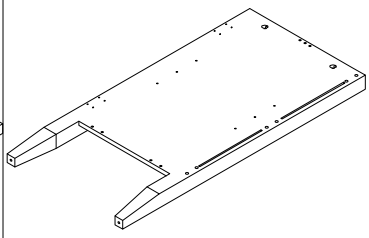	7 x1 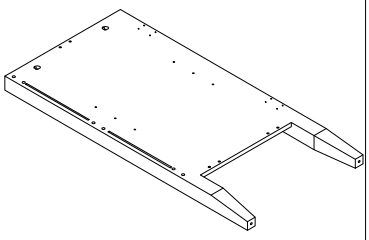	8 x1 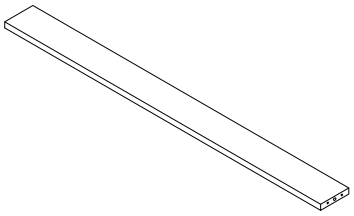
9 x1 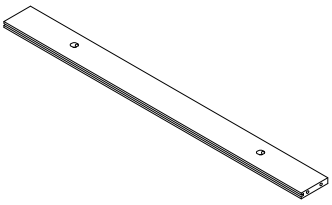	10 x1 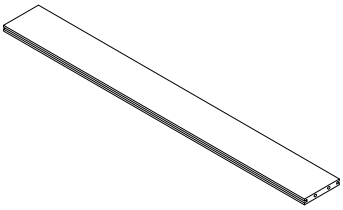	11 x1 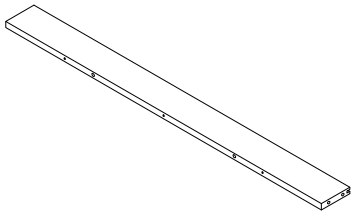	12 x1 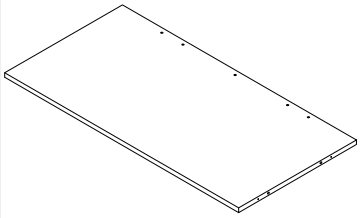
13 x2 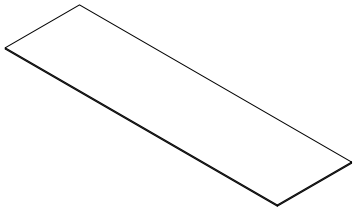	14 x1 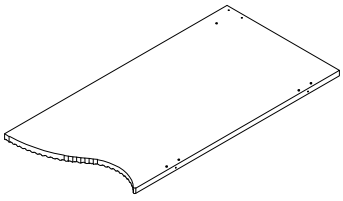	15 x1 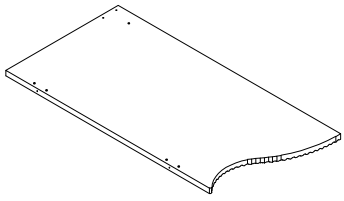	16 x2 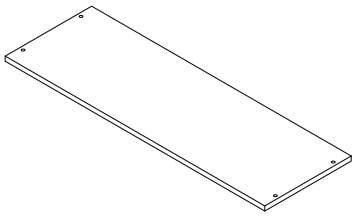
17 x1 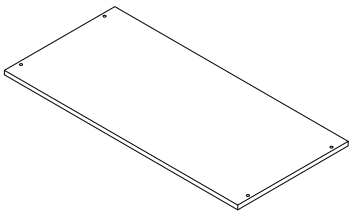			

HARDWARE LIST



M4
A×1PC

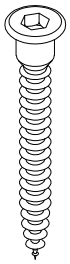

M5X45mm
B×23PCS



Ø6*30mm
C×24PCS



M7*70mm
D×12 PCS



E×4PCS



Ø6.5x36mm
F1×6PCS

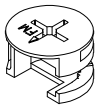

Ø15x9.8mm
F2×6PCS

F

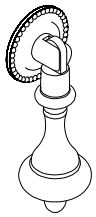

G1×2PCS



M4*20mm
G2×2PCS

G

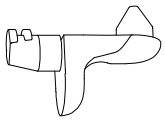

H×12PCS



14*14*11mm
I×12PCS



Ø6*M3*16mm
J×15PCS



Ø7*M3.5*12mm
K×34 PCS

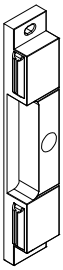

L1×1PC



L2×2PCS

L

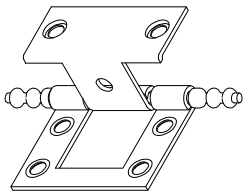

M×4PCS



Ø6x25mm

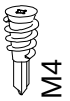

M4



Ø8xM4x25mm

R1x2PCS R2x2PCS R3x2PCS

R



28x28x18mm



26x26x13.5mm

S1x2PCS S2x2PCS

S

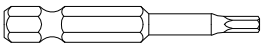

For power tools

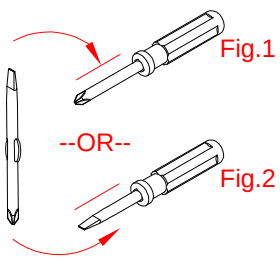

STEP 1

M5X45mm B×2PCS


C×2PCS


A

1 x1pc

2 x1pc

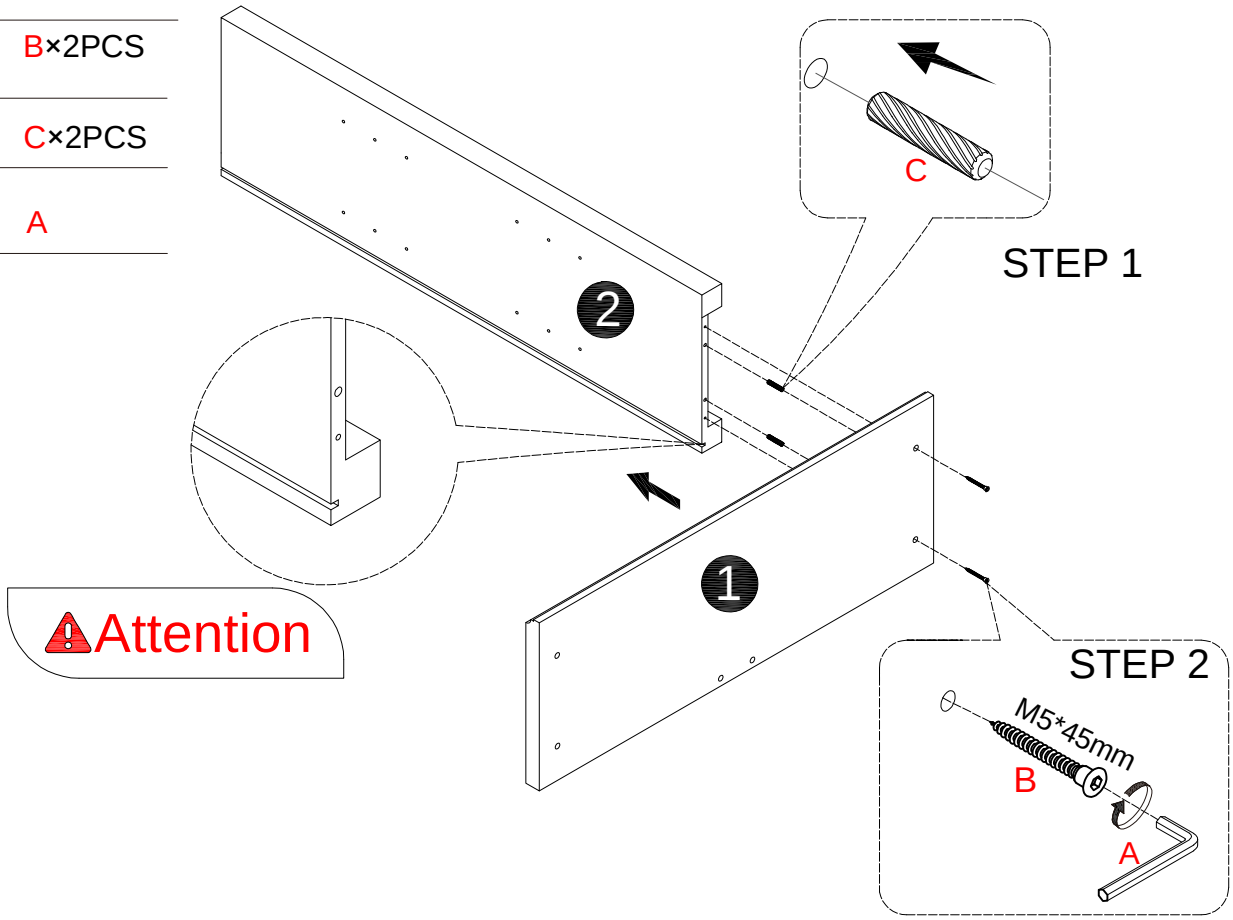

STEP 2

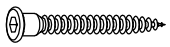
M5X45mm B×2PCS


C×1PC


A

3 x1pc

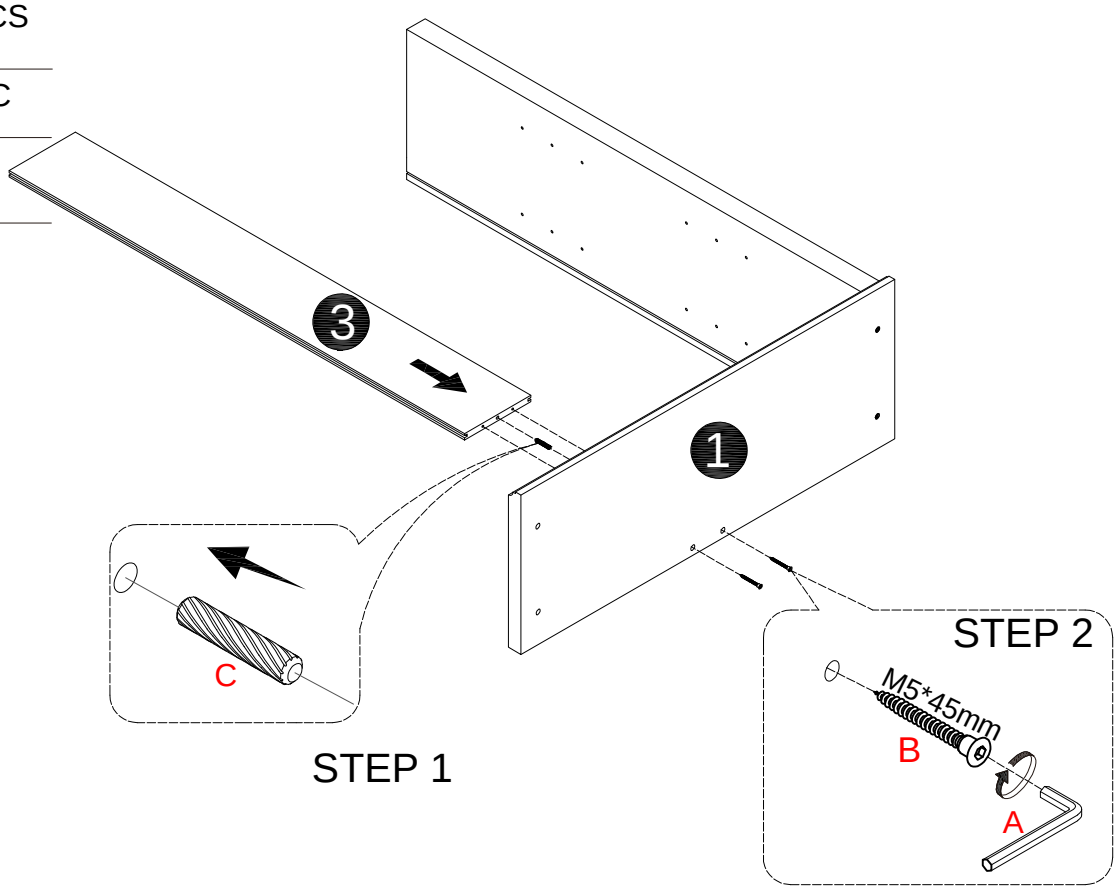

STEP 3

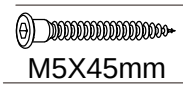

B×2PCS

M5X45mm



C×2PCS



A

2 x1pc

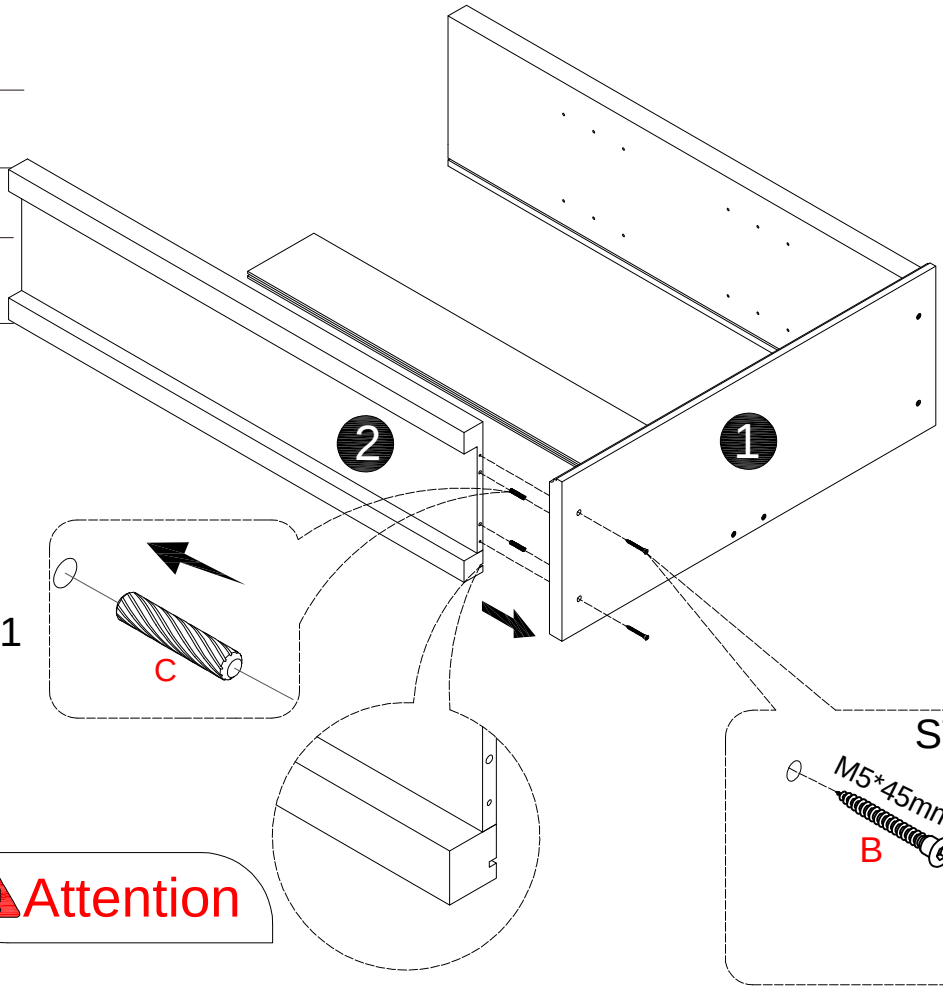

STEP 4

4 x2pcs

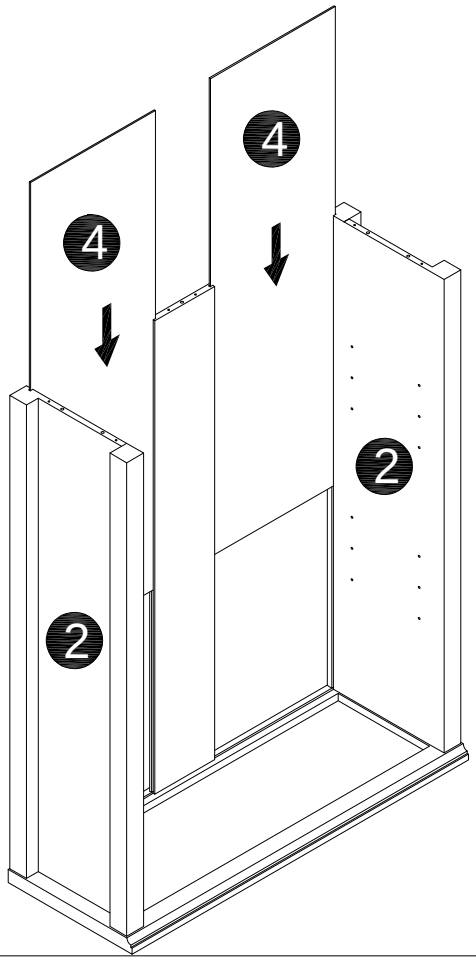

STEP 5

C×5PCS

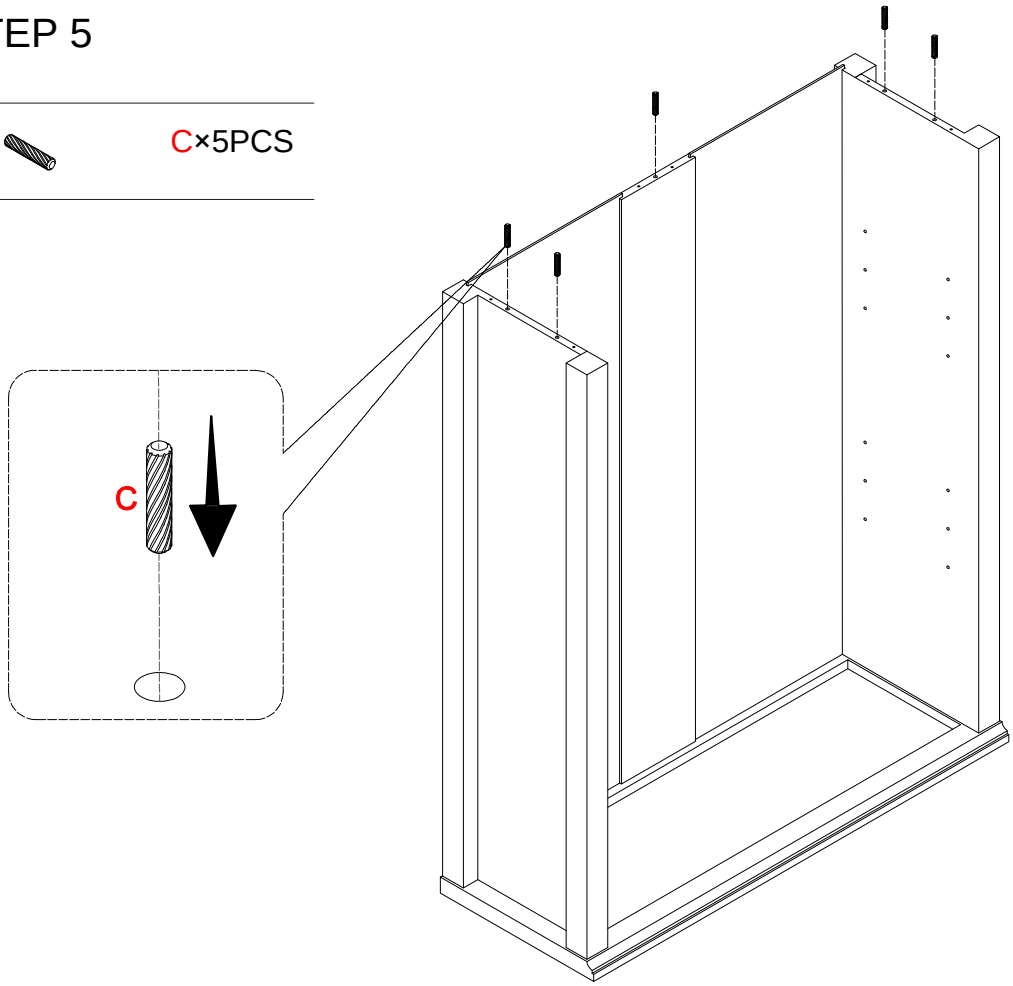

STEP 6

B×6PCS

M5X45mm

A

5 x1pc

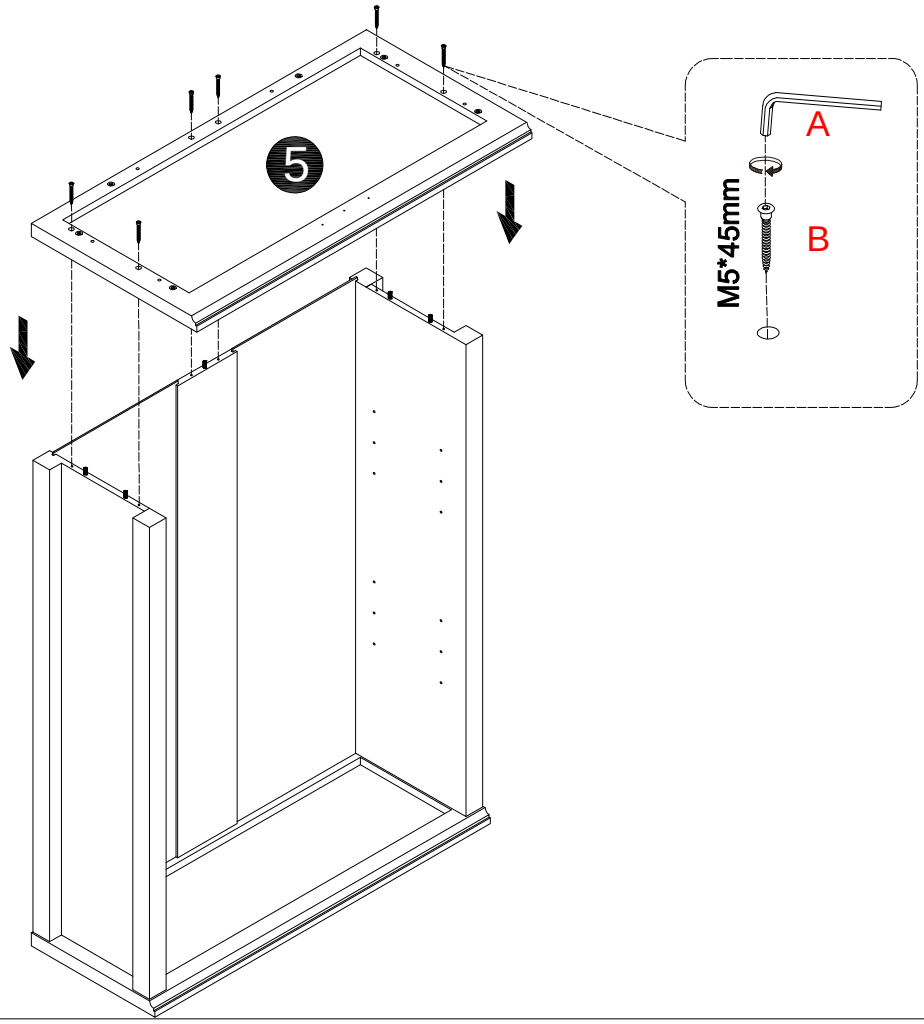

STEP 7

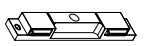
L1×1PC


J×3PCS

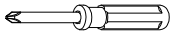

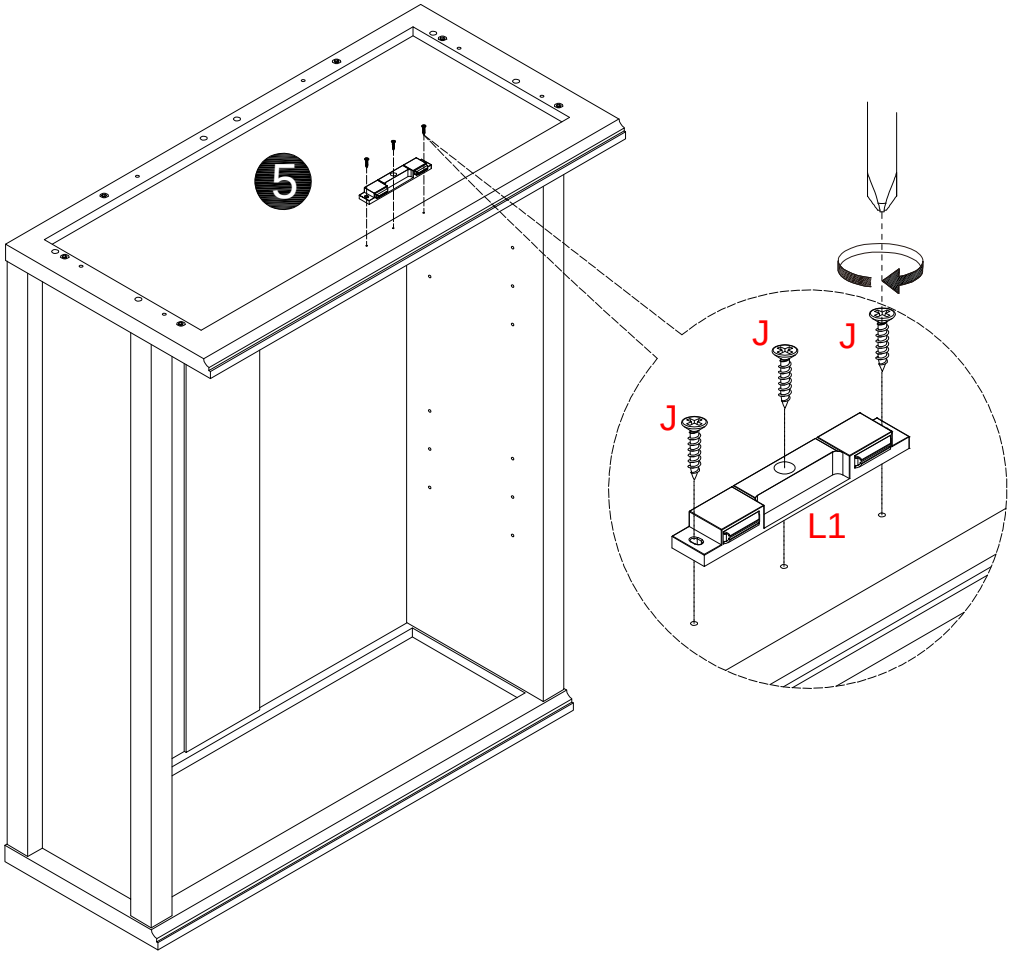

STEP 8

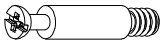
F1×6PCS

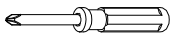

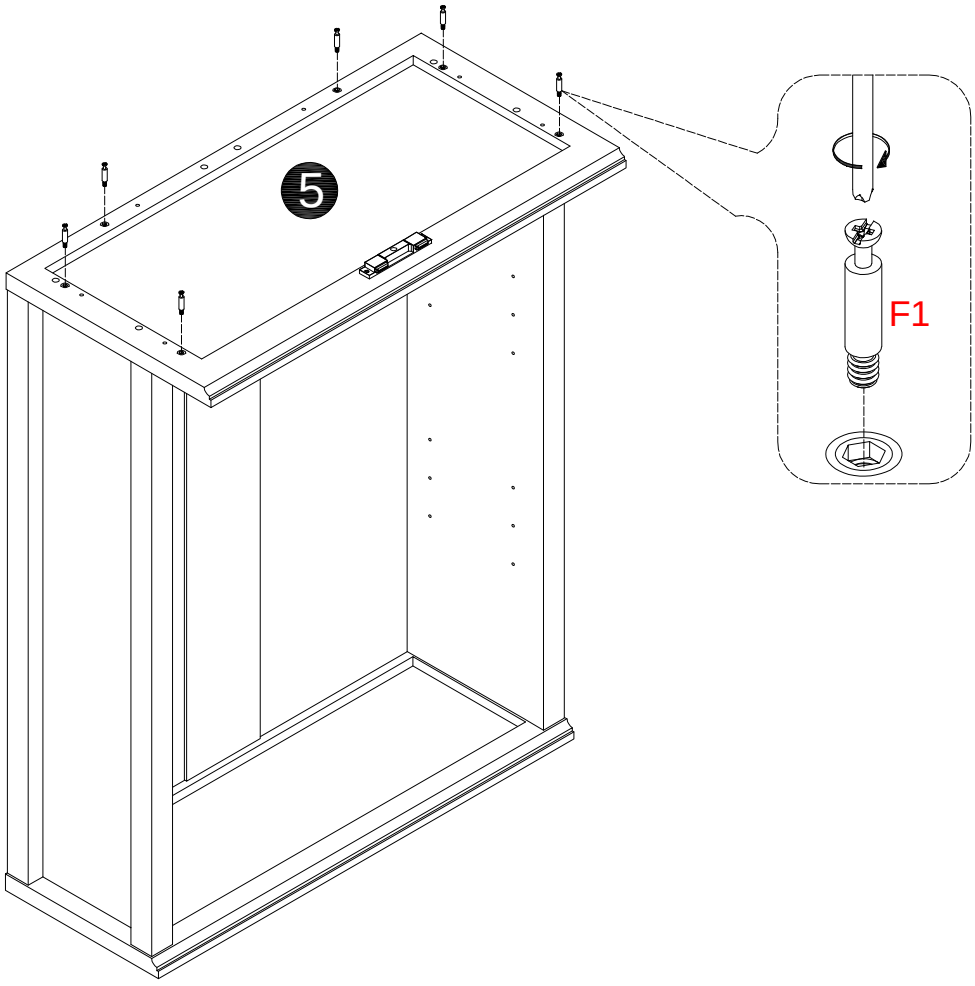

STEP 9



B×3PCS
M5X45mm



C×2PCS



A

11 x1pc

12 x1pc

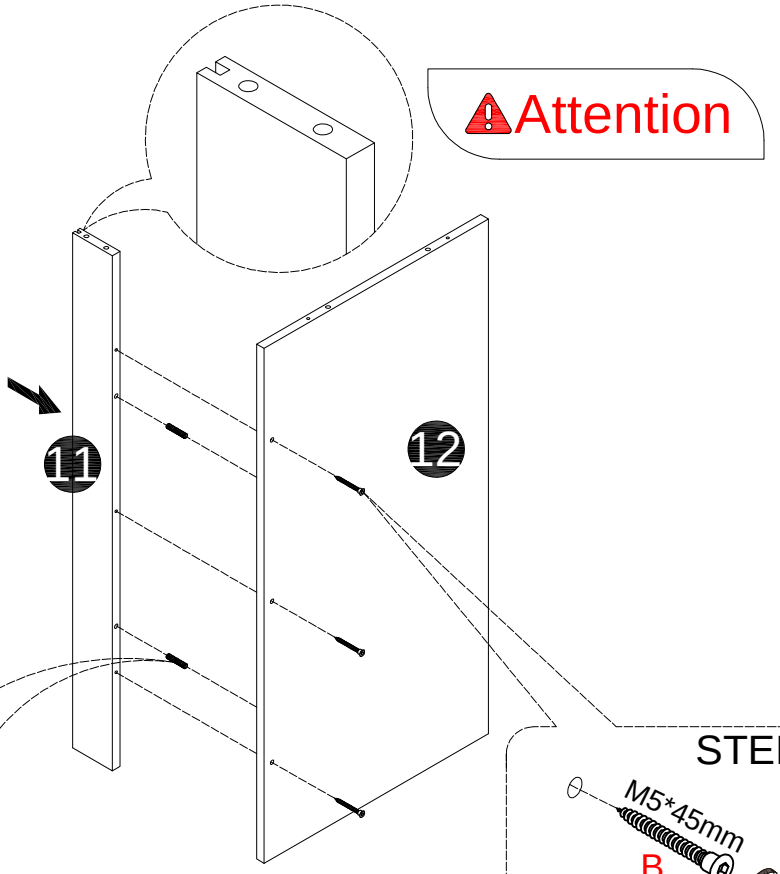

STEP 10

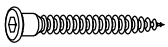

B×4PCS
M5X45mm



C×3PCS



A

6 x1pc

8 x1pc

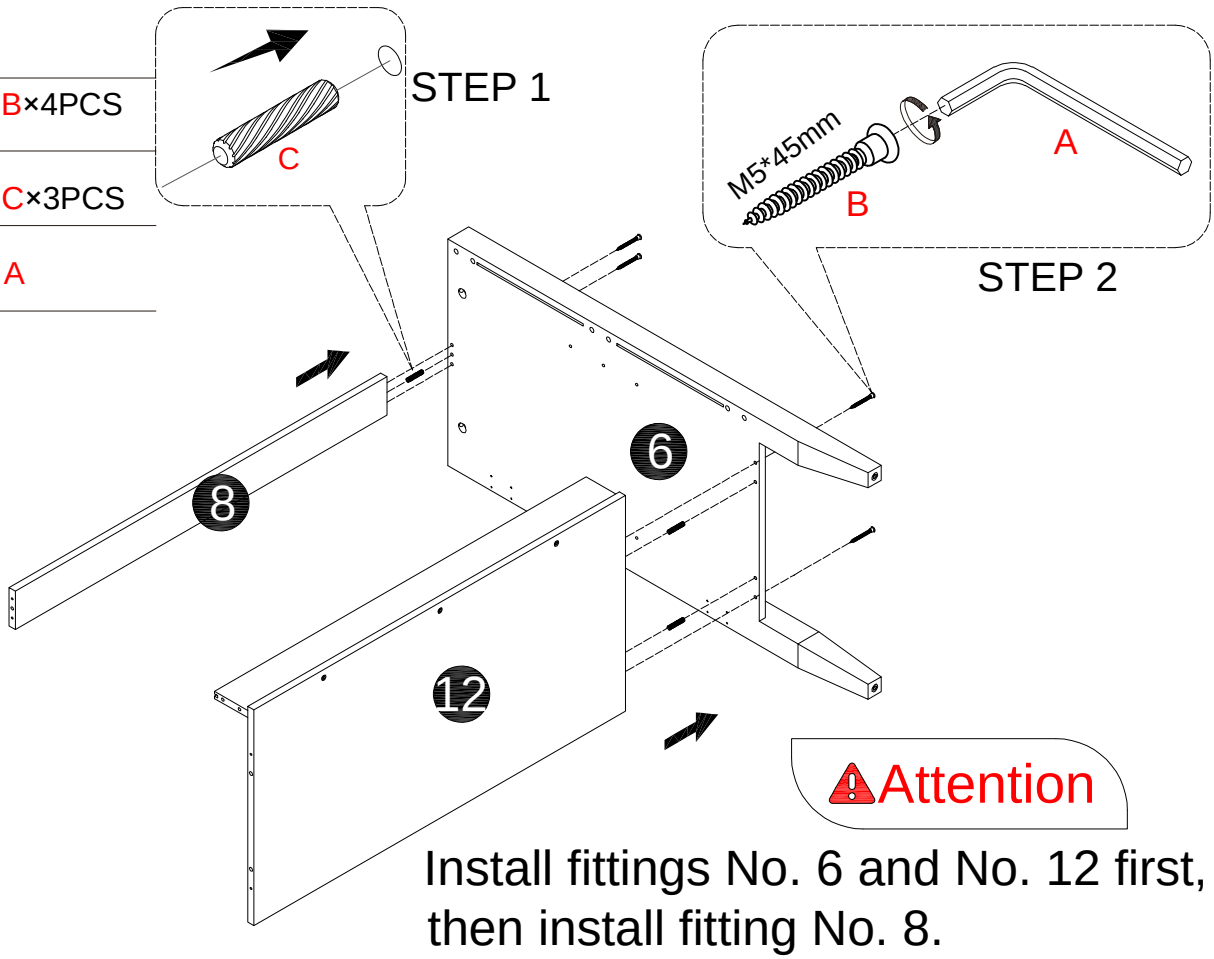

Install fittings No. 6 and No. 12 first, then install fitting No. 8.

STEP 11



M7*70mm D×6PCS



A

9 x1pc

10 x1pc

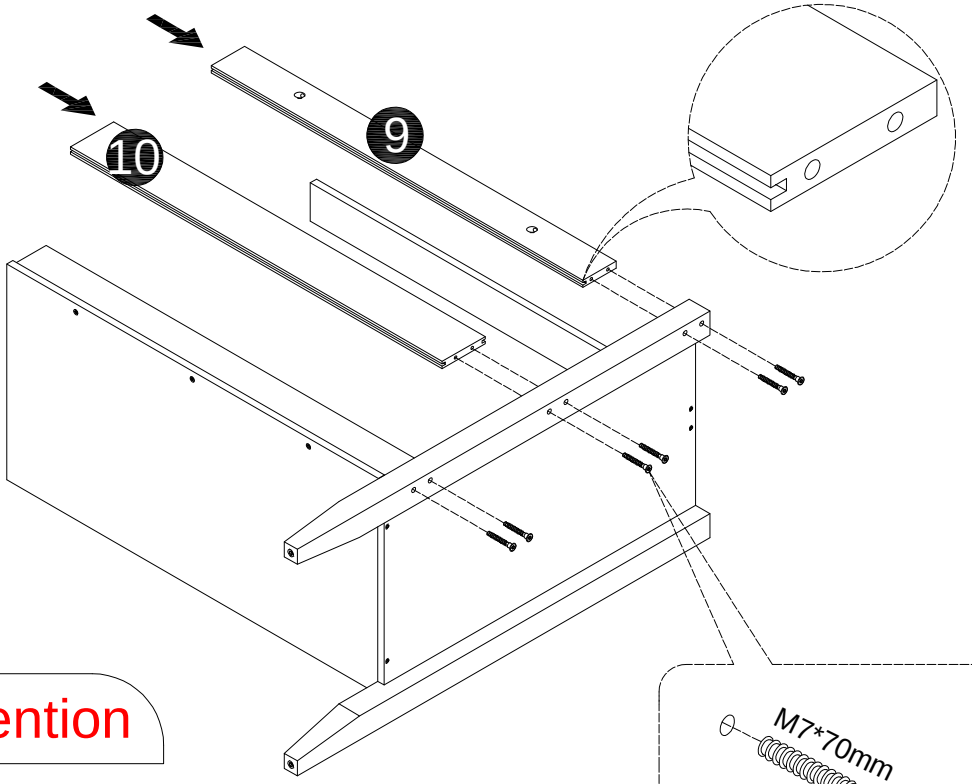

Attention

Pay attention to the correct use of screws.

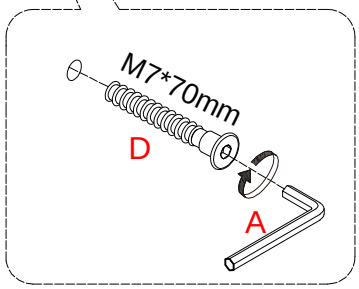

STEP 12

13 x2pcs

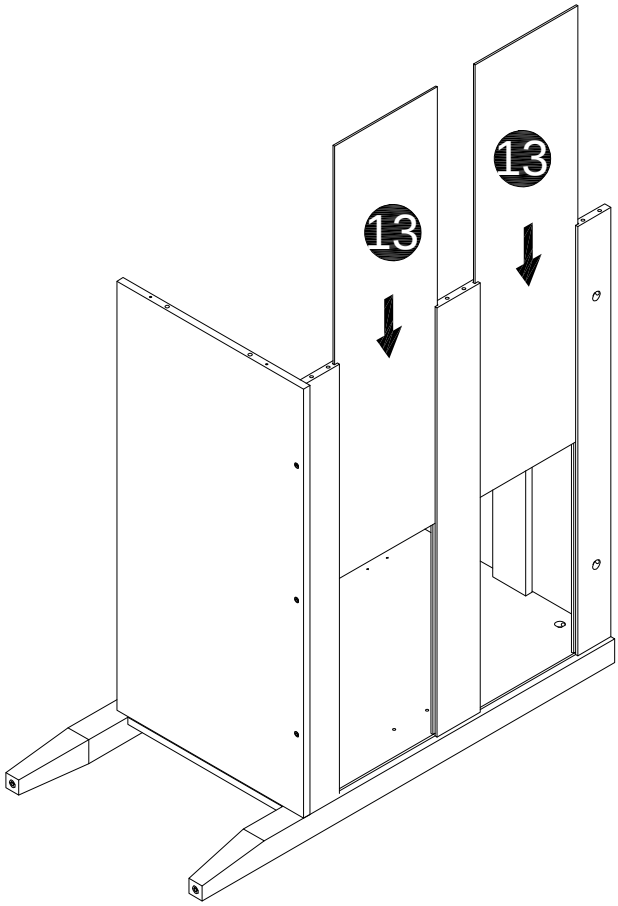

STEP 13

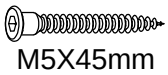
M5X45mm B×4PCS


C×3PCS


A

7 x1pc

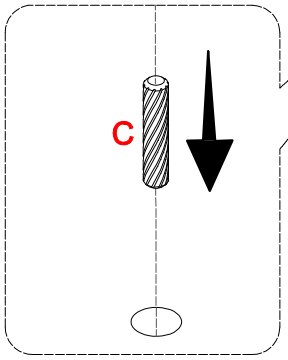

STEP 1

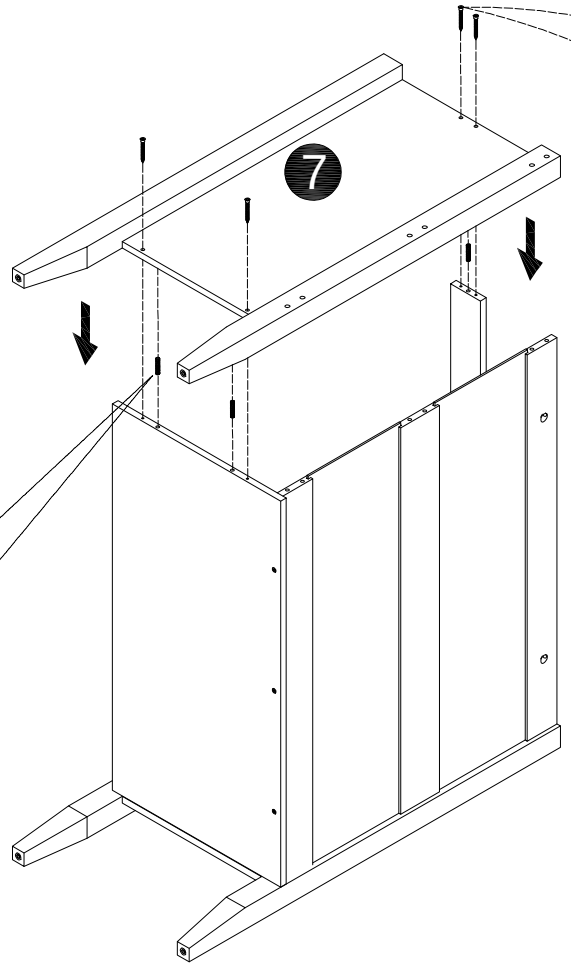

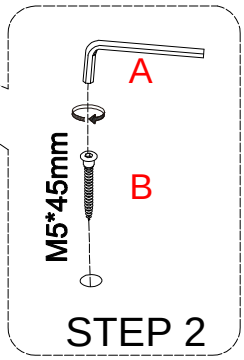

STEP 2

Attention

Pay attention to the correct use of screws.

STEP 14


M7*70mm D×6PCS


A

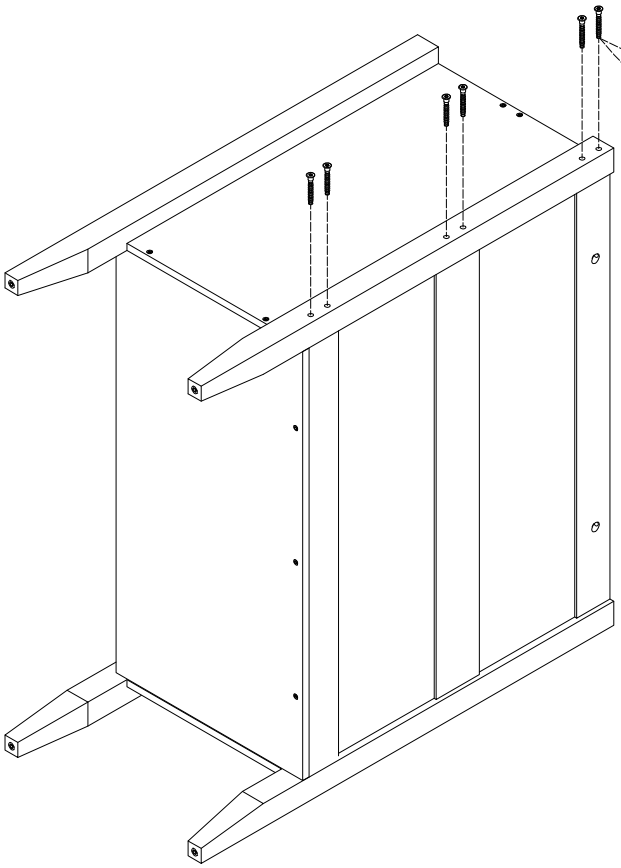

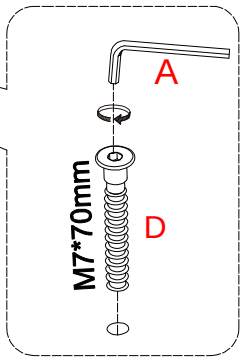

Attention

Pay attention to the correct use of screws.

STEP 15

E×4PCS

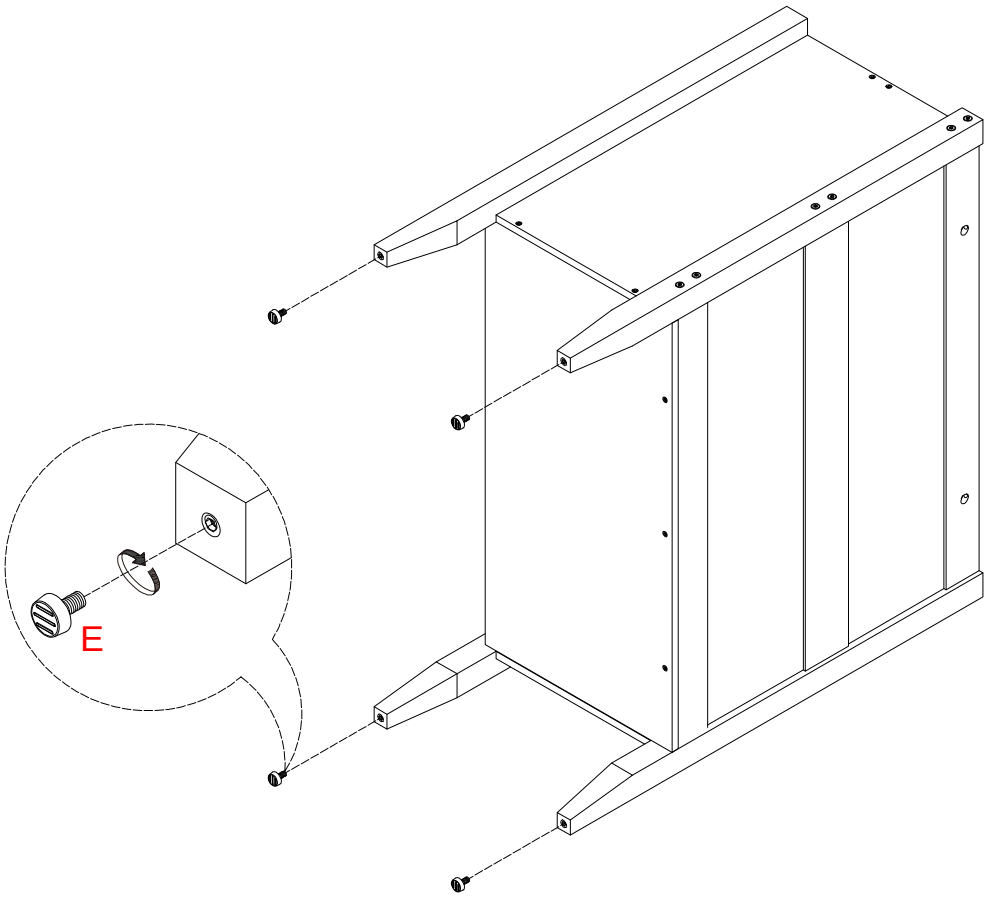

STEP 16


F2×4PCS


C×6PCS

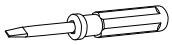

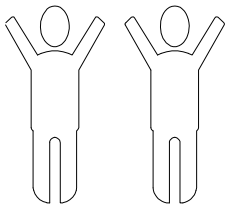
Two-person assembly

STEP 1

STEP 17



F2×2PCS

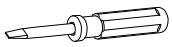

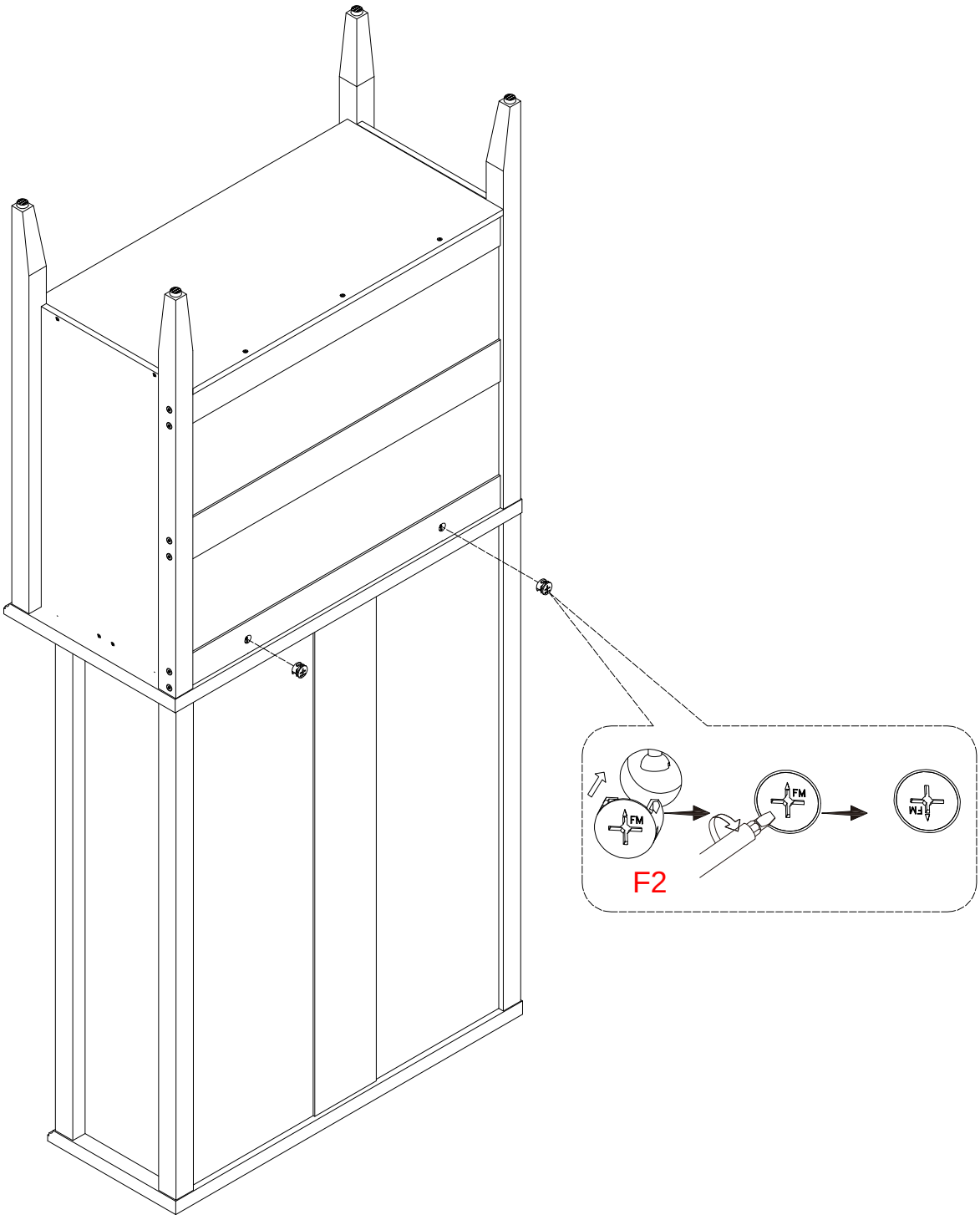

STEP 18



H×12PCS

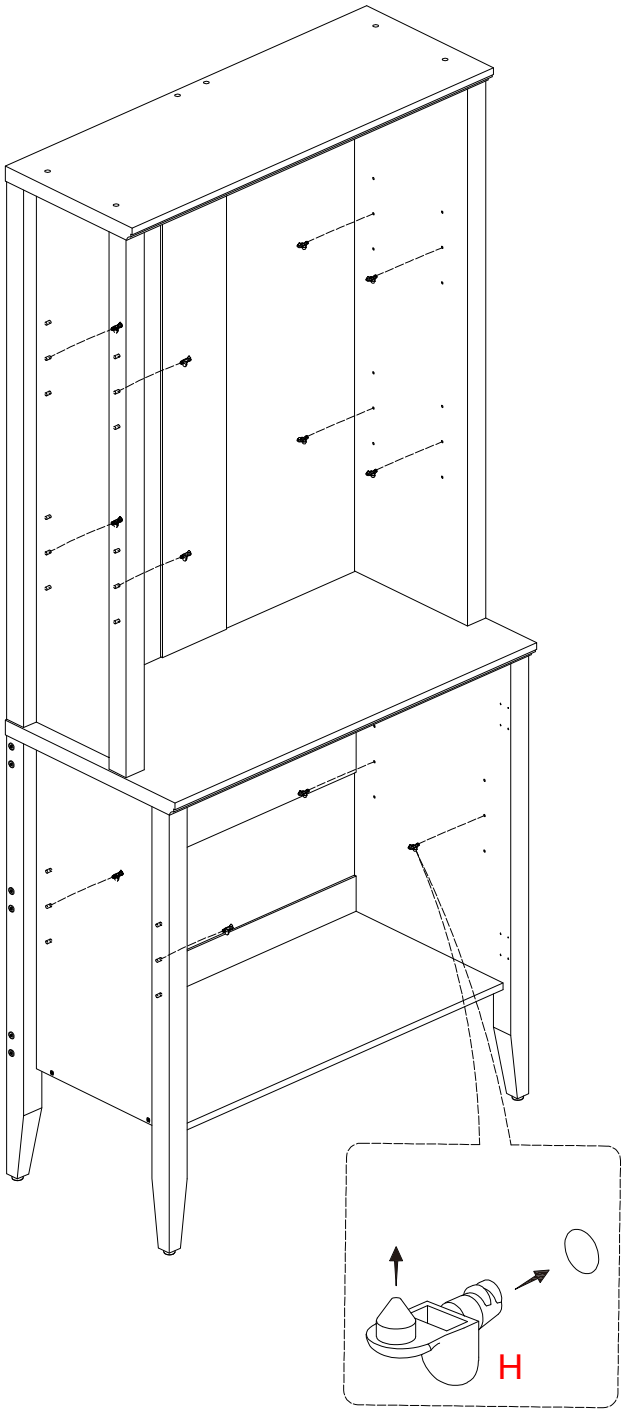

STEP 19

16 x2pcs

17 x1pc

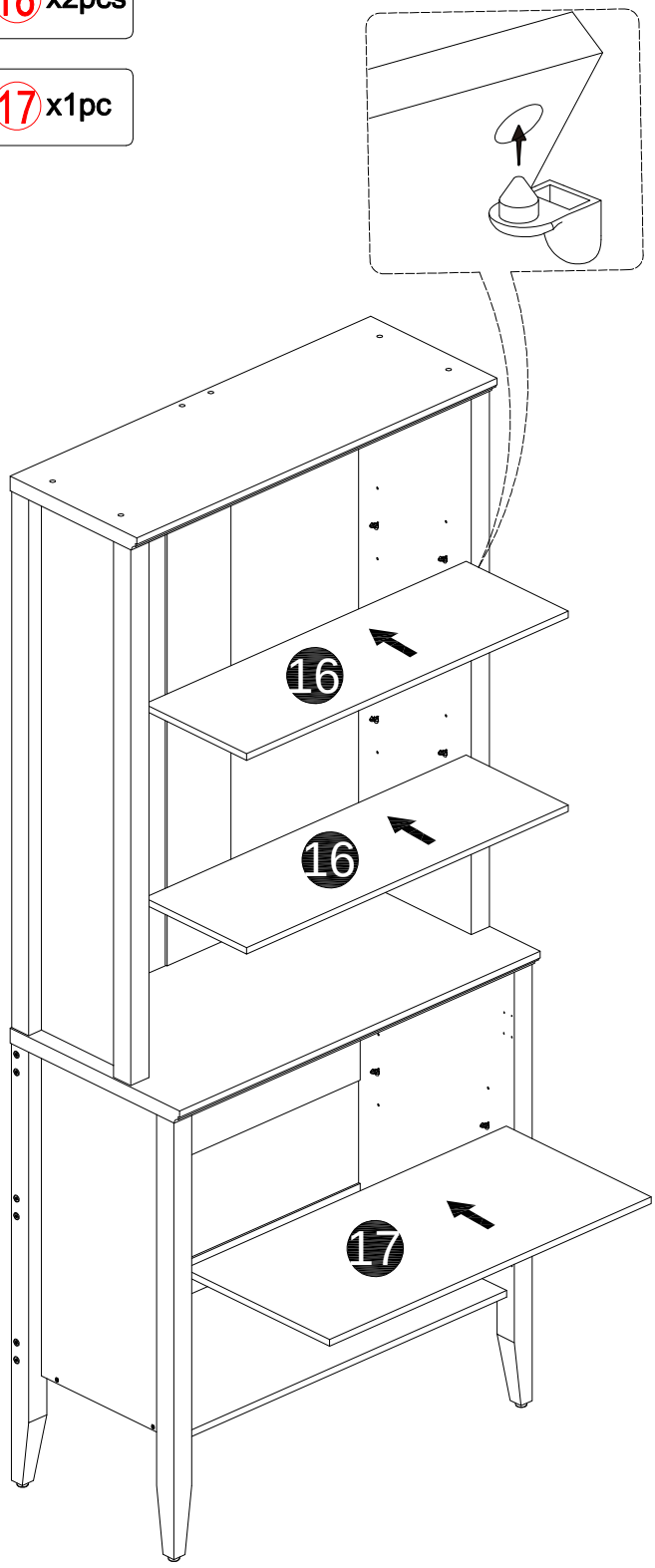

STEP 20


K×12PCS


M×4PCS

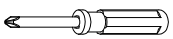

14 x1pc

15 x1pc

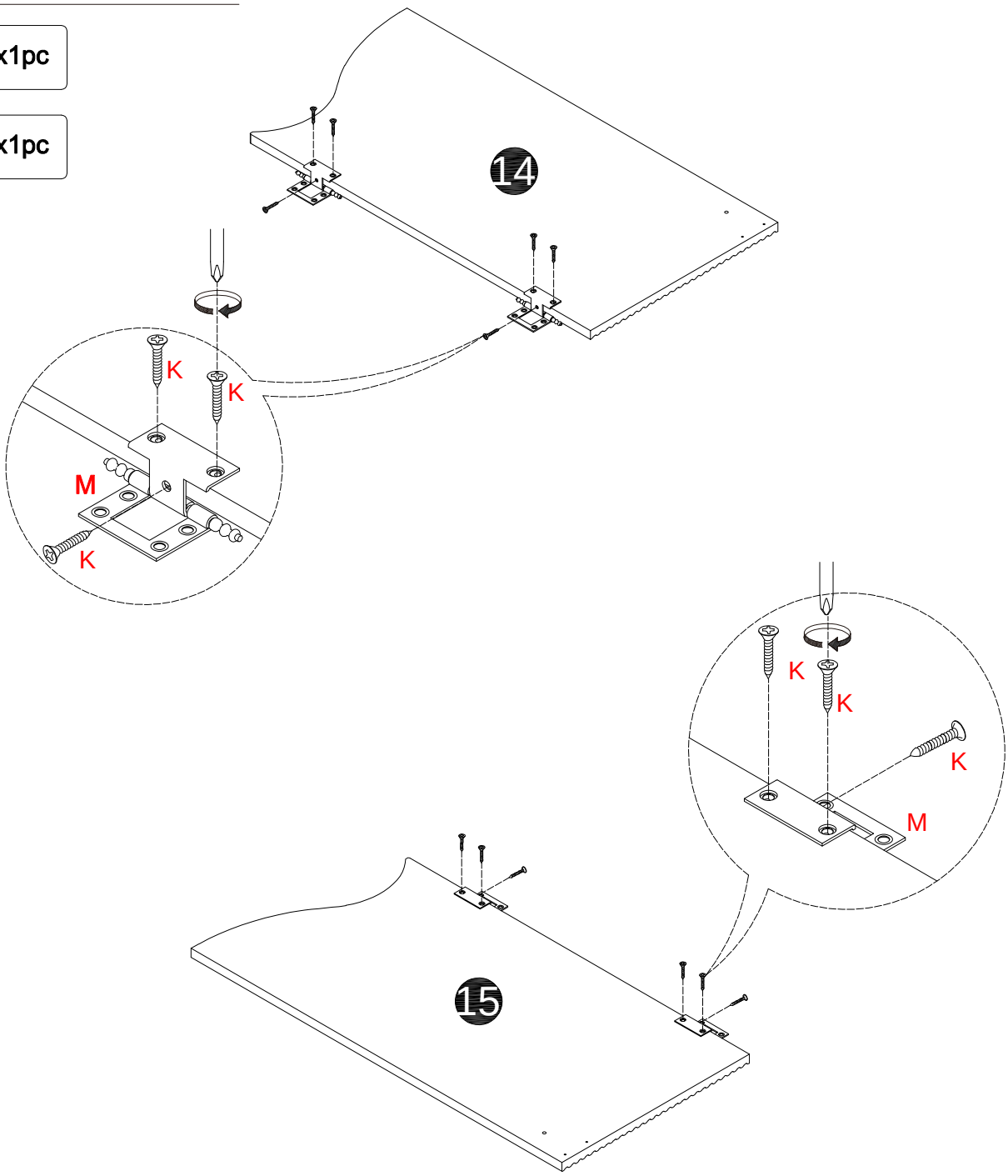

STEP 21



K×8PCS

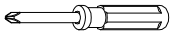

15 x1pc

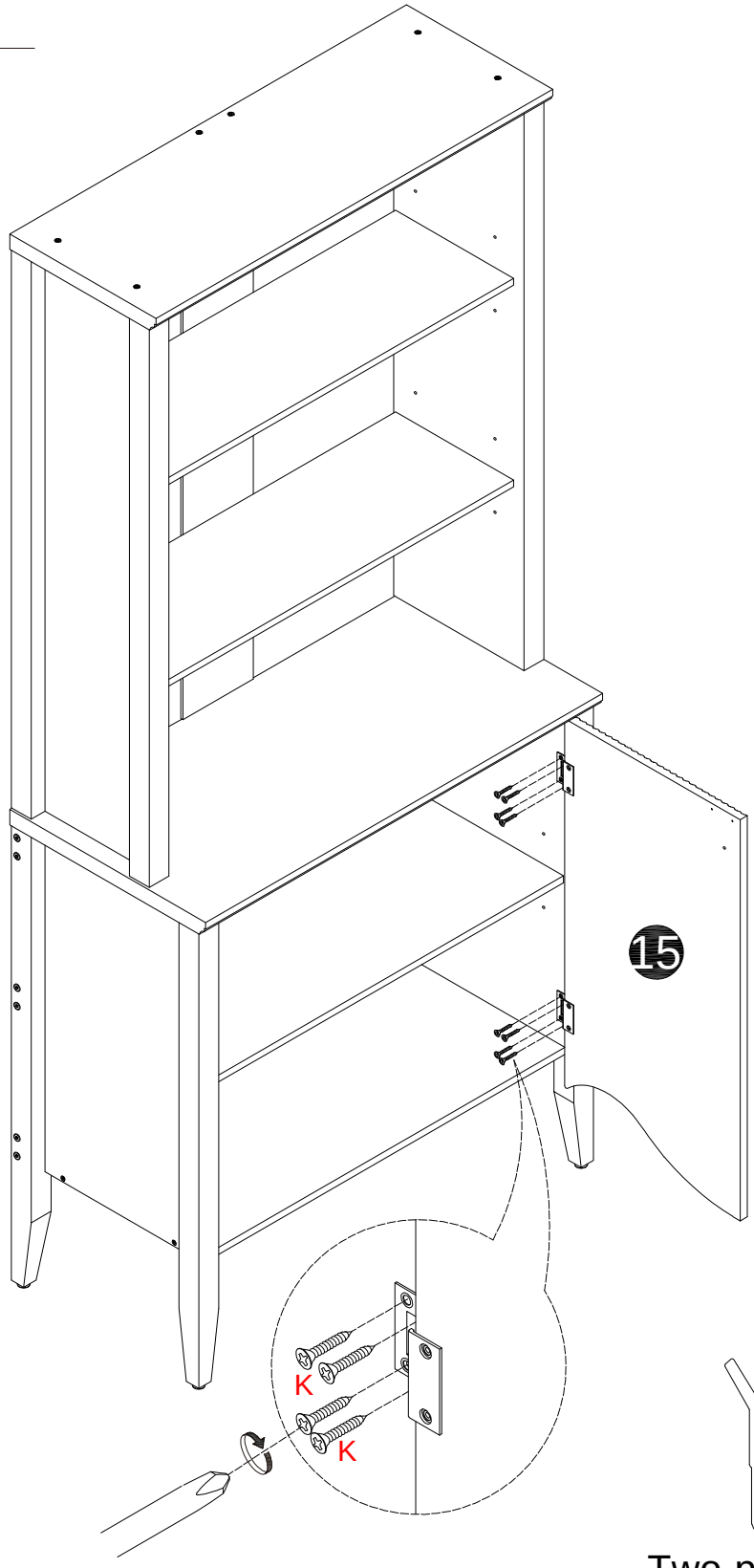

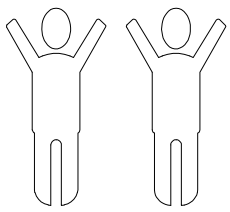

Two-person assembly

STEP 22


L2×1PC


K×2PCS

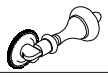
G1×1PC


G2×1PC

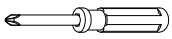

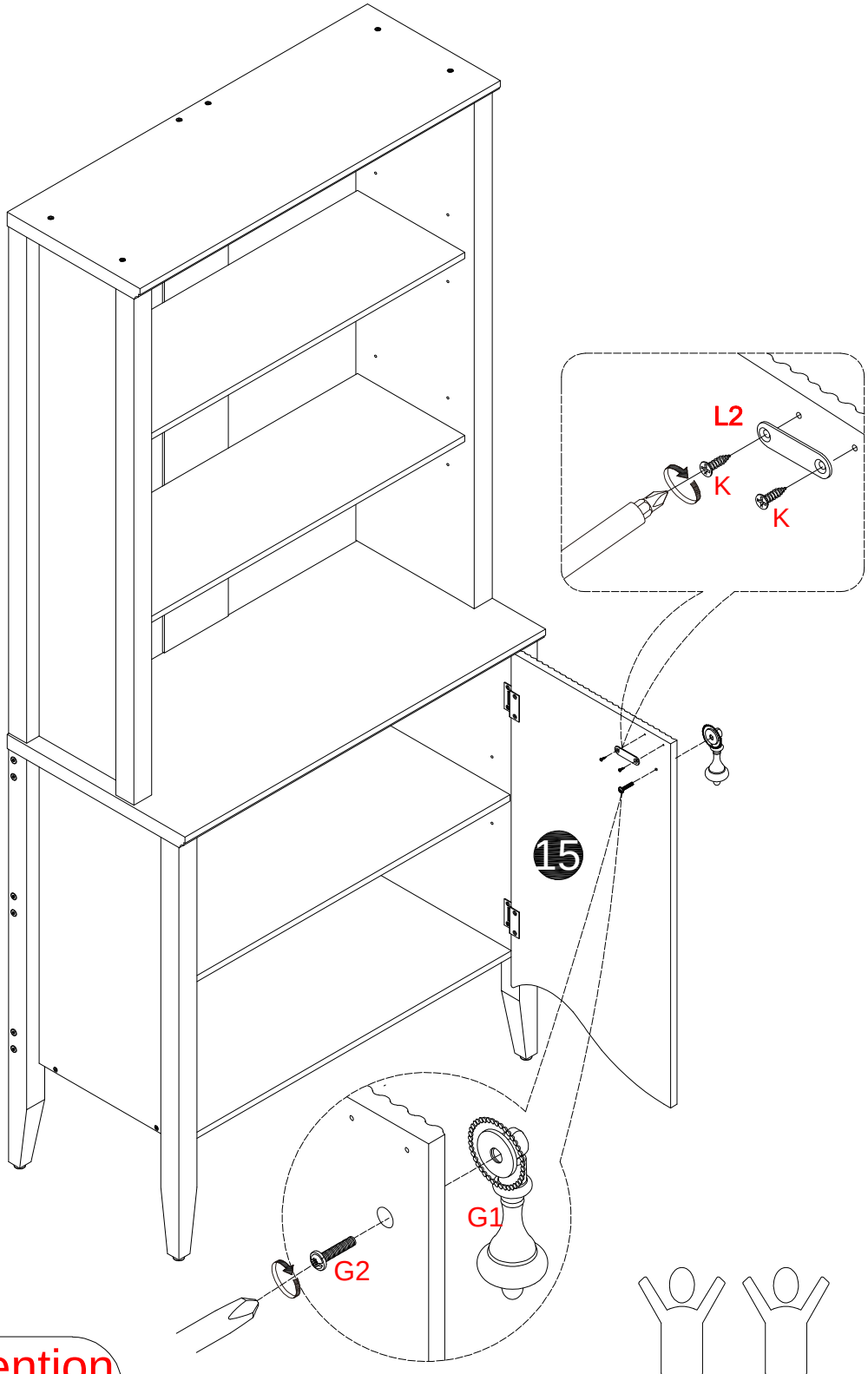

Attention

Align the handle properly before tightening the screws. Do not rotate the handle during installation.

Two-person assembly

STEP 23



K×8PCS

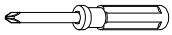

14 x1pc

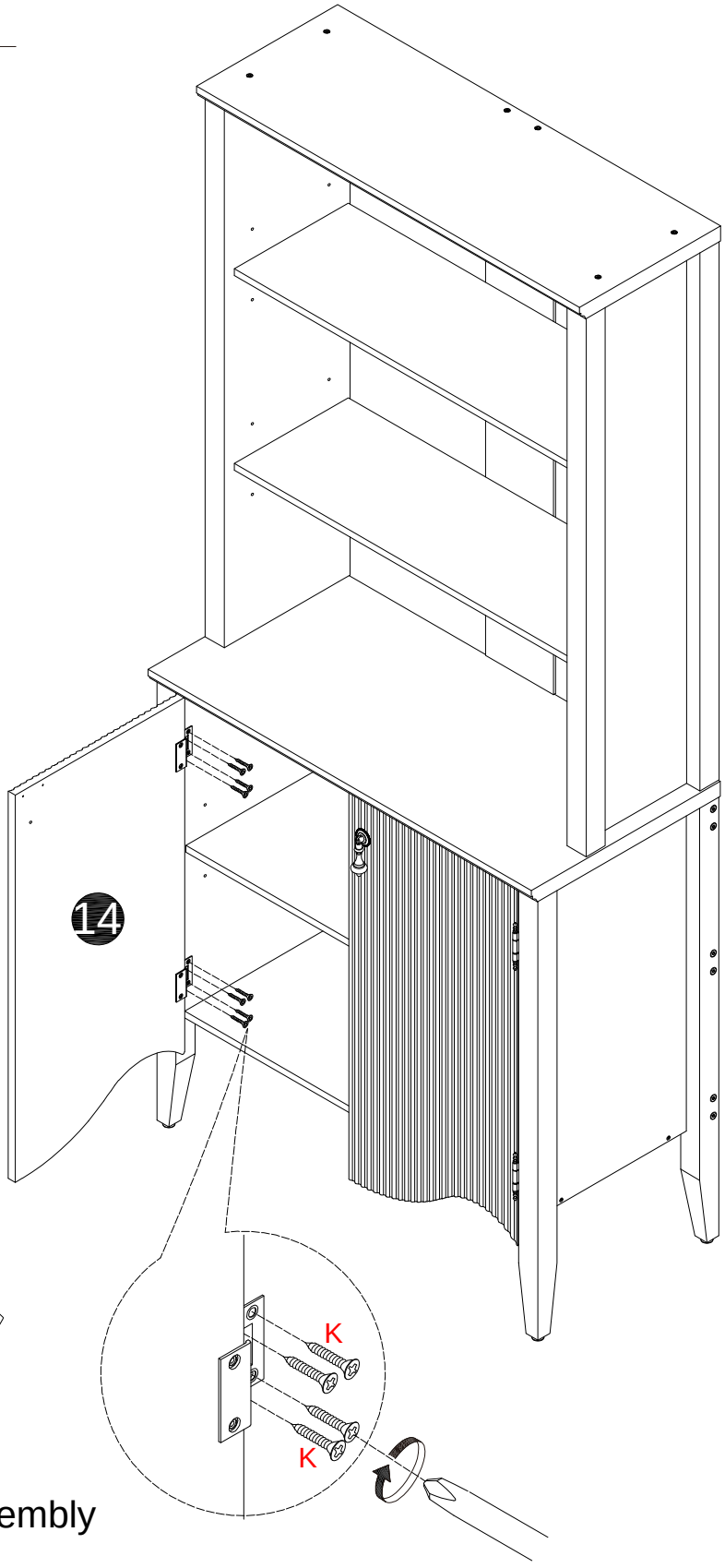

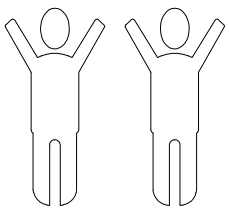

Two-person assembly

STEP 24


L2×1PC

K×2PCS

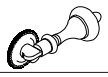
G1×1PC


G2×1PC

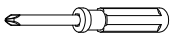

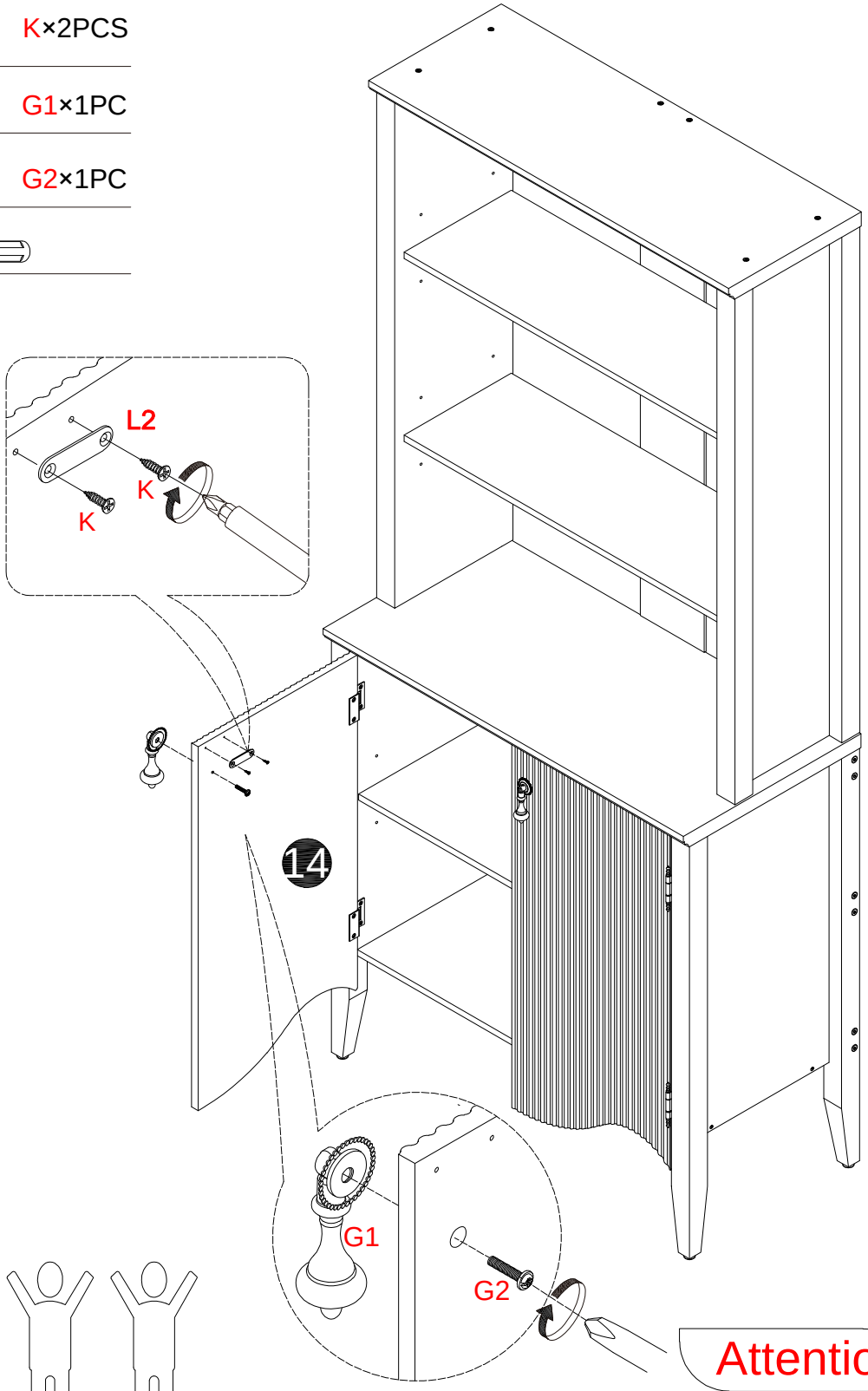

Two-person assembly

Attention

Align the handle properly before tightening the screws. Do not rotate the handle during installation.

STEP 25


I×12PCS


J×12PCS

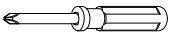

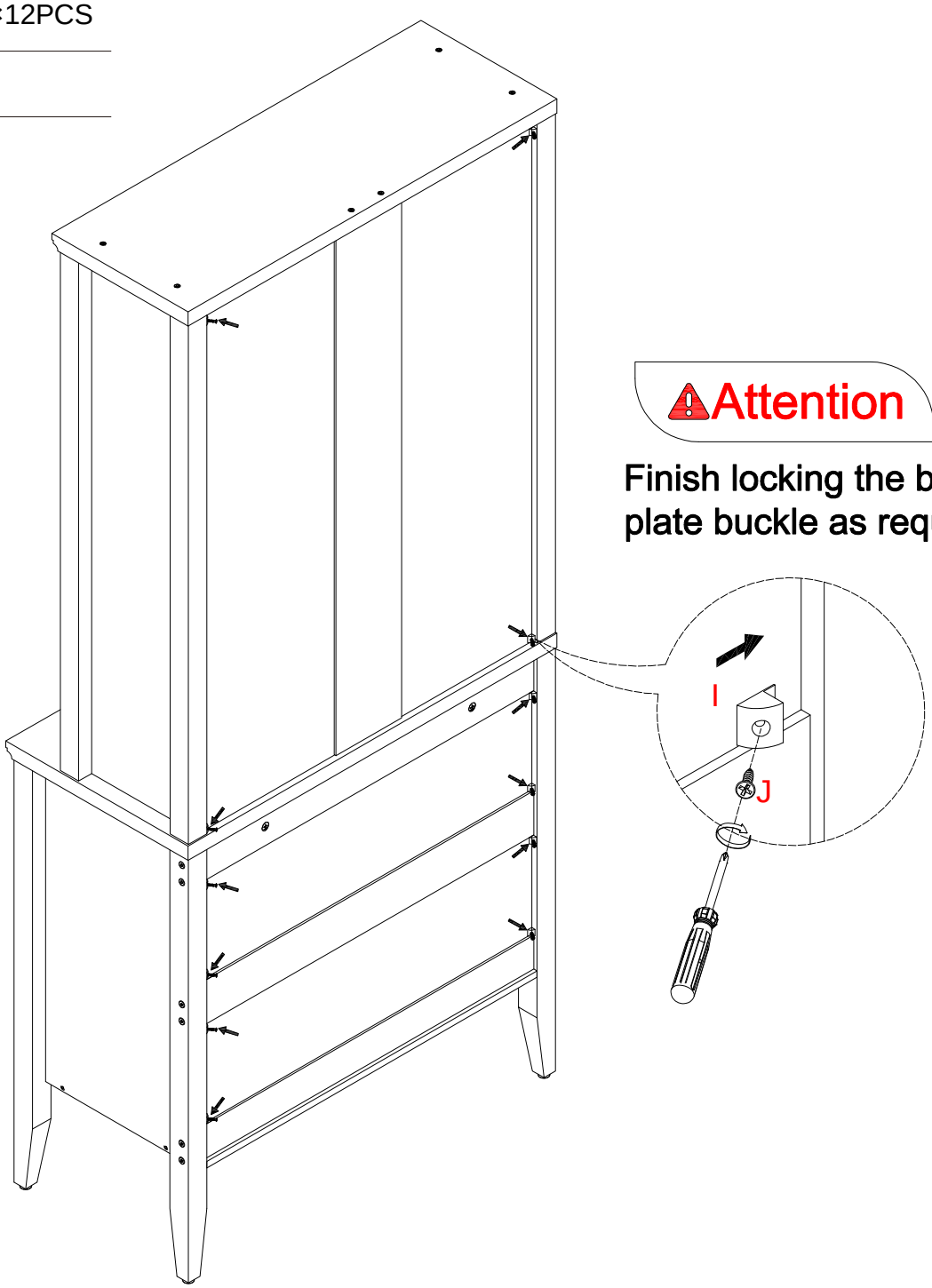

STEP 26

	Kx2PCS
	R1x2PCS
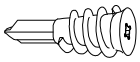	R2x2PCS
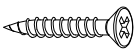	R3x2PCS
	S1x2PCS
	S2x2PCS
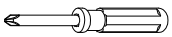	

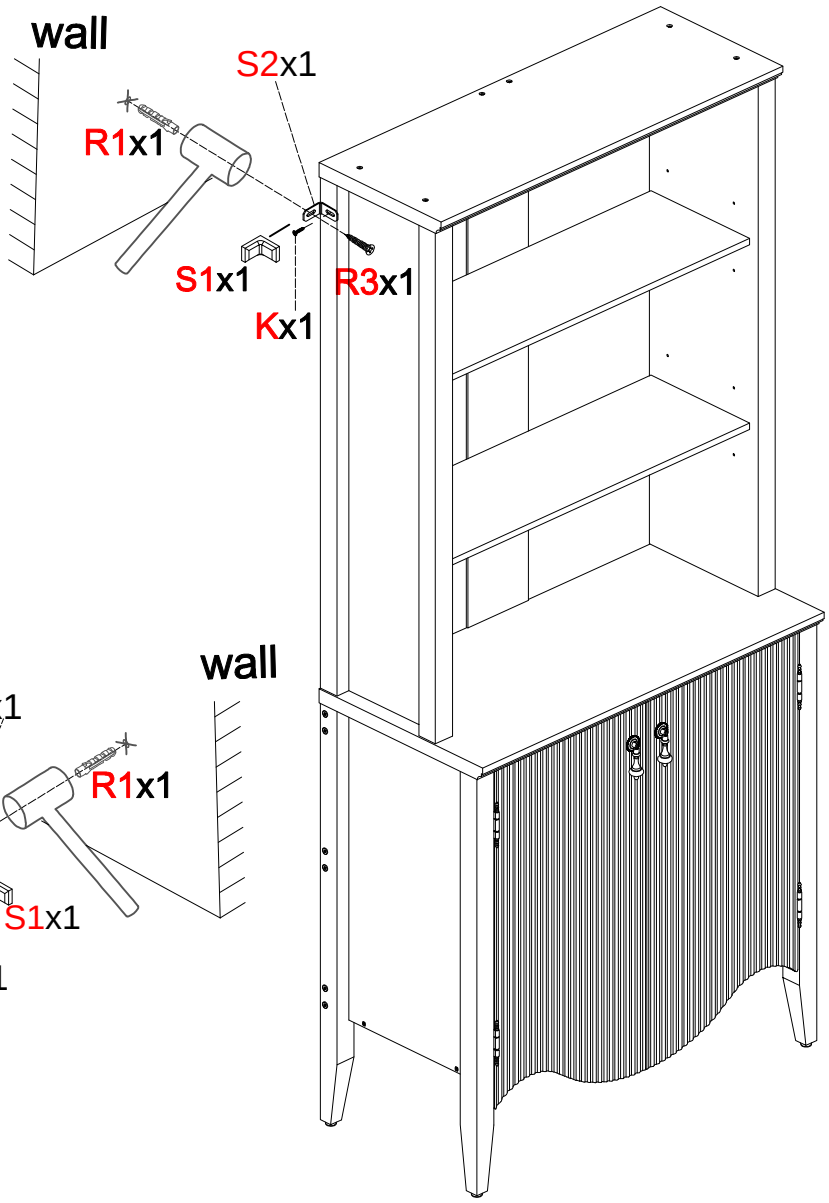

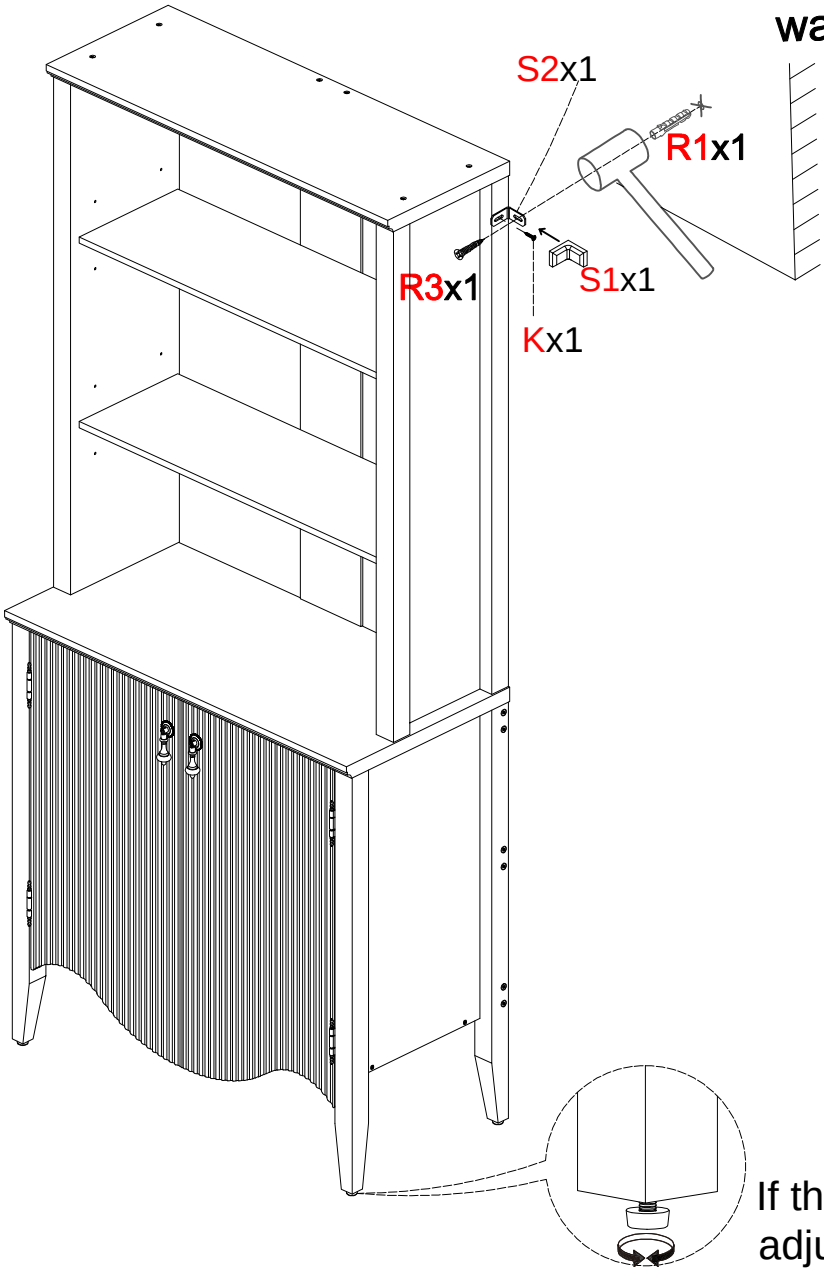

If the cabinet is uneven, you can adjust the leveling feet here.

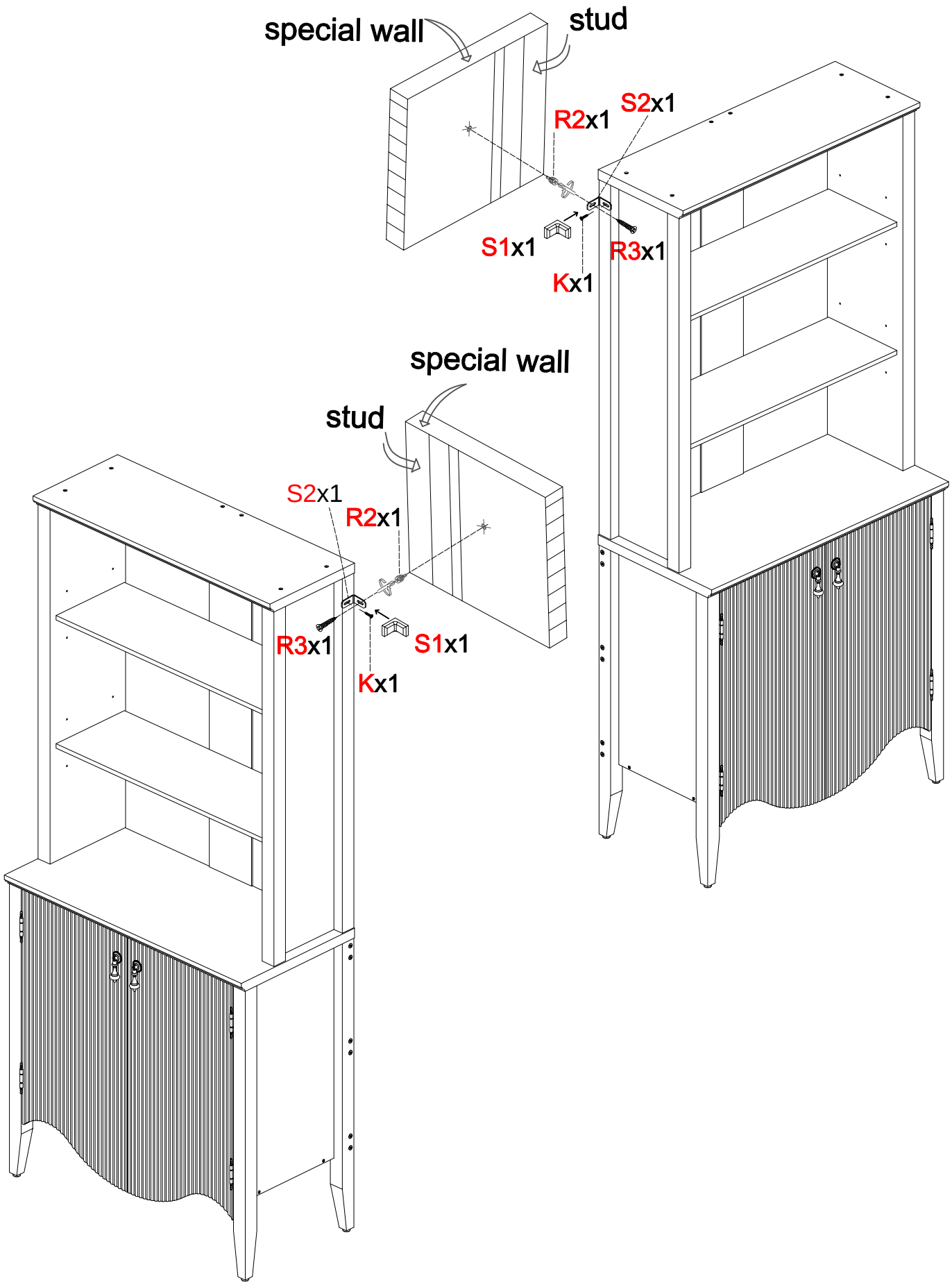
special wall
stud
S2x1
R2x1
S1x1
R3x1
Kx1
special wall
stud
S2x1
R2x1
R3x1
S1x1
Kx1