KZ161

①

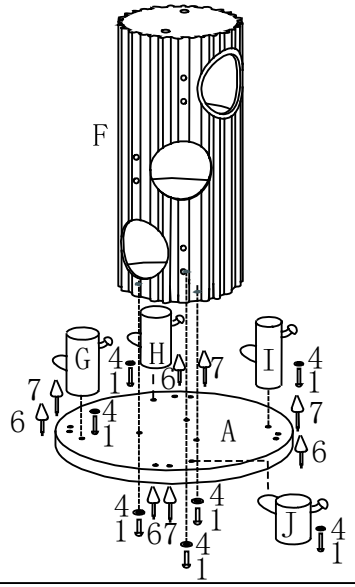

②

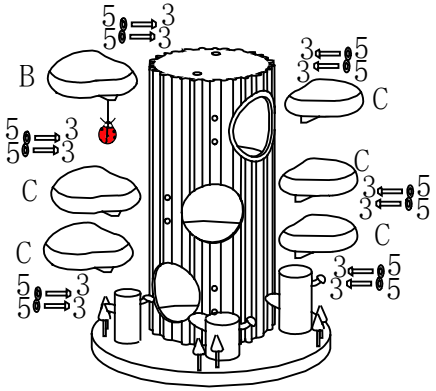

③

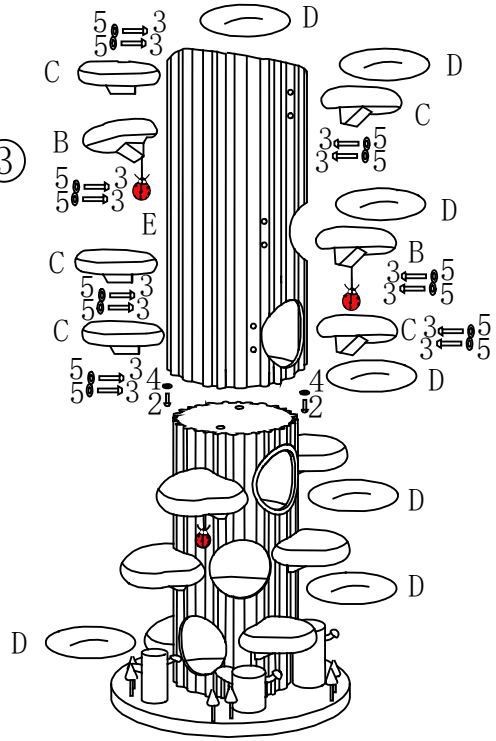

④

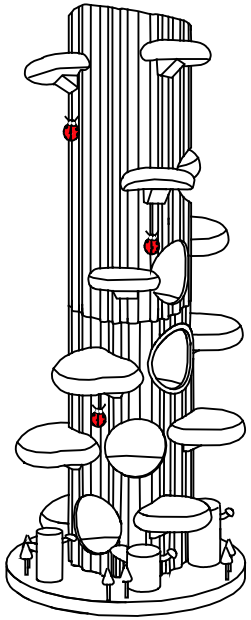

1X	D101*6cm	A	
3X	35*27*14cm	B	
10X	35*27*14cm	C	
7X	D39cm	D	
1X	D46*121cm	E	
1X	D46*106cm	F	
1X	D10*20.5cm	G	
1X	D9*20.5cm	H	
1X	D8*20.5cm	I	
1X	D12*17cm	J	

7X	D10*70mm	(1)
2X	D10*35mm	(2)
26X	D8*60mm	(3)
9X	D40mm	(4)
26X	D30mm	(5)
4X		(6)
4X		(7)

1X D6MM
D5MM

SIZE: 101*101*230CM