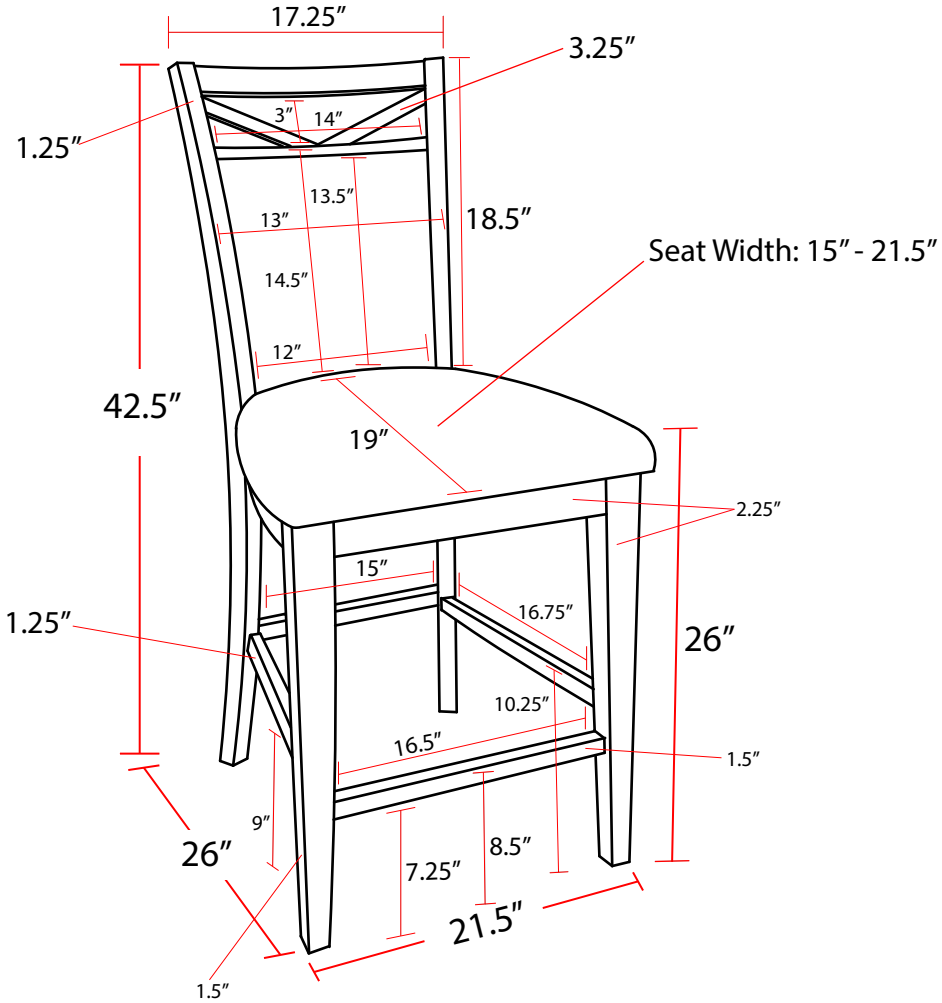Americana Dining 2226 Upholstered Counter Chair
Overall: 21.5″ x 26″ x 42.5″