Glass Display Cabinet
Installation Instructions

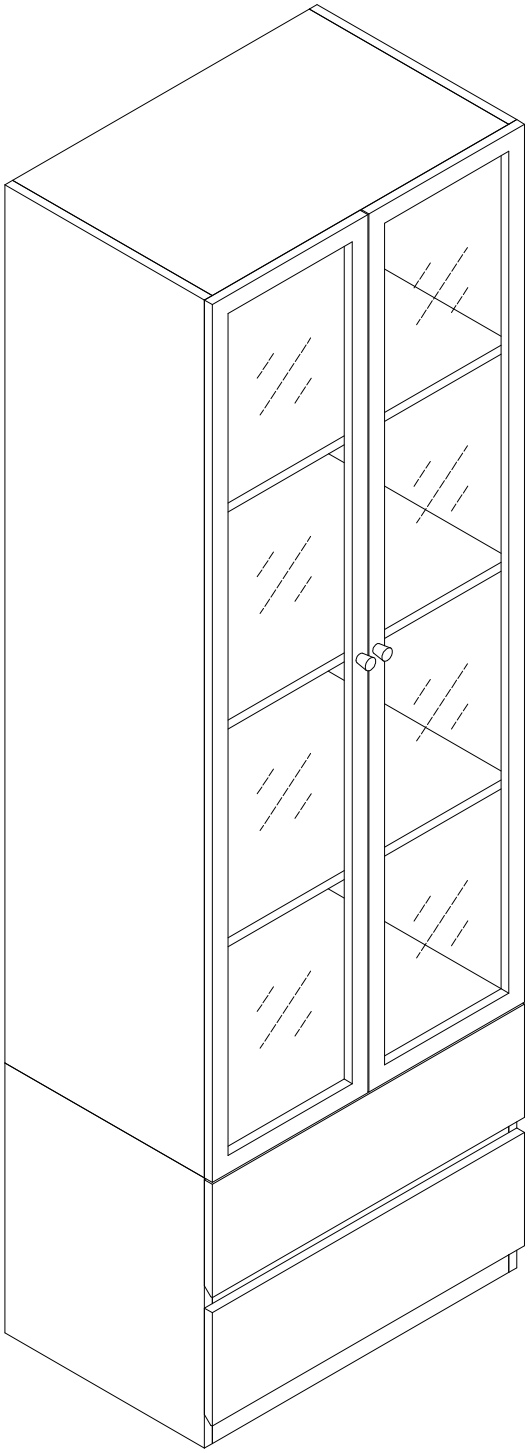

#SC002D

Contents

Before Use

General Guidelines.....2
Warning.....2
Material Properties.....2
Assembly Instructions.....2
Tools You May Needs.....2

Installation Guide

Parts List.....3-4
Accessories List.....5
Exploded Views.....6
#B (connector bolt) Installation steps.....7
Incorrect installation.....8
#A (eccentric cam lock) Installation steps.....8
Watch The Installation Video To Assist With Installation.....8
Installation Steps.....9-29

Maintenance & Troubleshooting

Use and Maintenance.....30
Trouble Shooting.....31

Special Accessories Installation Instructions

Hinge Adjustment Diagram.....32
How to use light strips.....33-35

After-Sales Warranty.....36

General Guidelines

- Please read the following instructions carefully and use the product accordingly.
- Please keep this manual and hand it over when you transfer the product.
- Product is intended for indoor use only. It must be assembled and used according to the instructions. The seller does not accept any responsibility for damage or injury resulting from improper assembly or use.
- This summary may not include every detail of all variations and considered steps.
- Please contact us when further information and help are needed.

Warning

- Children are not allowed to assemble the product. During assembly, keep any small part out of reach of children as they may be fatal if swallowed or inhaled.
- Children are not allowed to stand, climb or play on the product to avoid serious bodily injury by toppling.
- Keep plastic packing bags out of reach of children to avoid any potential danger, such as suffocation.
- Avoid sharp objects and corrosive chemicals to prevent damage to the product or bodily injury.

Material Properties

1. Solid Wood

Trees will have a unique texture, scar, color and other natural marks during their growth. These elements constitute the natural beauty of wood. After being made into furniture, there will be discoloration when viewed under different light and different angles. That is because different grain minerals and light intensity affect vision, which is a normal phenomenon.

2. Marble and Sintered Stone

The pattern of marble and sintered stone is unique to each piece. Due to the characteristics of the material, there is no guarantee that the pattern of each piece will be consistent with the pattern seen at the time of purchase.

Assembly Instructions

- Read these instructions carefully and keep for future reference. Refer to parts inventory for guidance, and ensure you have all pieces before starting.
- When assembling, place all parts on a soft, clean, and flat surface such as a carpet to prevent scratches.
- During assembly, align all screws with the corresponding pre-drilled holes first and then tighten them one by one.
- Do not discard any contents until after assembly is complete to avoid accidentally discarding small parts or hardware.

Tools You May Needs







- Note: It is recommended that installation of the product be done by a qualified licensed furniture assembler.

PARTS LIST

1 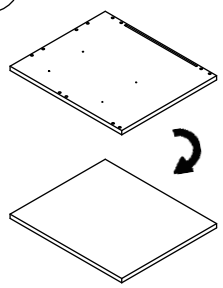	2 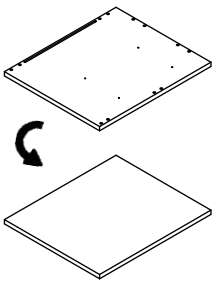	3 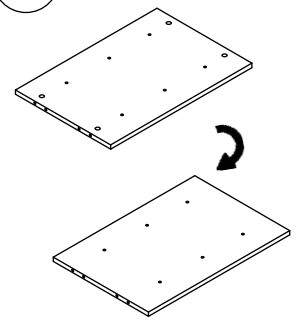	4 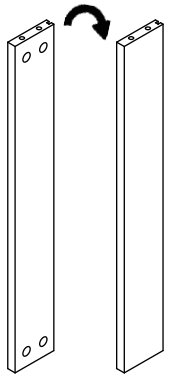
1PC	1PC	1PC	2PCS
5 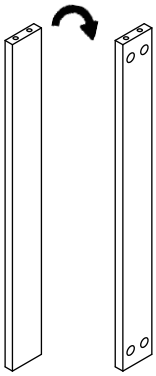	6 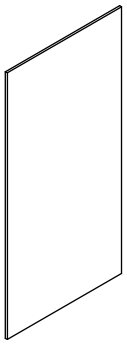	7 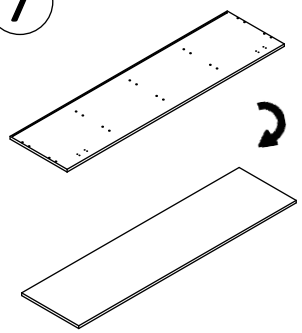	8 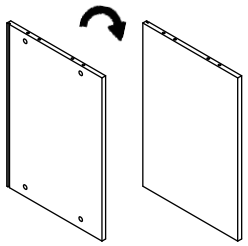
2PCS	1PC	2PCS	1PC
9 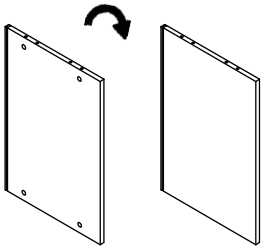	10 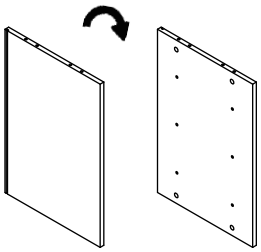	11 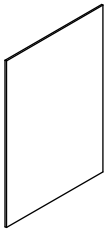	12 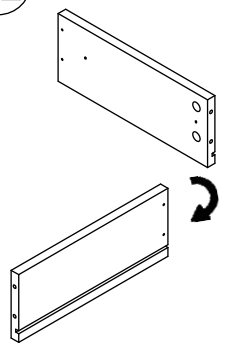
3PCS	1PC	4PCS	2PCS
13 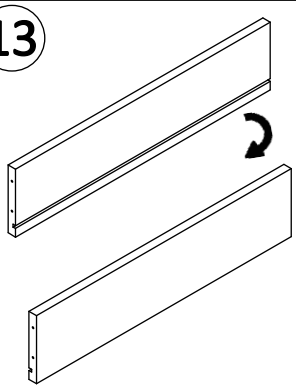	14 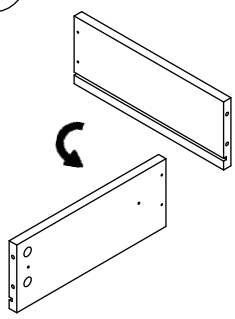	15 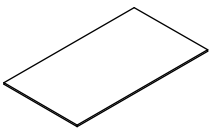	16 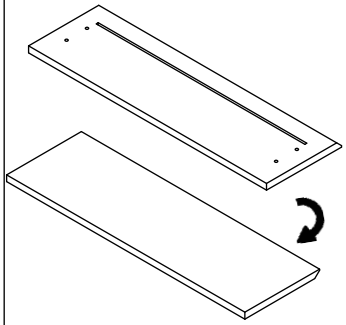
2PCS	2PCS	2PCS	2PCS

PARTS LIST

17	18	
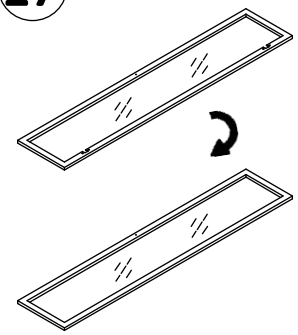	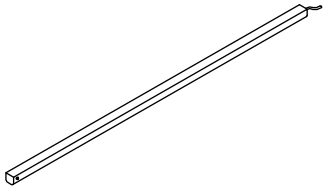	
2PCS	4PCS	

- The number in the upper left corner indicates the panel code, and the number in the lower middle indicates the quantity.
- As some panels feature holes on both sides, both front and back views are provided accordingly in the parts list.
- lf you encounter any missing or damaged panels, please contact us immediately at ATJafurn@outlook.com. We will prioritize resolving your issue promptly.

HARDWARE LIST

A	B	C	D	E
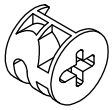	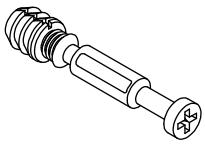	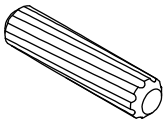	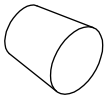	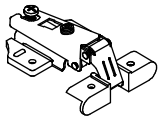
Ø15*10MM 48PCS	Ø6*35MM 48PCS	Ø8*30MM 24PCS	Ø15*17MM 2PCS	4PCS

E1	E2	F	G	H
		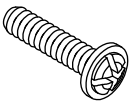		
Ø4*6MM 8PCS	Ø3.5*16MM 16PCS	Ø4*25MM 2PCS	Ø3.5*35MM 8PCS	Ø3.5*14MM 28PCS

I	J	K	L	M
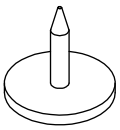	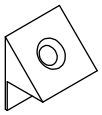	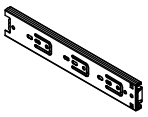	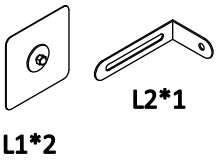	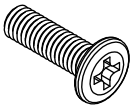
4PCS	12PCS	10" 4PCS	3PCS	Ø6*25MM 6PCS

Exploded Views

Each wooden board has an number sticker. Match them one-by-one according to the steps in the assembly manual.

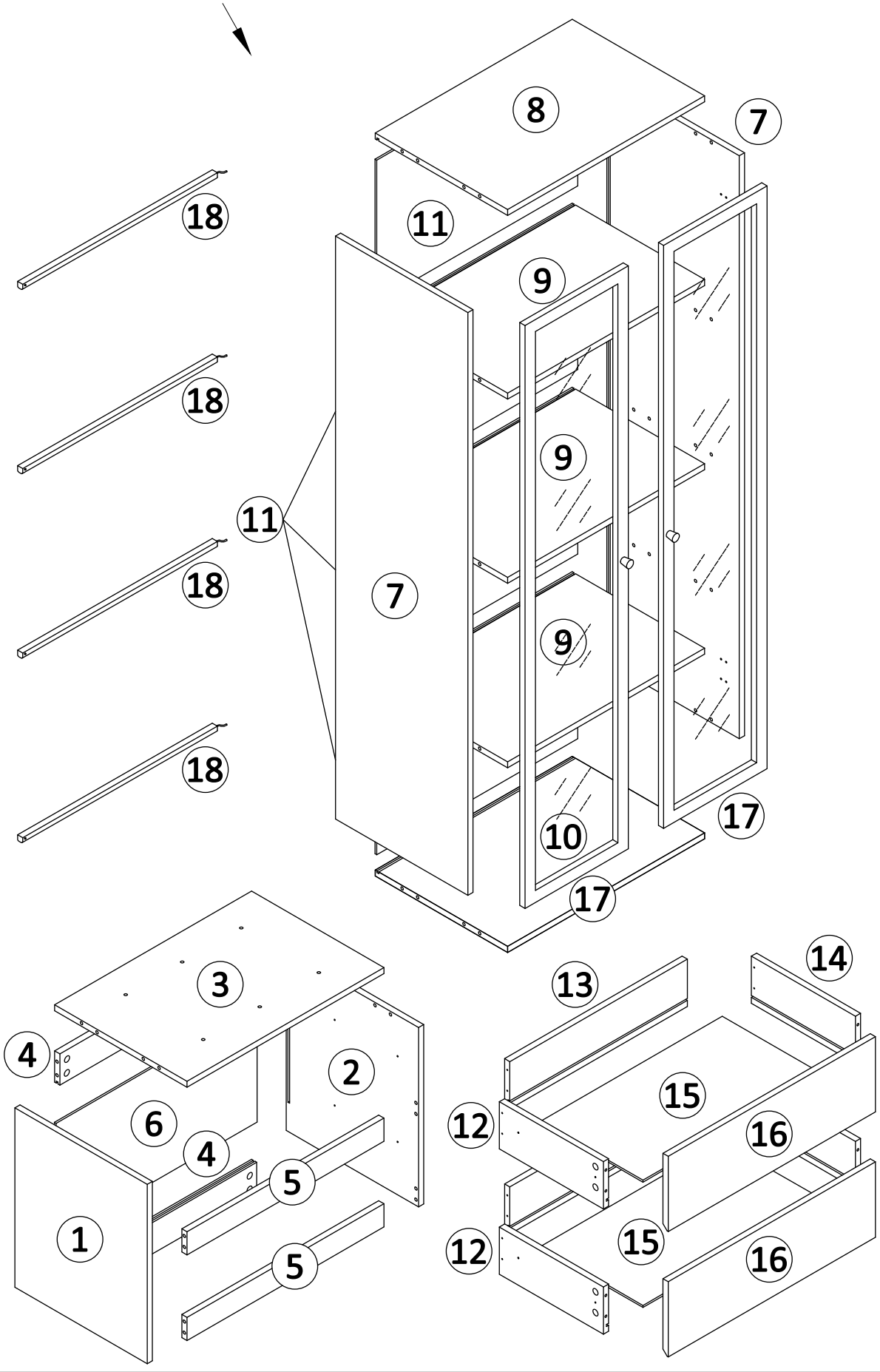

#B (connector bolt) Installation steps

Step 1

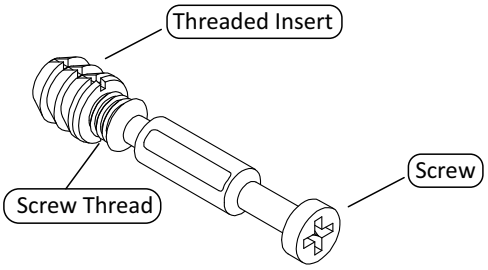

1. The structure of #B (connector bolt) is divided into threaded Insert and screw.
Preparation: Please note that the threaded insert and screw do not need to be tightened; two-thirds of the threads should be exposed.

Step 2

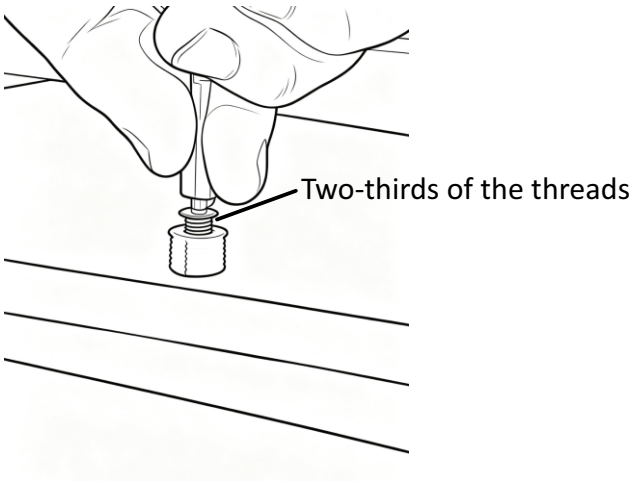

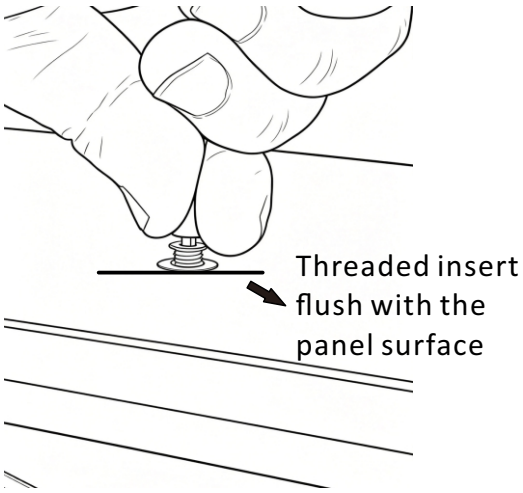

2. Insert #B (connector bolt) into the hole by hand. Initially, insert the threaded insert (left image). The threaded insert must be flush with the panel surface, with part of the screw exposed (right image).

Step 3

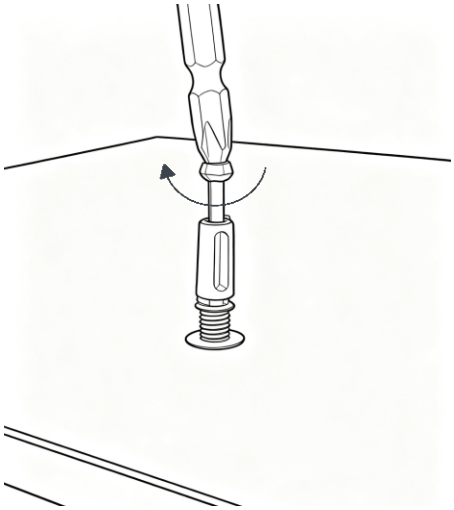

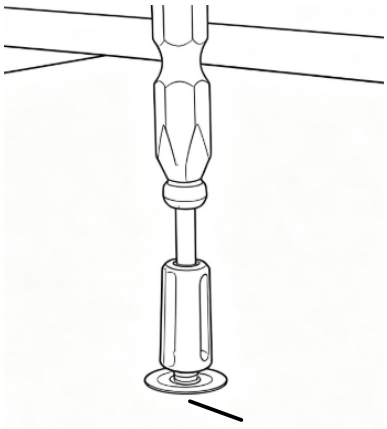

When the threaded insert is flush with the panel, #B is already installed.

3. Use a screwdriver to drill the screw in until the threads disappear. Complete the installation of #B (connector bolt).

Incorrect installation

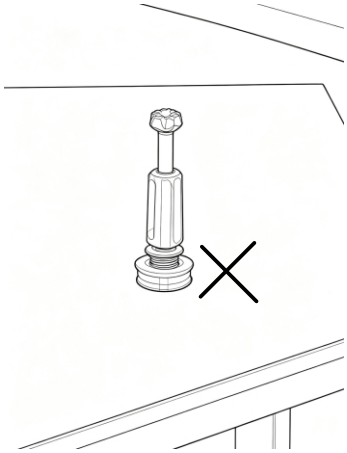

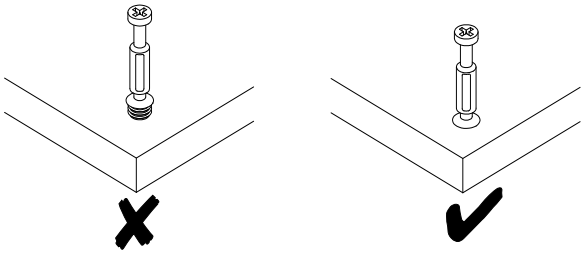

Incorrect Example: In step 2, when inserting the threaded insert, it wasn't fully inserted, not flush with the panel, and a small crack may appear around the hole.

Cause of Error: The thread length between the threaded insert and the screw is too short (less than two-thirds), preventing it from being inserted properly. Forcing it in will break the panel (left image).

Solution: Unscrew the screw slightly to leave sufficient thread length, then repeat steps 2-3.

#A (eccentric cam lock) installation steps

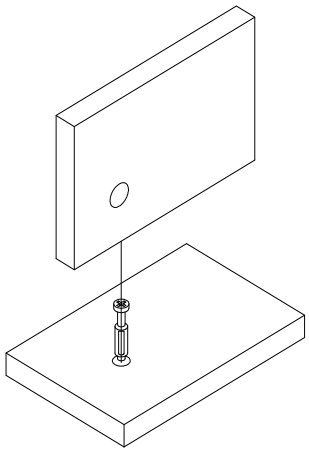

After installing #B (connector bolt), connect the panels to each other.

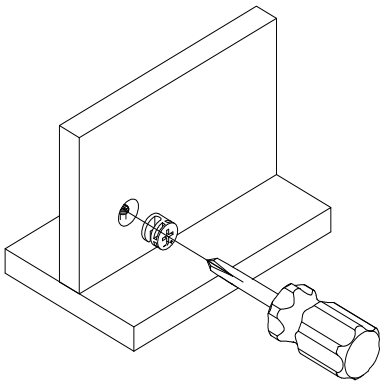

Align the arrow of the eccentric component with the screw rod.

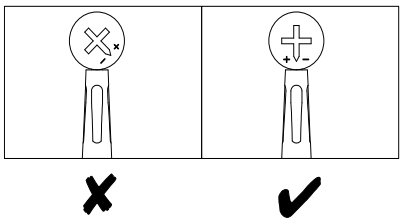

Pay attention to aligning the arrow of the eccentric part with the screw rod.

Watch The Installation Video To Assist With Installation

Attention!

Some steps may not be displayed intuitively on the paper manual, so we filmed the installation video. Please **use the camera APP to scan the QR code** to our brand website to watch the video. The website will not charge and will not record your personal information, so please feel free to use it.

Step 1

B 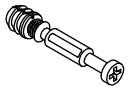 X48

As shown in the diagram, screw #B (connector bolt) into the corresponding holes of the panels 1/2/7x2/16x2.

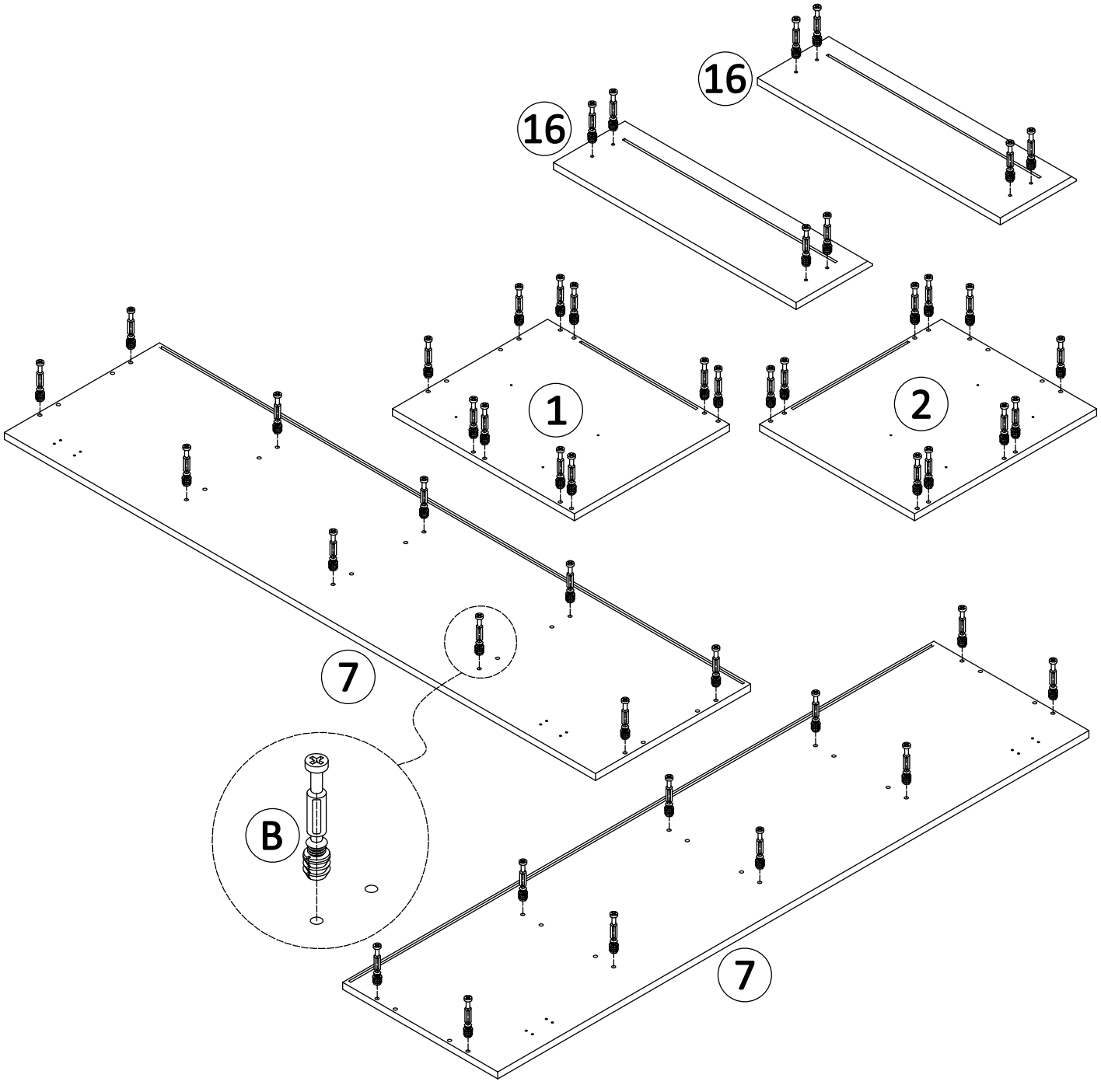

Step 2

Divide the guide rail K into two parts, K1 and K2.

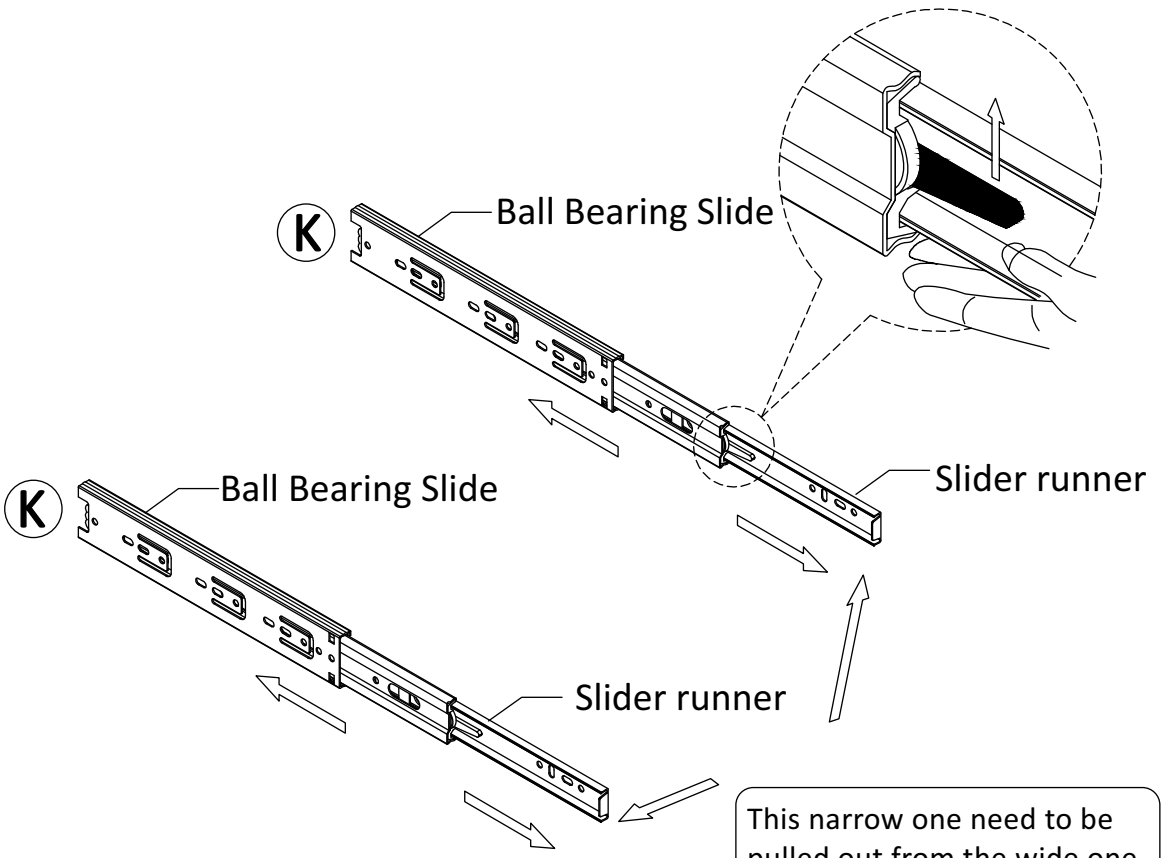

This narrow one need to be pulled out from the wide one. It is installed on the side panel of drawers.

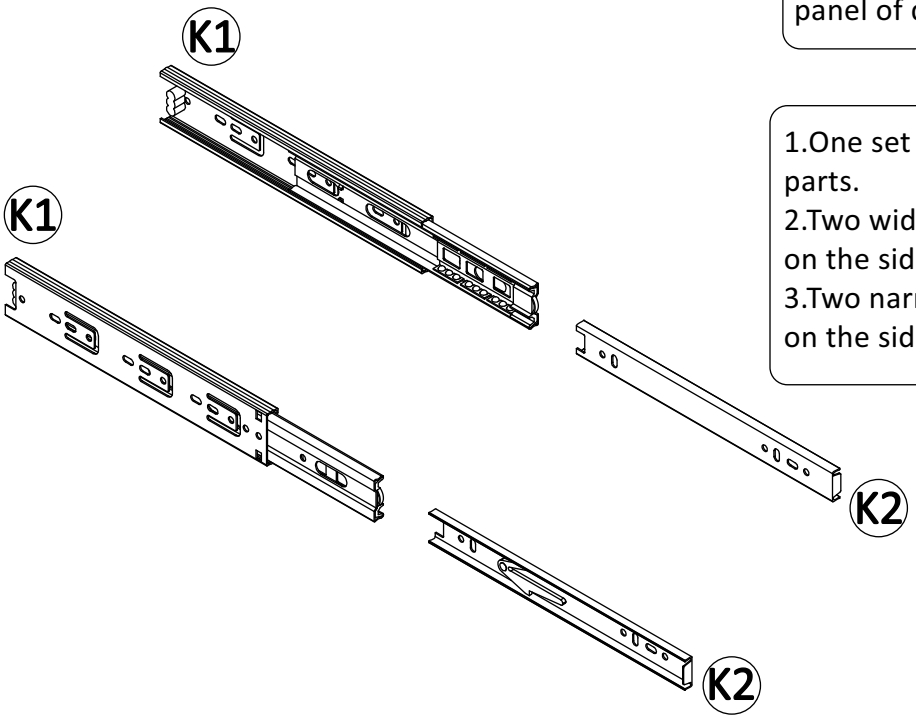

1.One set of guide rail should be four parts.
2.Two wide guide rails are installed on the side panel of the cabinet.
3.Two narrow guide rails are installed on the side panel of drawers.

Attention:
Take care when installing the slide rails as they have been pre-lubricated.

Step 3

H X8

K1 X4

Secure the #K1 to the pre-drilled holes on panel 1 and panel 2 using #H (screws). As shown in the diagram, each panel is equipped with #K1 in 2 locations.

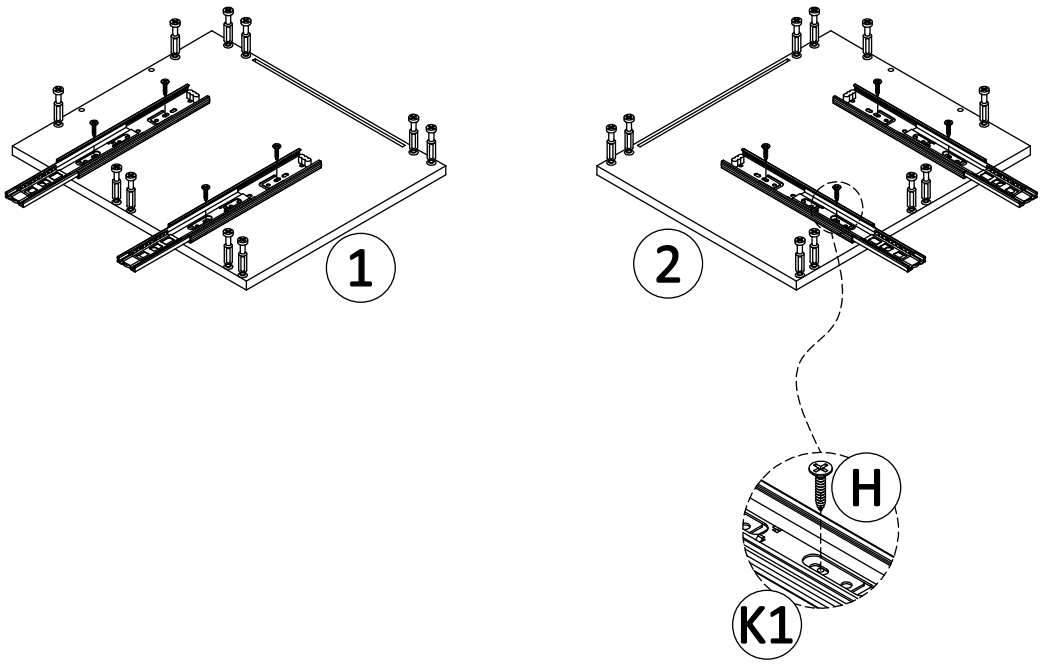

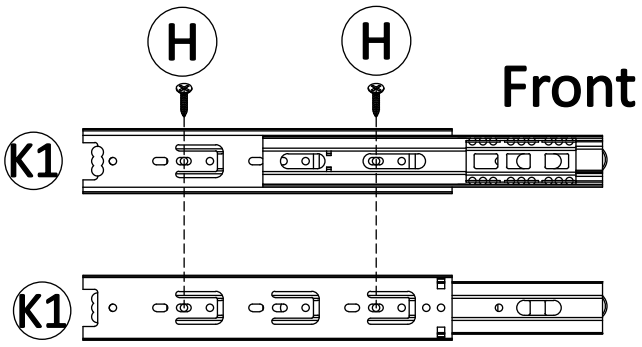

Step 4

1. First, screw the #C (wood dowel pins) into panel 2 and tighten it.

2. Second, orient the components as shown in the diagram. Orient two panels 5 with holes facing inward, engage them onto the left side of the #K1, then install and tighten #A (eccentric cam lock).

3. Finally, install the two panels 4 and one panel 3 onto panel 2, ensuring that the grooves of panels 4 are aligned with the grooves of panel 2. Then tighten #A (eccentric cam lock) to secure.

A  X10

C  X2

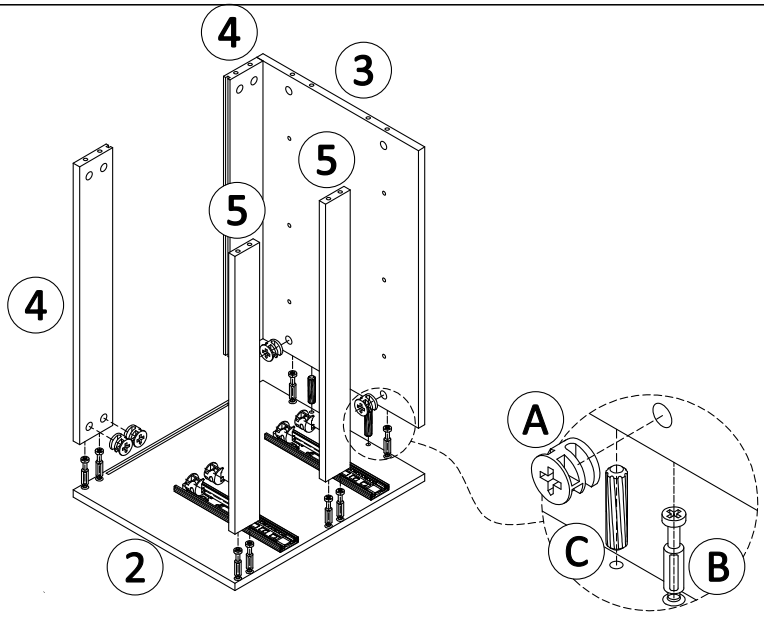

Step 5

As shown in the figure, insert panels 6 into the grooves of the cabinet.

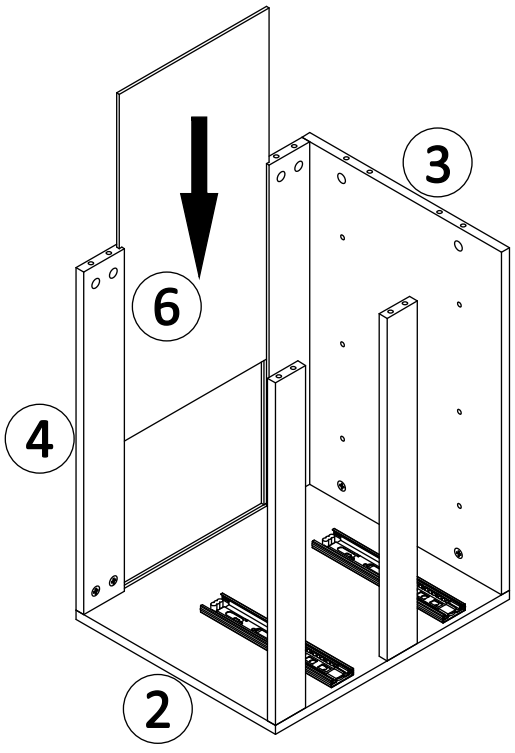

Step 6

1. First, insert #C (wood dowel pins) into panels 3.

2. Then, align panel 1 with the corresponding holes and install it.

3. Finally, screw #A (eccentric cam lock) into the designated hole.

A  X10

C  X2

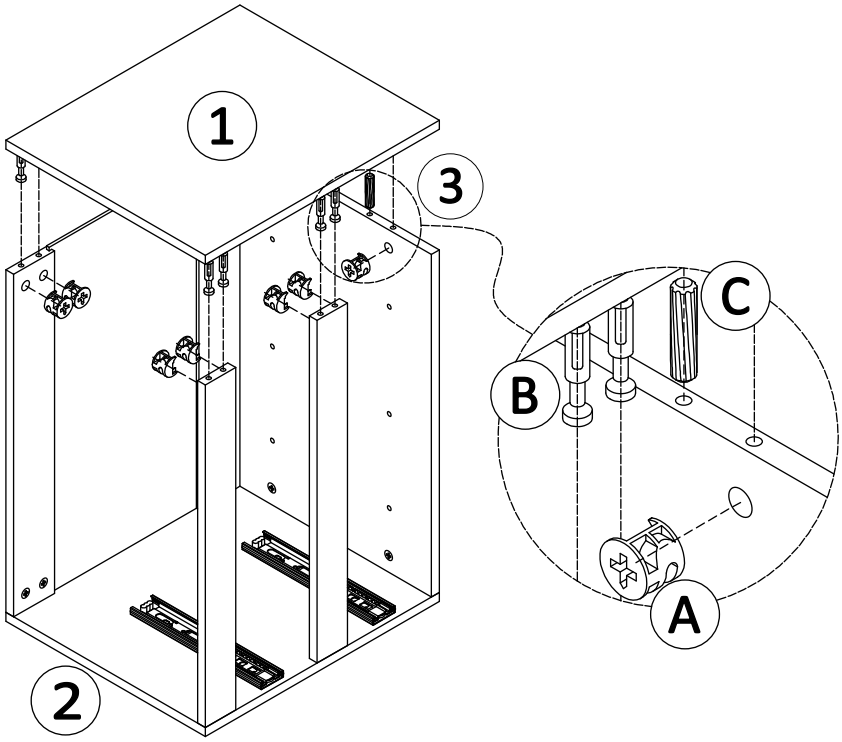

Step 7

As shown in the figure, install #I (foot nails) to the bottom edges of panels 1 and 2 to prevent sliding. (Note that there are no pre-buried holes in this location and you will need to hammer them in.)

I  X4

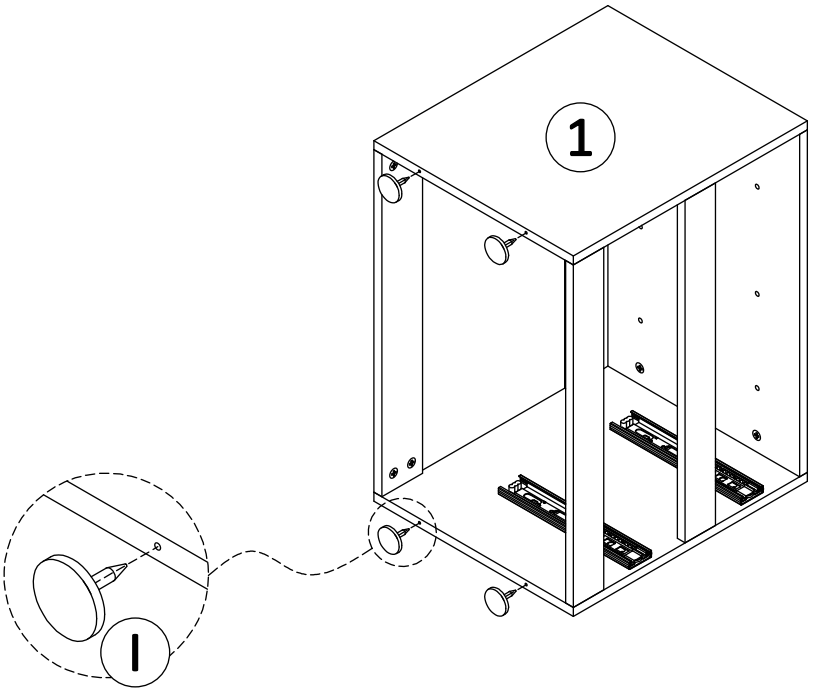

Step 8

1. First, screw the #C (wood dowel pins) into panel 7 and tighten it.

2. Second, install the three panels 9, one panel 8 and 10 onto panel 7, ensuring that the grooves of panels 8 & 9 & 10 are aligned with the grooves of panel 7. Then tighten #A (eccentric cam lock) to secure.

A  X10

C  X10

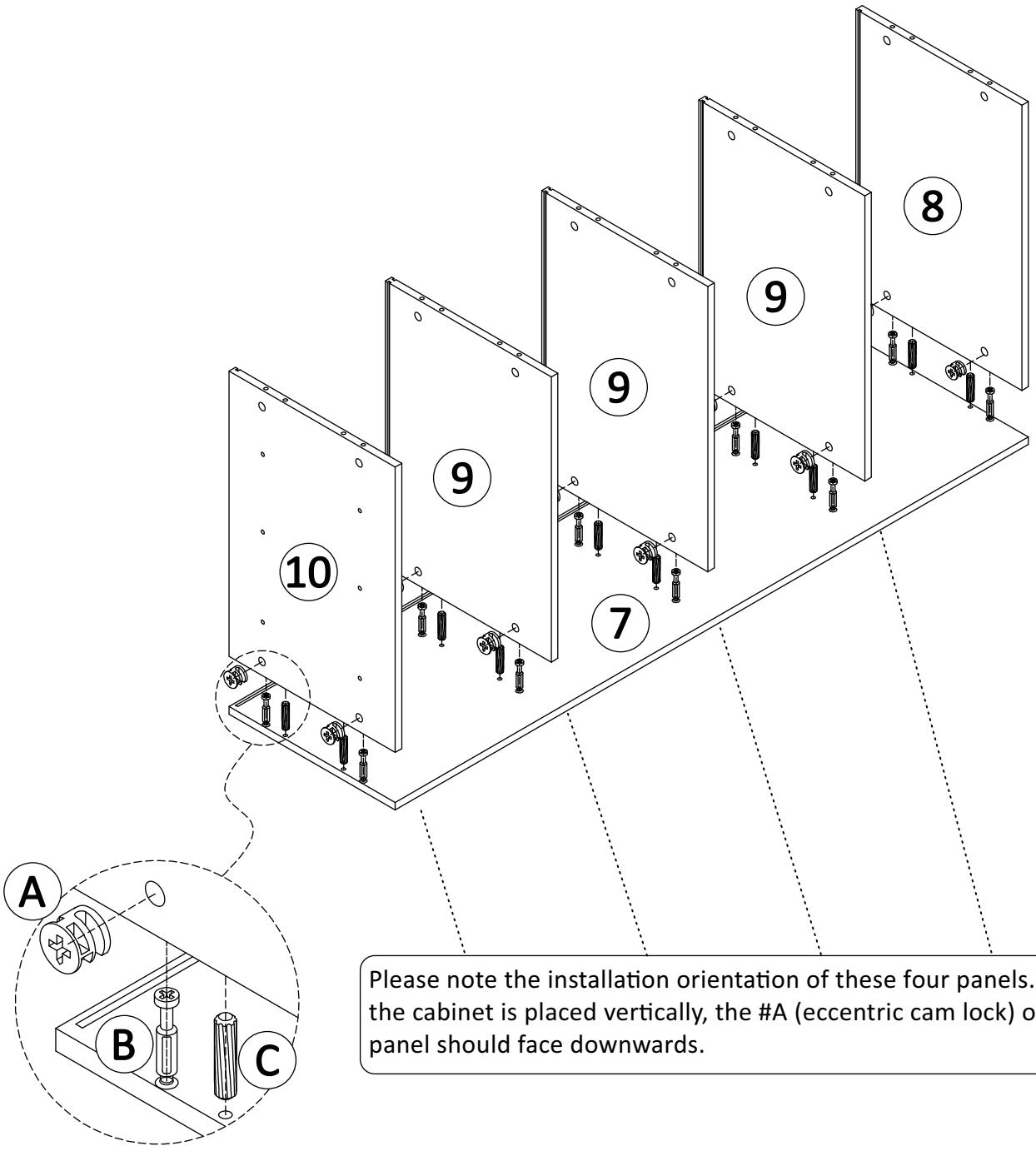

Please note the installation orientation of these four panels. When the cabinet is placed vertically, the #A (eccentric cam lock) on the panel should face downwards.

Step 9

As shown in the figure, insert panels 11 into the grooves of the cabinet.

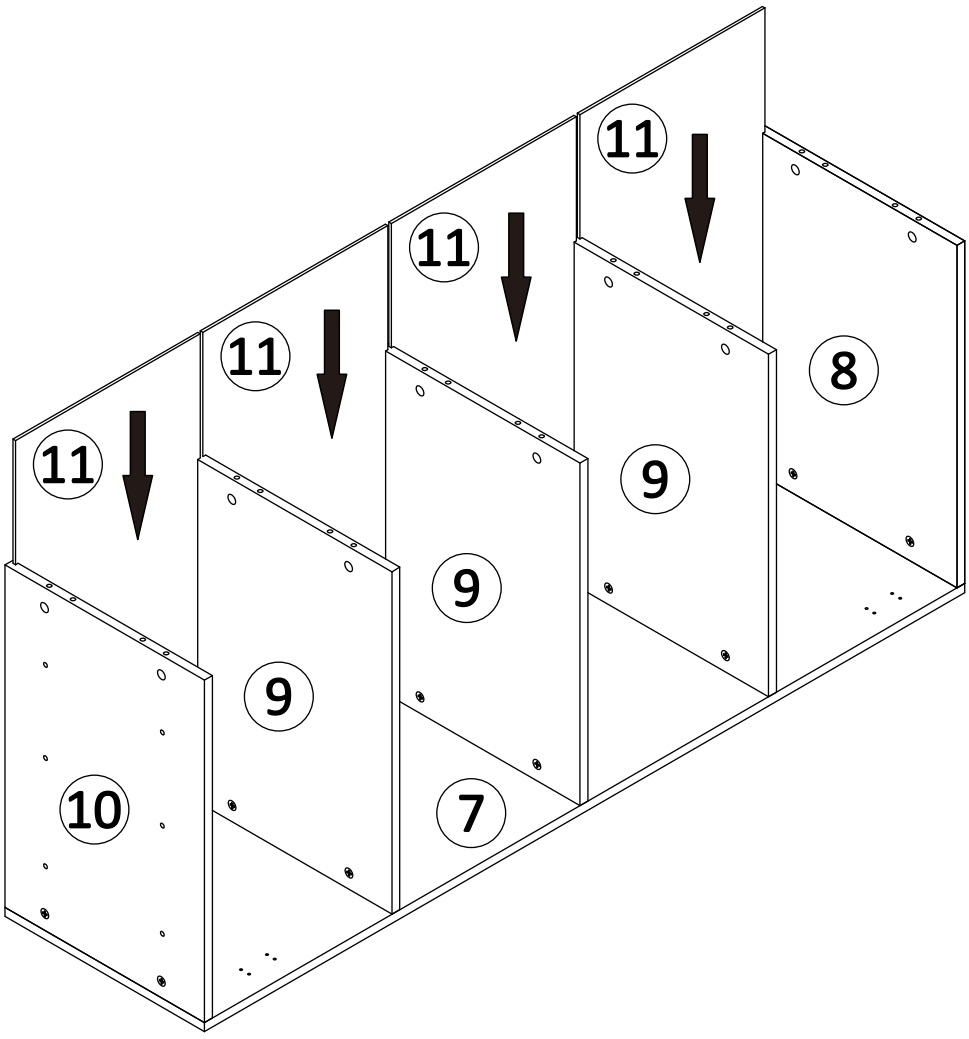

Step 10

1. First, insert #C (wood dowel pins) into panels 8/9x3/10.

2. Then, align panel 7 with the corresponding holes and install it.

3. Finally, screw #A (eccentric cam lock) into the designated hole. (It is recommended that two people perform this step).

A  X10

C  X10

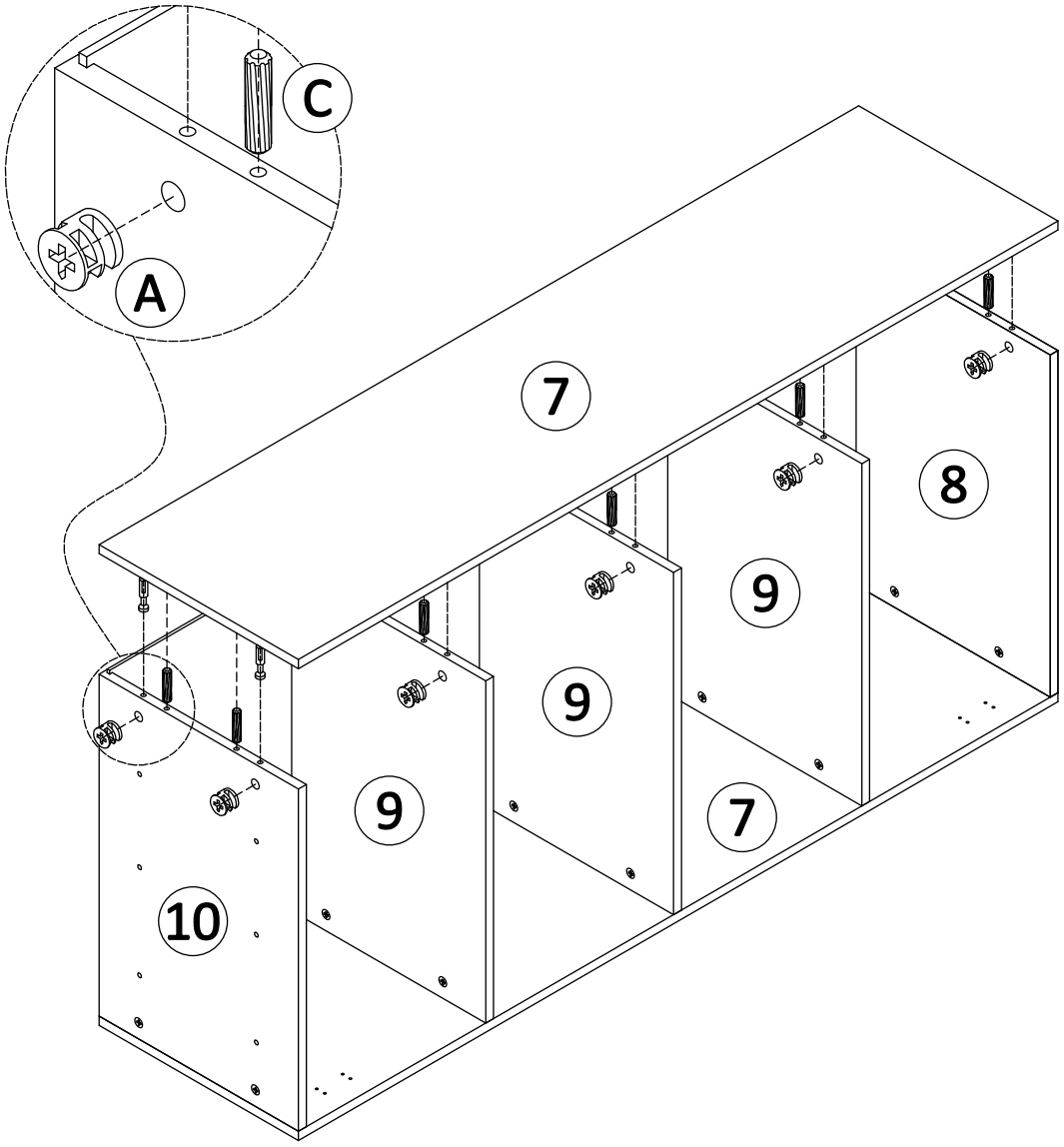

Step 11

M 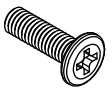 X6

The glass cabinet is divided into upper and lower sections and must be assembled on-site. This step requires two people to complete.

1. Align the bottom panel of the upper cabinet with the top panel of the lower cabinet. One person should hold the upper cabinet steady.

2. The second person aligns the remaining lower section with Panel 10, then secures both parts together using #M (screws).

3. Tips: Before fully tightening the screws, check that the cabinet is level and properly positioned to avoid issues during installation or moving.

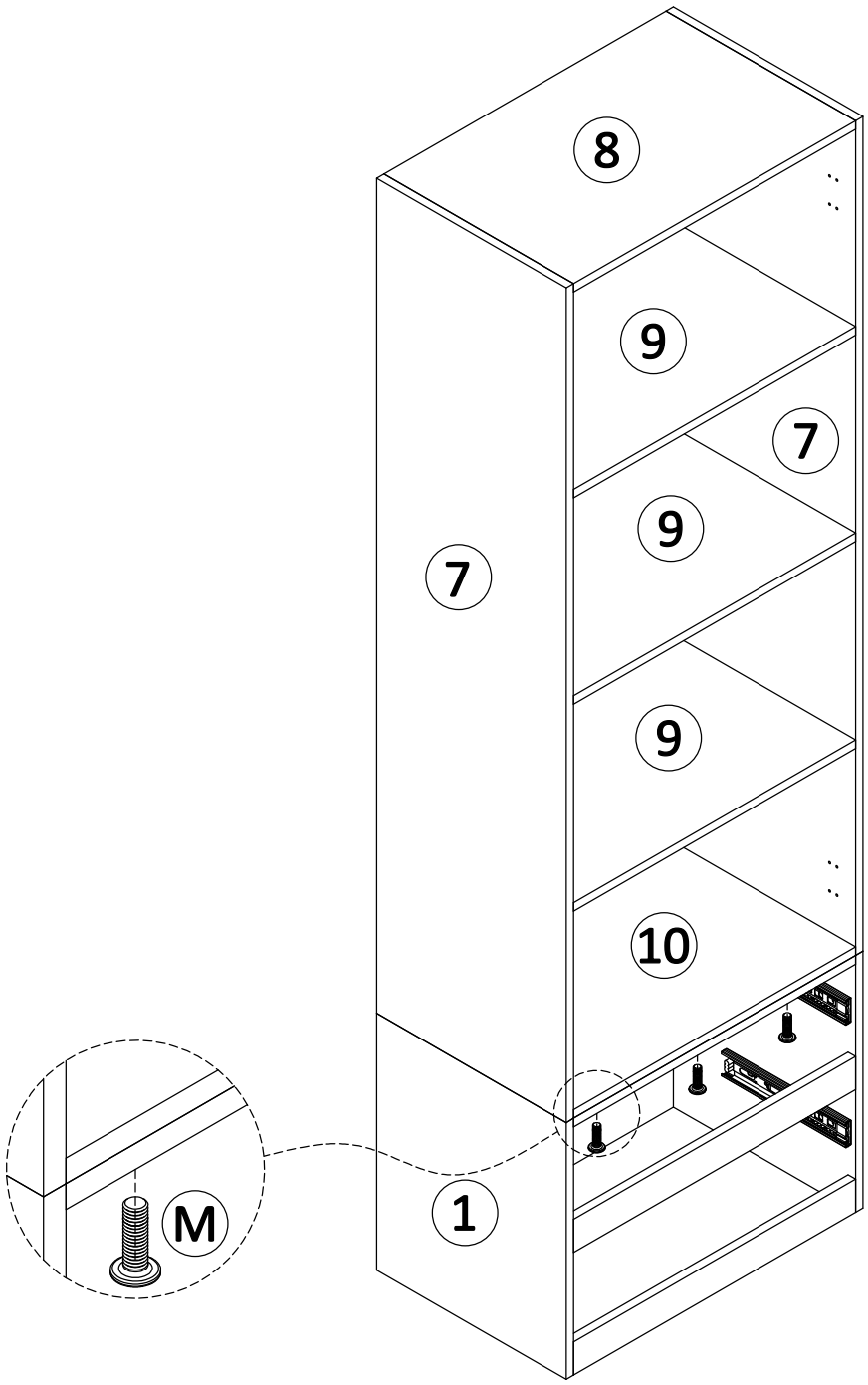

Step 12

As illustrated secure panel 11&6 by installing #J (backplate bracket) at all marked positions with #H (screws).

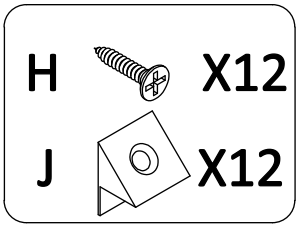

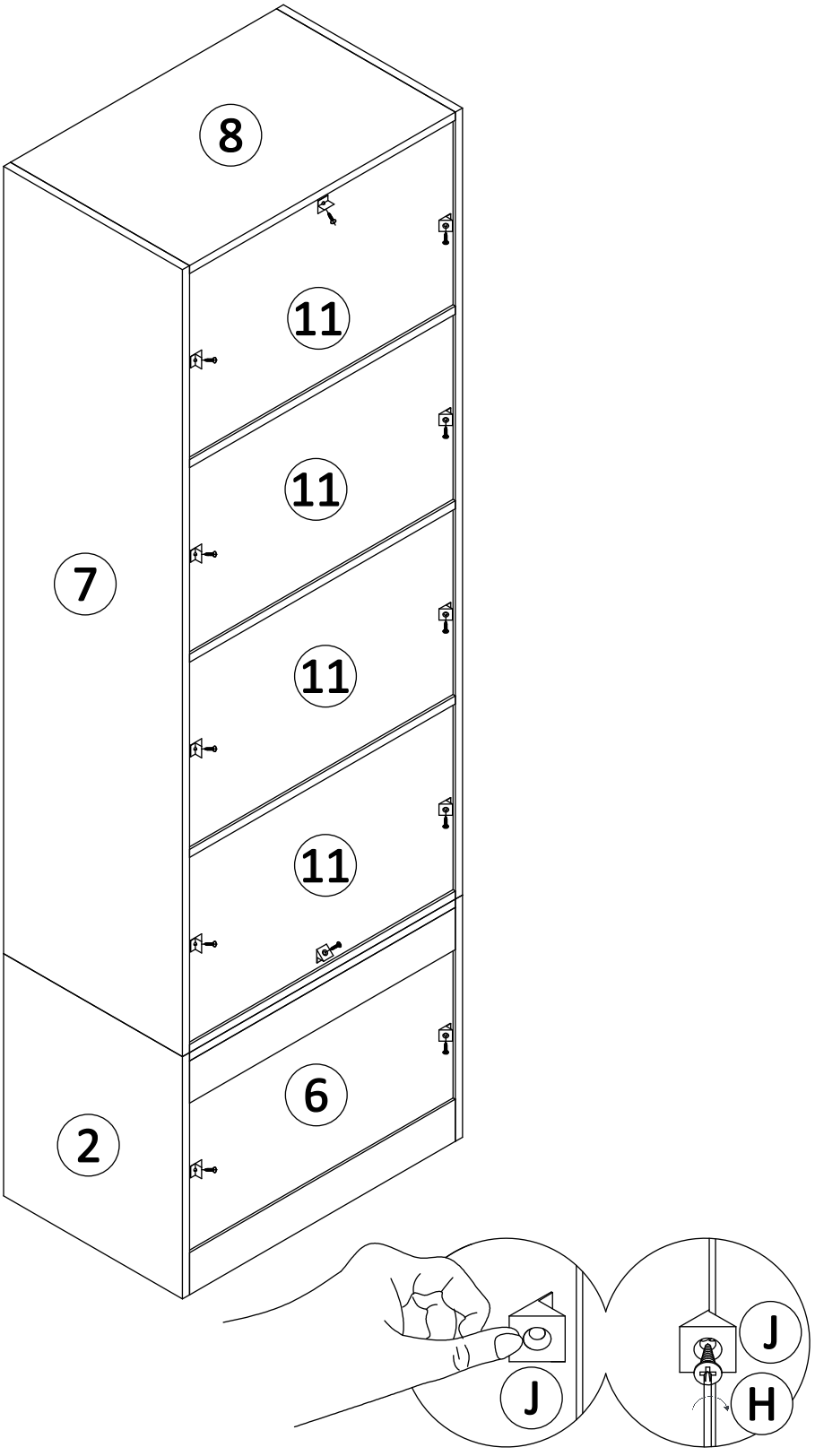

Step 13

G  X4

Drawer Assembly:

Using #G (screws) secure panel 12 and panel 14 to both sides of panel 13, ensuring the grooves are aligned in the same direction.

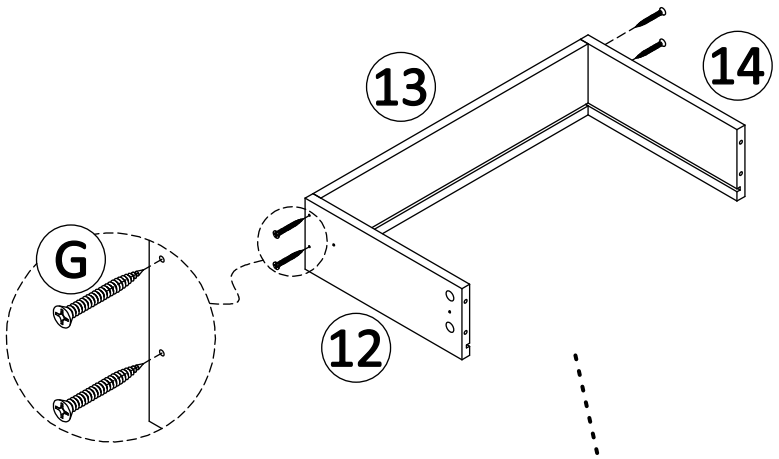

This step requires installation twice times.

X2

Step 14

Insert the panel 15 drawer base into the pre-assembled structure until it snaps into position.

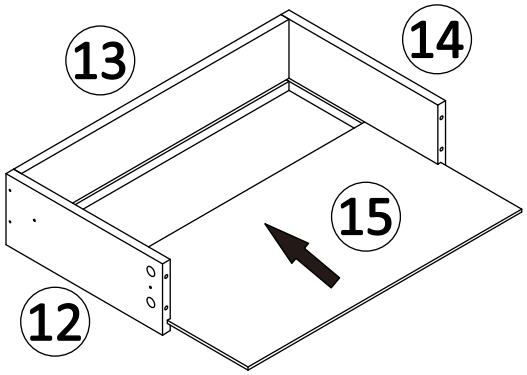

This step requires installation twice times.

X2

Step 15

Mount panel 16 (drawer front) with the beveled edge facing downward, then secure it by tightening #A (eccentric cam lock) into the side mounting holes.

A  X4

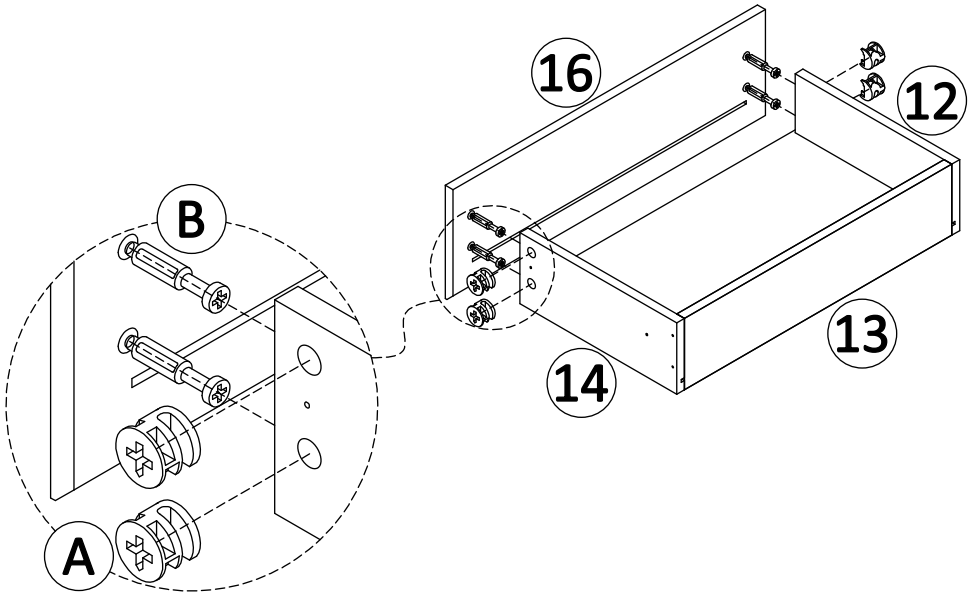

X2

Step 16

Attach the #K2 to both sides of the drawer using the #H (screws).

This step requires installation twice times.

H  X4

K2  X2

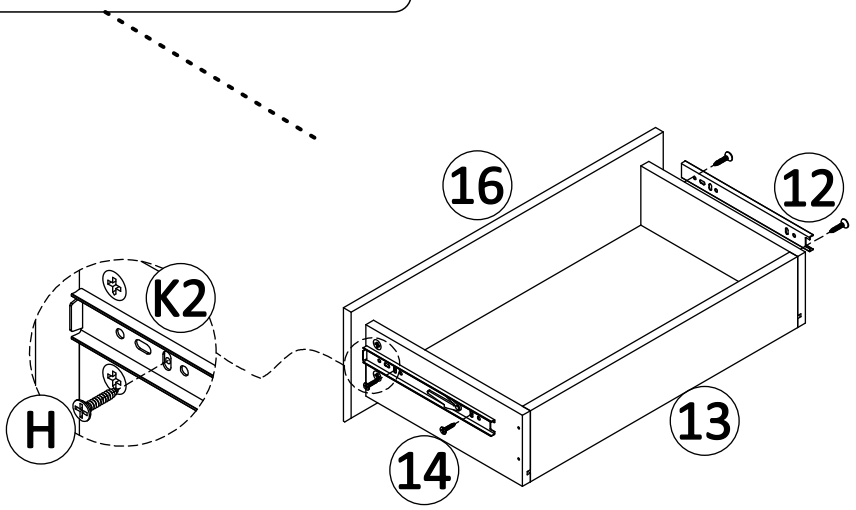

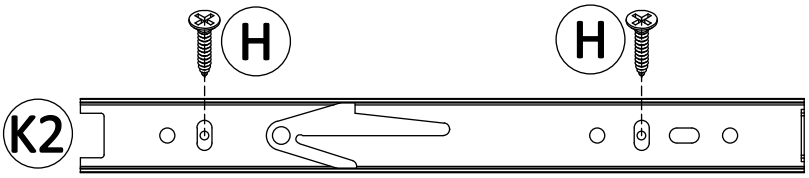

X2

Step 17

Slide the drawer with the installed inner rails into the corresponding slots in the cabinet until it clicks into place.

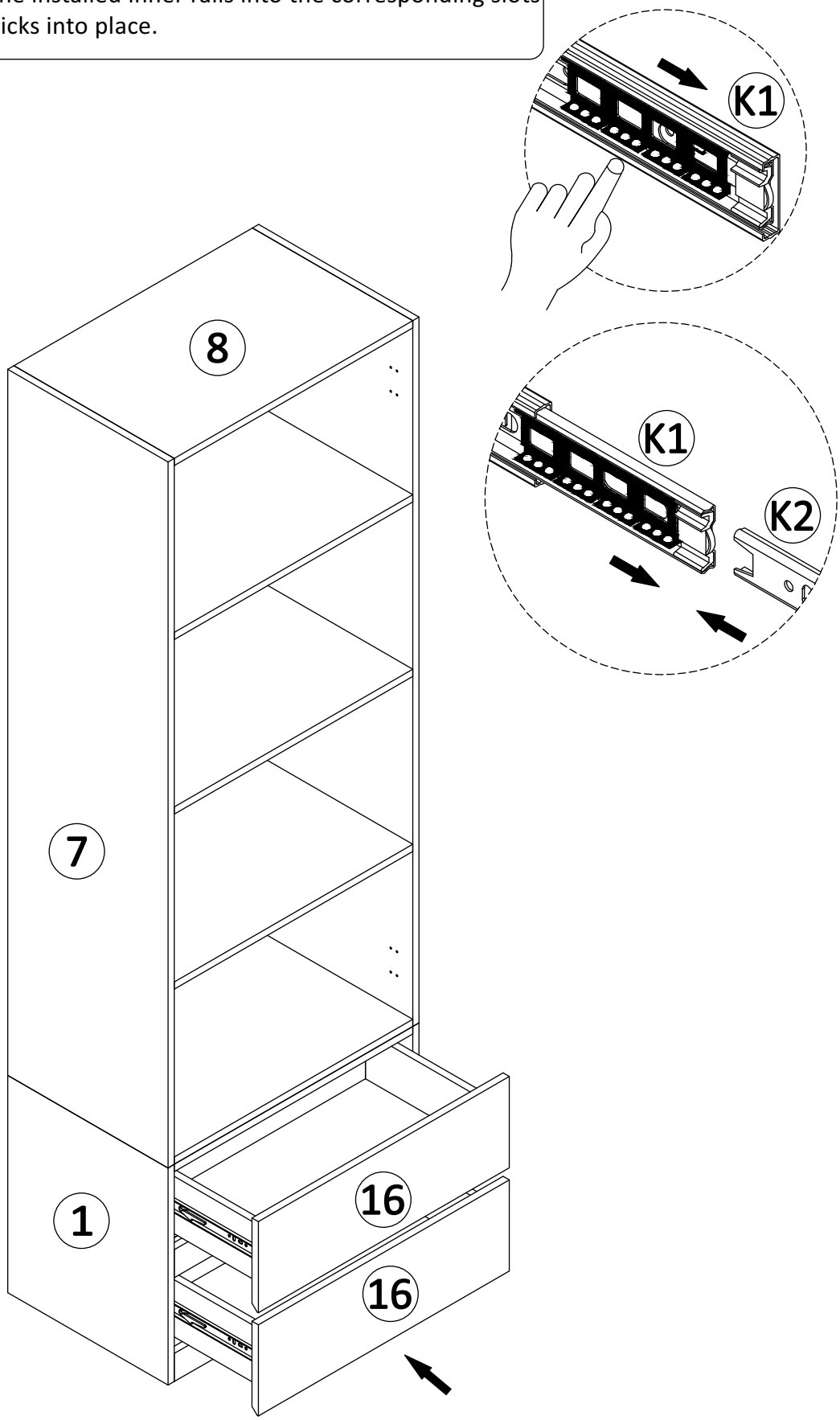

Install the panel 16 drawer assembly in the two positions shown in the diagram (note that the beveled edge should be facing down).

Step 18

Door Hinge Deformation Instruction



Before installing the door hinge, you need to take a small step to help the door hinge fit better into the door frame slot.

Step 19

1. Original Shape

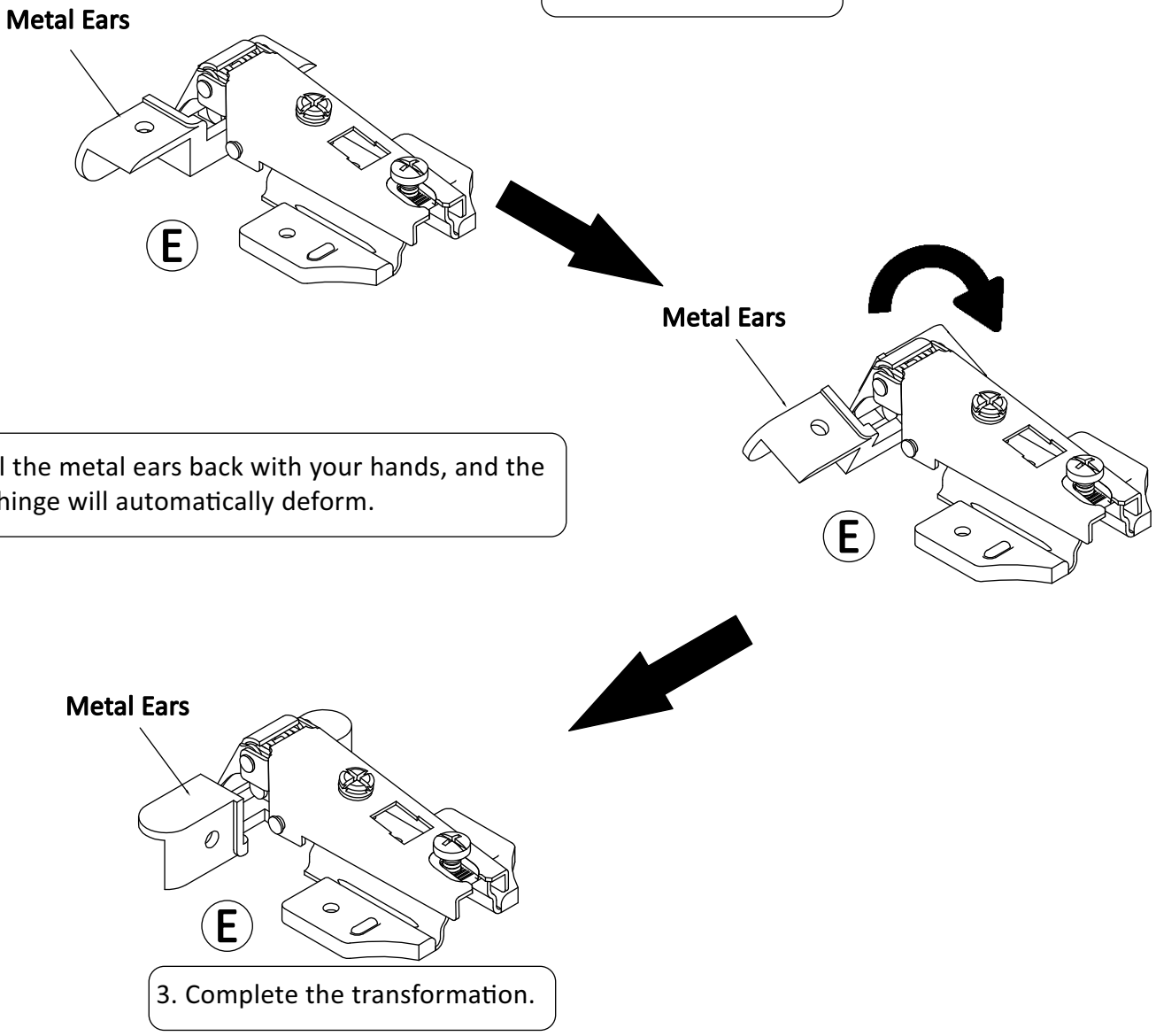

2. Pull the metal ears back with your hands, and the door hinge will automatically deform.

3. Complete the transformation.

Step 20

Orient the door hinges as shown before securing.

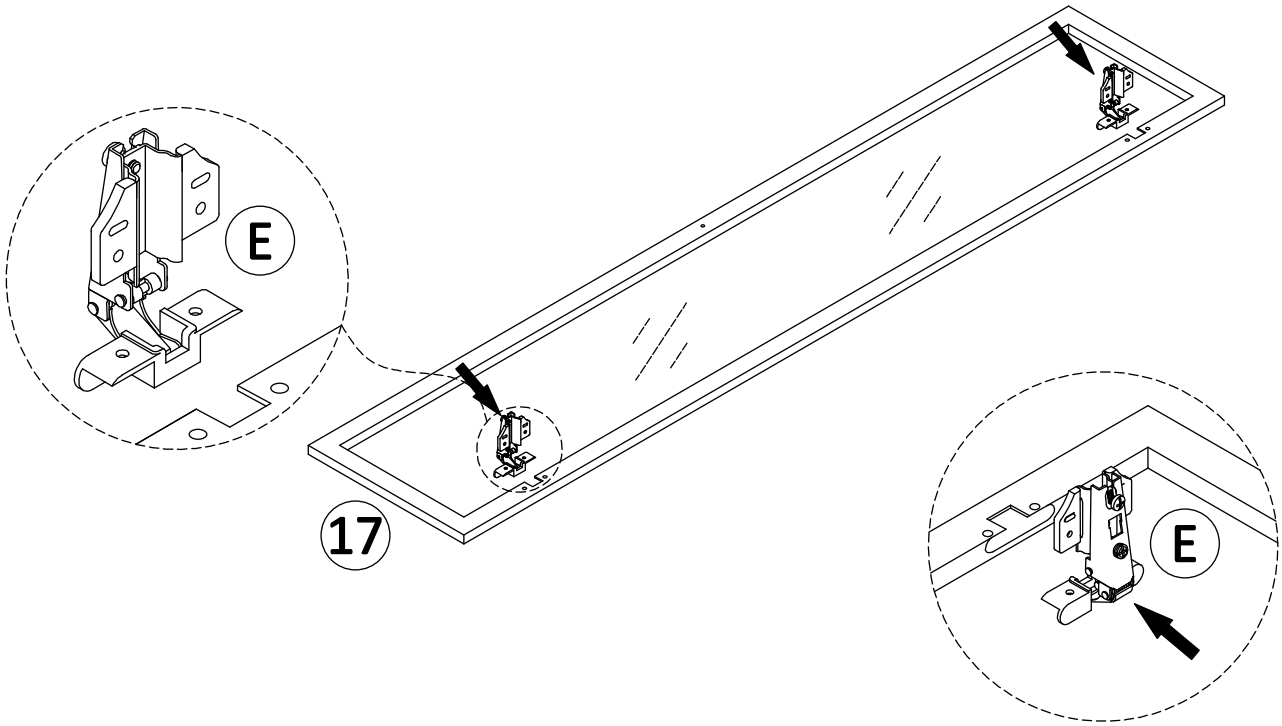

Step 21

Mount the door hinges to the designated positions on the glass door as illustrated.

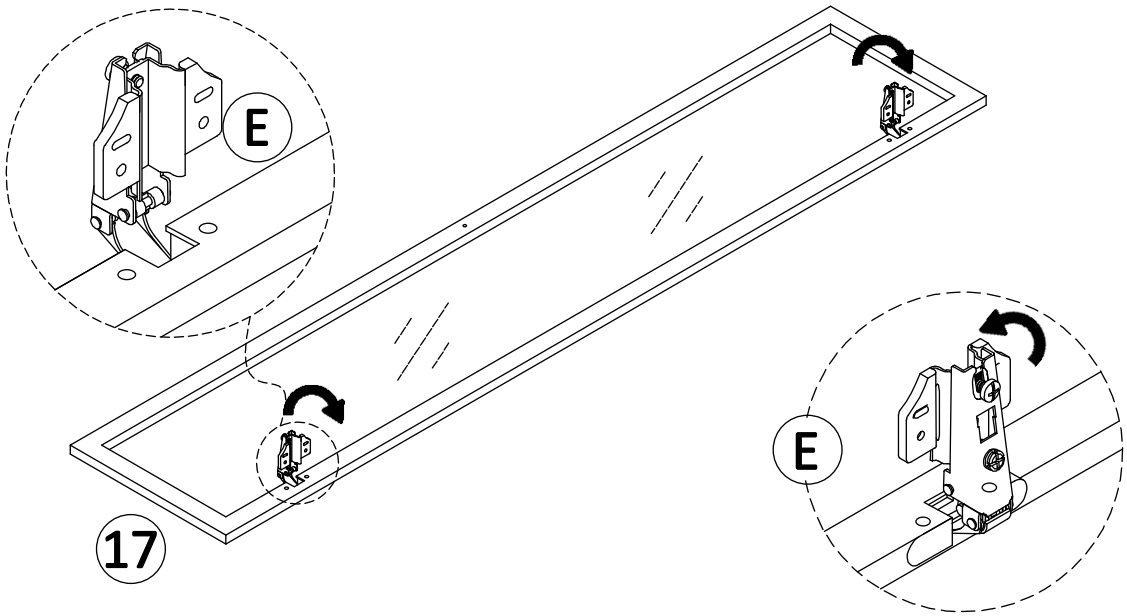

Step 22

Use the #E1 (screws) to attach the #E (hinge) to the designated position on the glass door. Then, use the #F (screws) to install the #D (door handle) onto the door.

F		X2
D	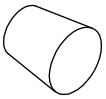	X2
E	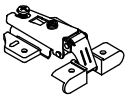	X4
E1		X8

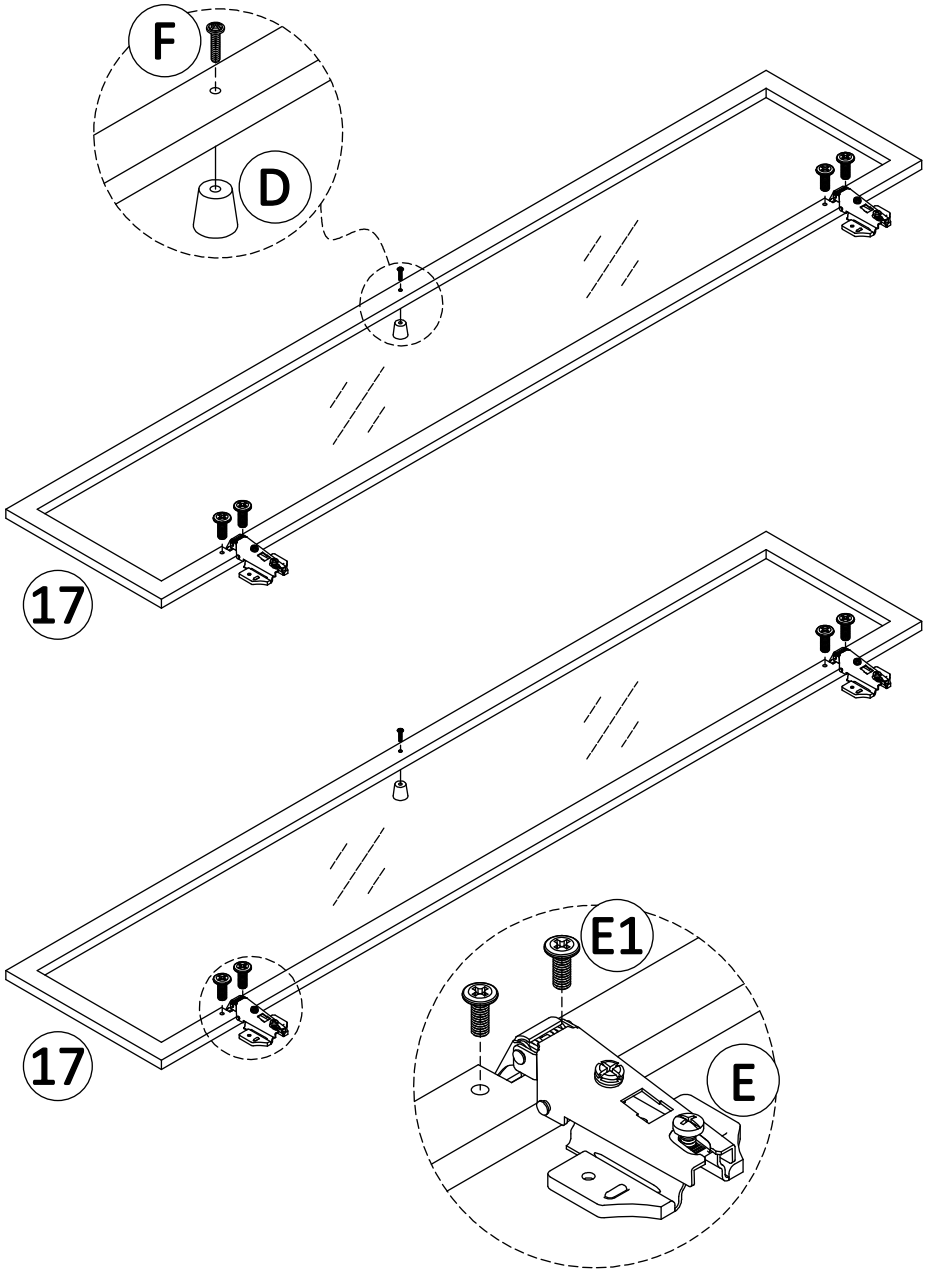

Step 23

E2 X16

Using #E2 (screws) attach the glass door with installed hinges to the cabinet body.

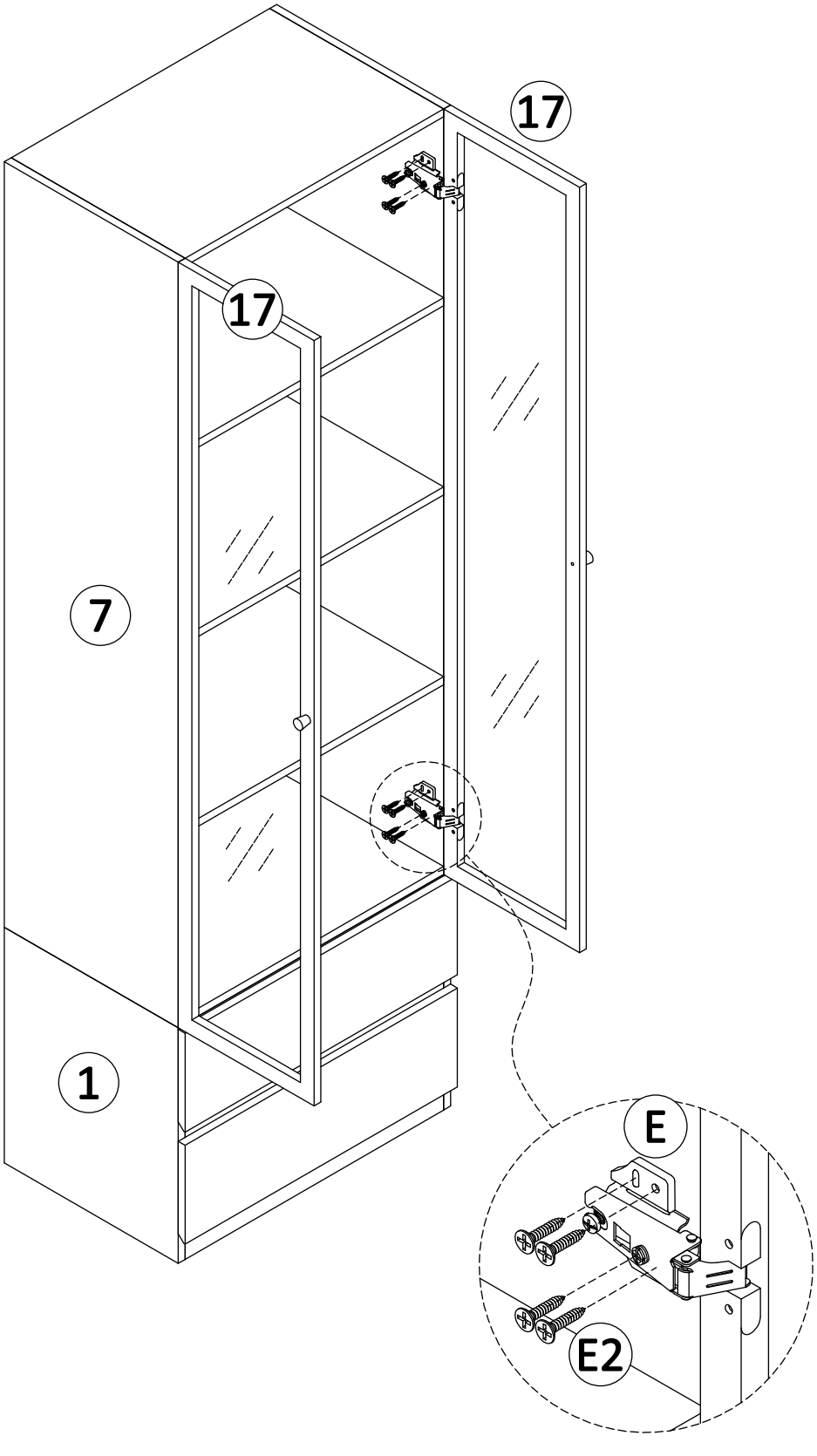

Step 24

Install the LED light strip inside the cabinet.

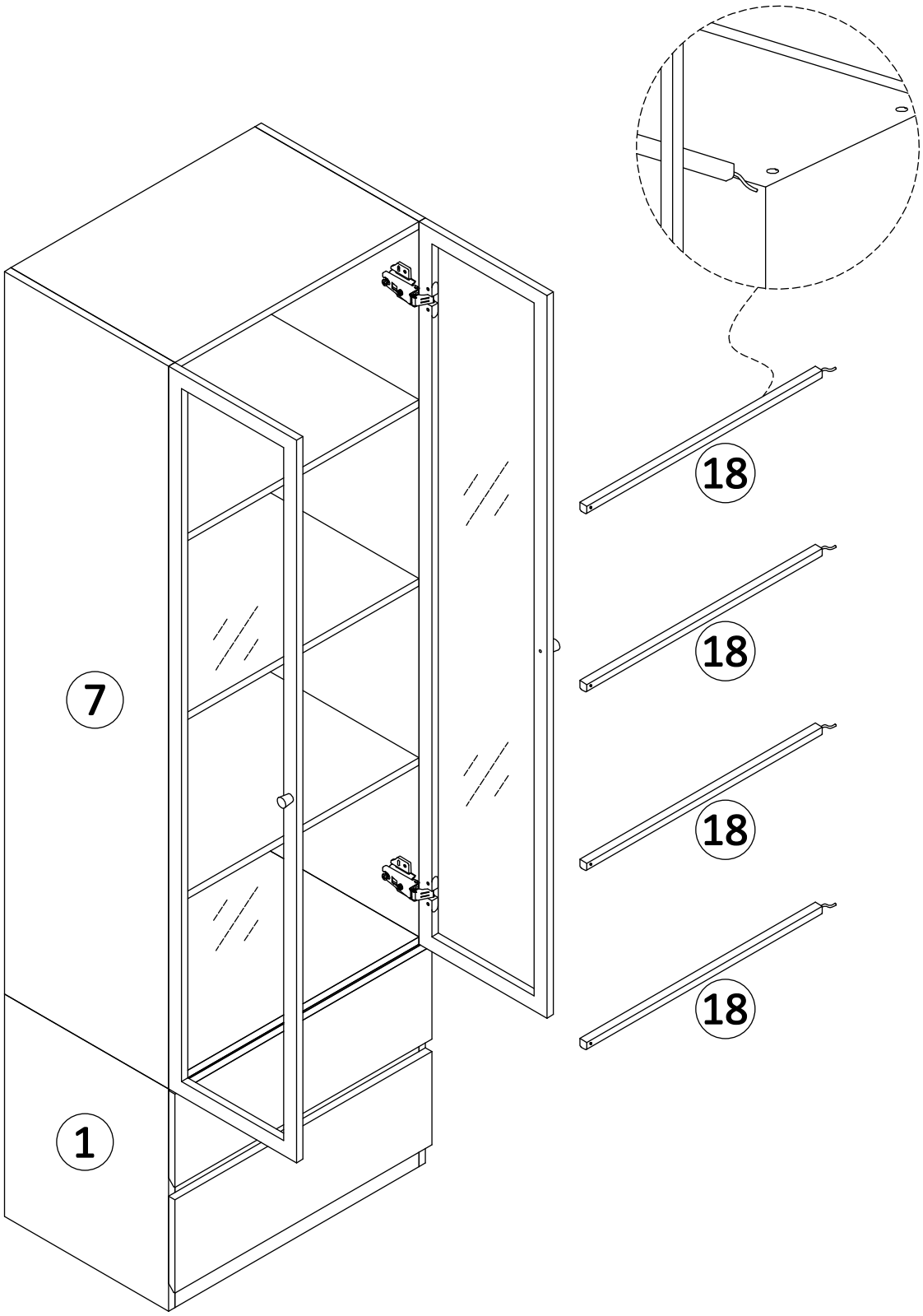

Step 25 (Optional) L- Accessory Installation Instructions

If you do not need to hold the display cabinet in place, skip this step and complete the installation. If you want the display cabinet to be more stable and prevent it from shifting due to impacts, please follow these steps.

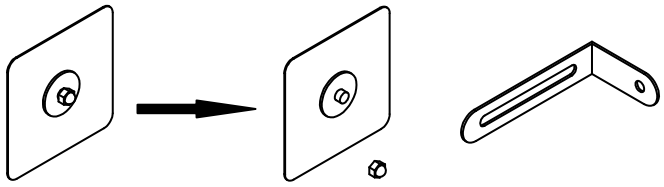

L1*2 L2*1

1.

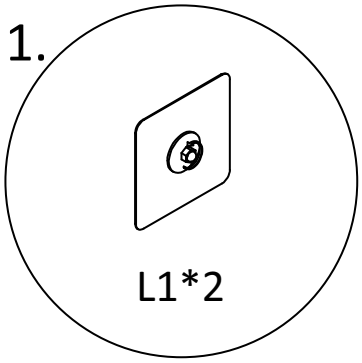

1: Unscrew the L1 screw.

2.

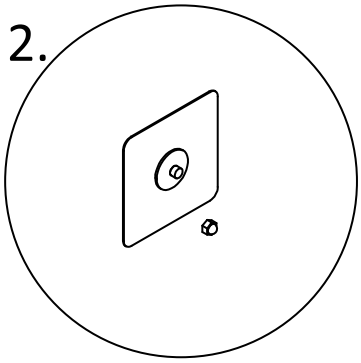

2: This allows L1 to separate from the screw.

3.

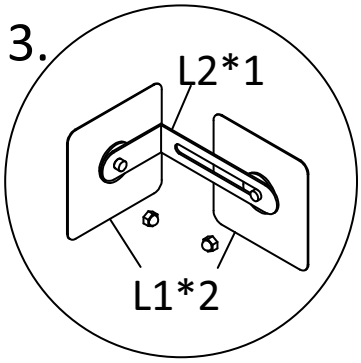

3: Insert L2 into L1.

4.

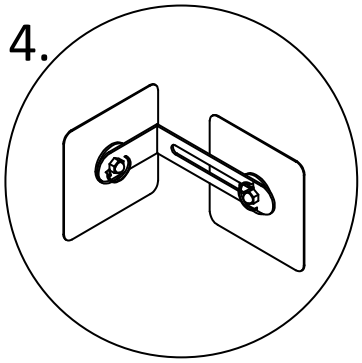

4: Screw in L1 and tighten.

5.

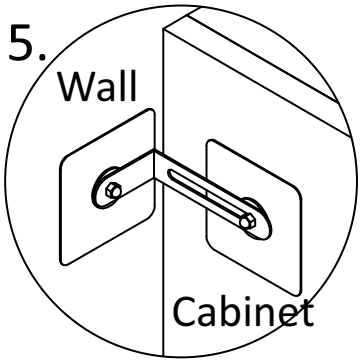

5: Mark the location of L1 on the wall and cabinet.

6.

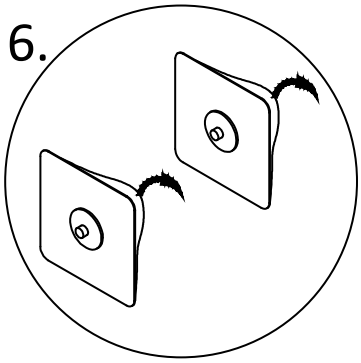

6: After marking, remove L2 and then peel off the sticker on L1.

7.

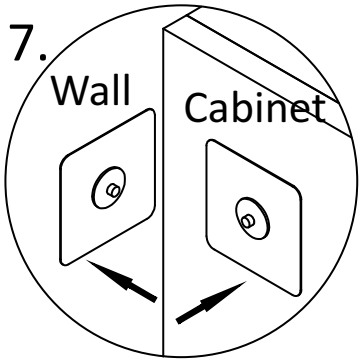

7: Stick L1 on the wall and cabinet.

8.

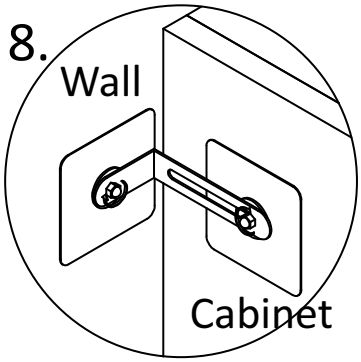

8: Insert L2 into L1. Then screw in the screws and tighten them.

9.

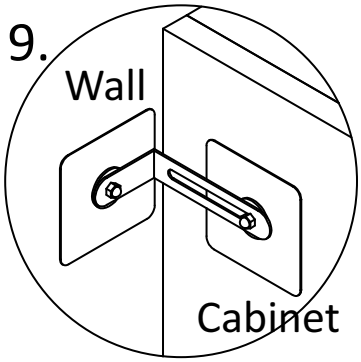

9: Installation complete.

Step 26 (Optional)

L  X3

Install the remaining #L (accessories) following the steps above. Note: Please determine the placement of the glass cabinet in advance.

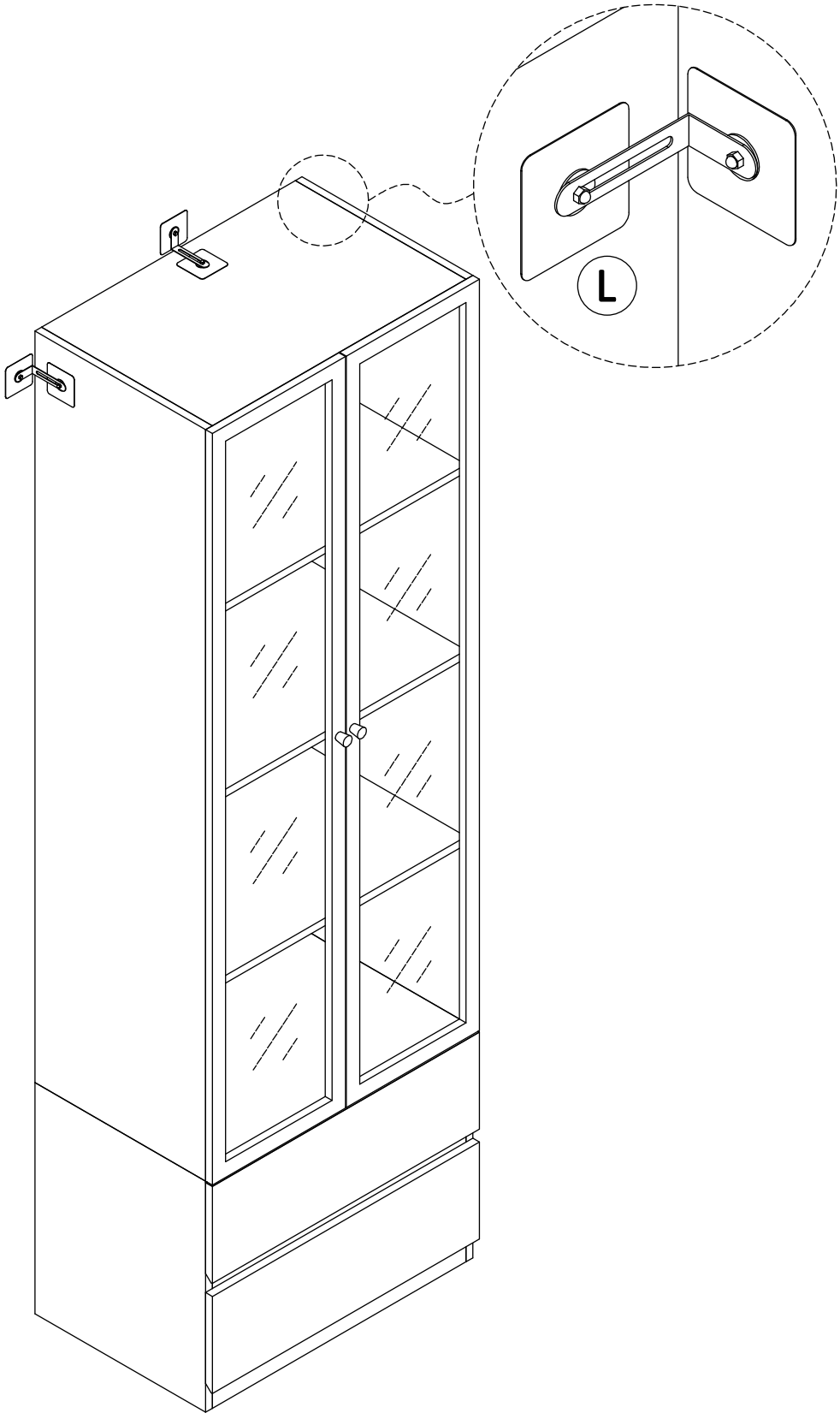

Assembly Completed

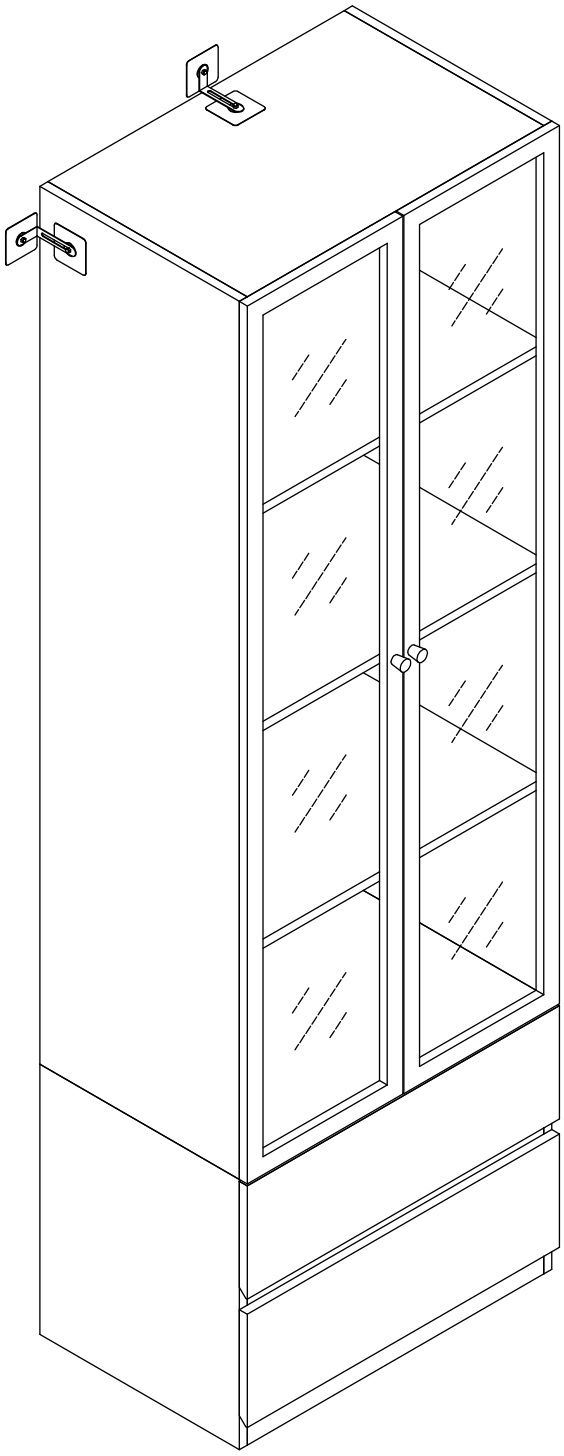

Use and Maintenance

1. Keep the furniture vacant for half a month before use, and maintain good indoor ventilation to eliminate the residual odor in furniture surface coating.

2. Place the objects smoothly, heavier objects should be placed at the bottom (layer) of the furniture to avoid the furniture from tipping over. Heavy objects should not be placed on the top of the wardrobe, so as not to cause the top plate to deform and sag and affect the opening of the cabinet door, high-temperature or frozen objects should be padded with high-termperature-resistant mats and placed on the furniture. Heavier or harder objects should be placed on the furniture table with a soft decorative tablecloth or a felt for protection.

3. Do not push hard objects directly on the furniture to avoid scratching the surface of the furniture.

4. Do not expose the furniture to sunlight for a long time or place the furniture close to the heating equipment, which can cause localized discoloration and fading.

5. Please avoid long-term exposure to humid environment to prevent mildew.

6. Place the furniture stably to avoid breaking the furniture feet or loosening the connection parts due to inclination.

7. Do not let items that are flammable and oxidizing touch the surface of the furniture, which may cause chemical reactions and damage to the furniture finishing.

8. Teach children not to play close to the glass sharp angles of furniture avoid accidental physical injury and damage to the furniture.

9. Open the doors and drawers of the furniture with appropriate force, and it is strictly for bidden to open and close them violently, which will cause loose connections.

10. Screws may become loose during long-term use. If necessary, retighten them to ensure stability and security.

Trouble Shooting

Product Category	Fault	Cause Analysis	Handing Method
Wood furniture	Door opening is not flexible	The furniture is not leveled	Use items to level the furniture
		The door hinges should be adjusted properly.	Adjust door hinges and apply lubricating oil
	Inflexible opening of drawer	Overload or deformation	Reduce weight, adjust guide rails, lubricate
	Loose component connection	Loose hinges or screws	The poke part should be coated with an appropriate amount of 502 glue, then re-install or tighten the screws.
	Minor scratches	Friction with hard or sharp objects	Use a brush to apply similar pigment ink along wood grain to the scratches, then wipe off the excess.
	Corrosive stains	Accidentally stained with chemical solvents such as nail polish, nail polish remover, etc.	Wipe them with a dry cotton cloth immediately

Possible issues during assembly:

- The two boards can't be aligned at the same level.

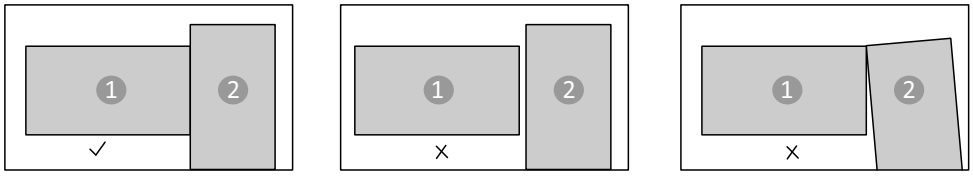

- Holes on the bards and poles are not aligned, so screws can't be installed.

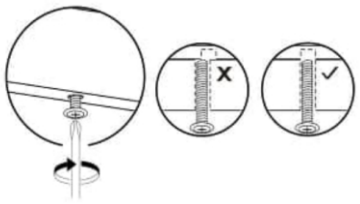

Recommended solution:

- Please sightly loosen all screws and adjust the bards. Because the diameter of the holes on the pipes 23 mm lager than that of bots, the position of the boards can be adjusted.

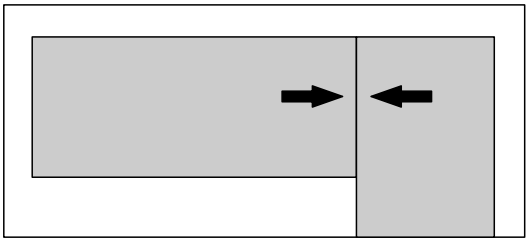

- It is still doesn't work after adjustment, please contact us for more solutions.

Special Accessories Installation Instructions

Hinge Adjustment Diagram

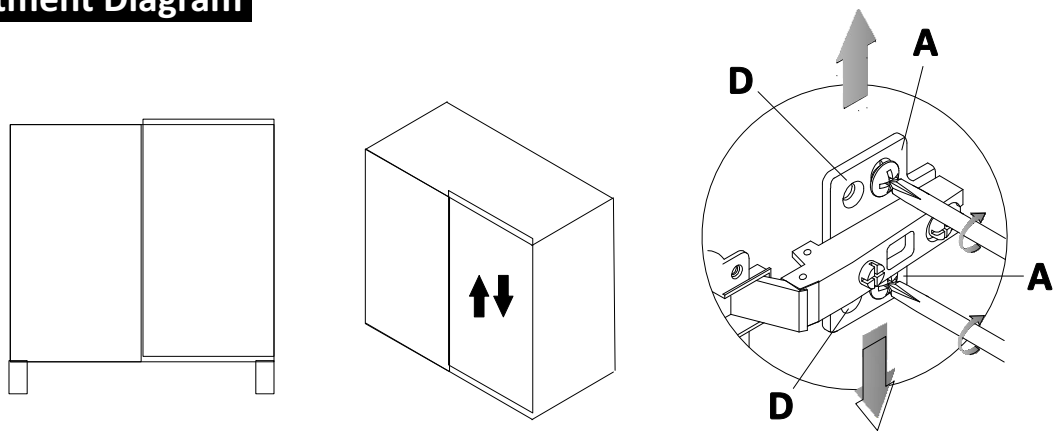

If the two doors are not vertically aligned:

Screw "A" on the hinge is the height adjustment knob. First, remove both screws "D", then loosen screw "A" and adjust the door height as needed. Once the position is correct, tighten screw "A". Adjusting the cabinet door height requires adjusting both the upper and lower hinges simultaneously.

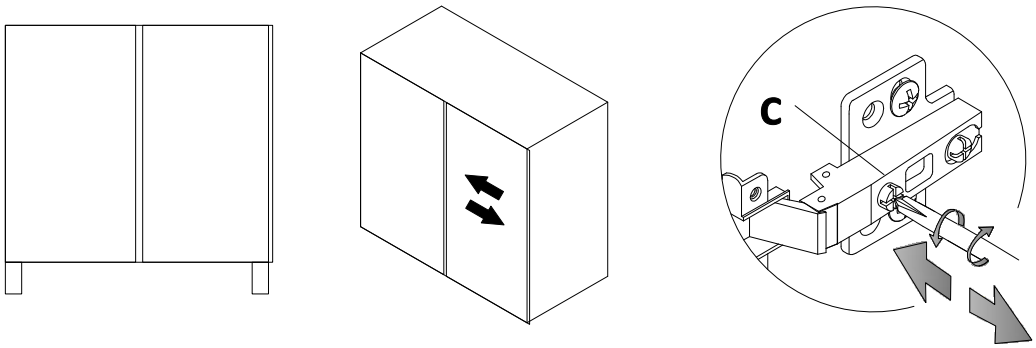

If there are gaps between the doors:

The screw "C" on the inside of the hinge is the left/right adjustment knob. Turning it clockwise will shift the door inwards, and turning it counter-clockwise will shift it outwards. The operation is the same for the upper and lower hinges.

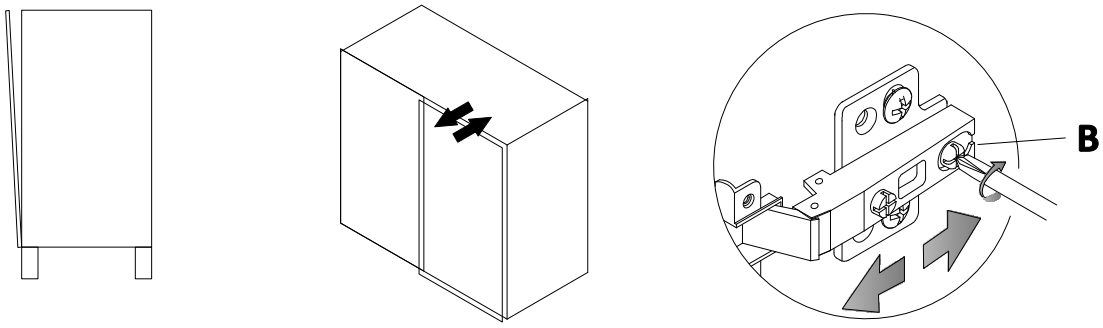

If the door cannot be fully closed:

The screw "B" on the outside of the hinge is the front-to-back adjustment knob. After loosening the screw, slide the cabinet door inwards and outwards to adjust the gap. Once the position is correct, tighten screw "B". The operation is the same for the upper and lower hinges.

How to use light strips

Product and Accessories Introduction

If you receive a well-packaged LED long light strip box, please check the number of accessories inside.

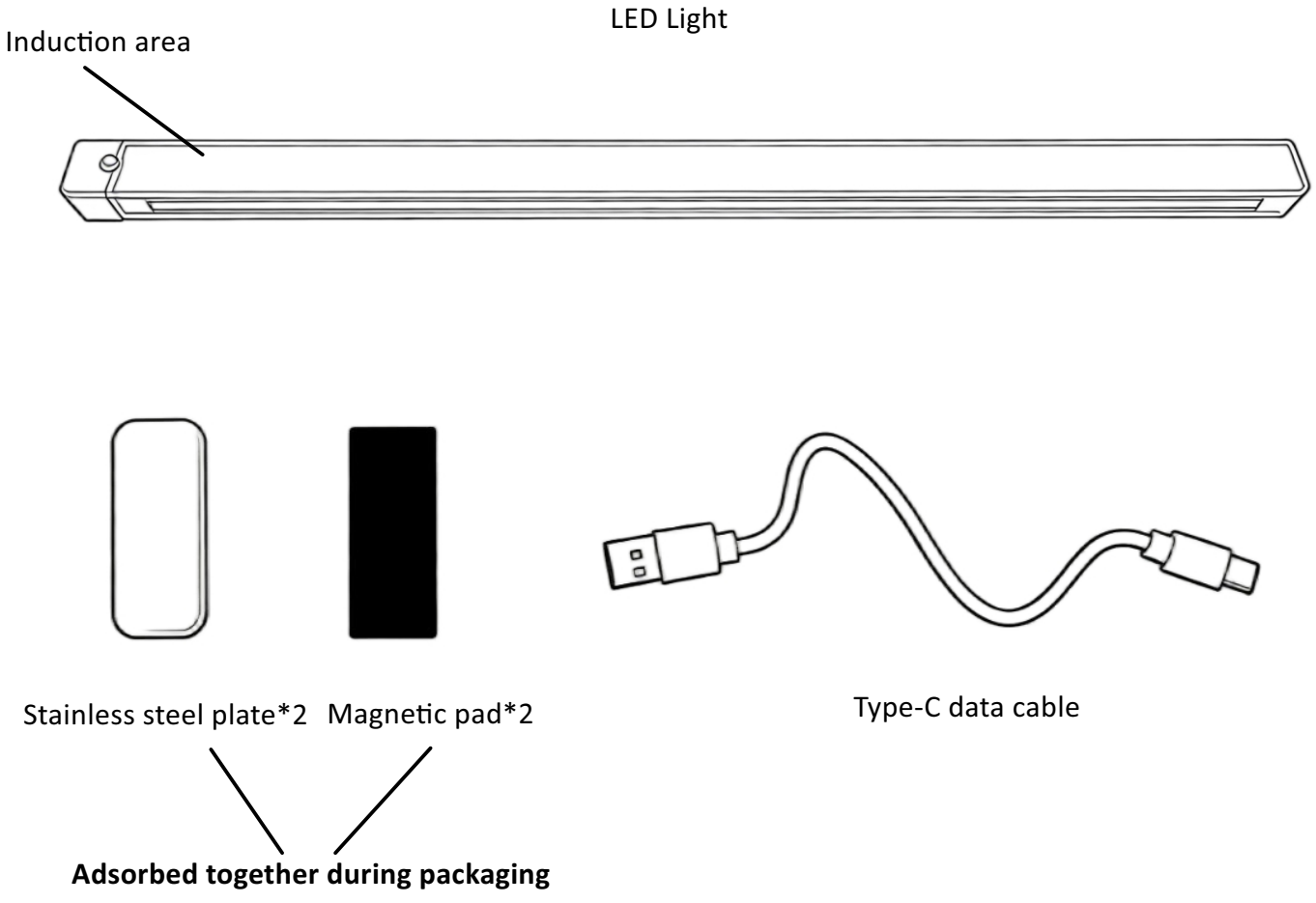

4 Light Modes & Operation Guide

Below are the four lighting modes for this light strip. All the operation buttons are the black switch on the side of the light strip.

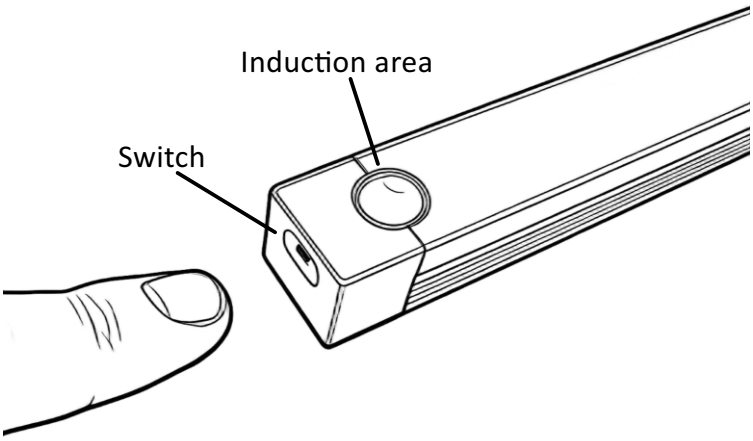

1. Steady on Mode

Press the switch light to "steady on mode".

2. Light-controlled Induction Mode

Press the switch once more in "Steady On Mode", and the light flashes three times for Light-controlled Induction Mode. This mode enables the light to trigger induction and emit light only in dark environments (e.g. night or dim places). And the light stays on for 60 seconds after activation.

3. No Light-controlled Induction Mode

Press the switch once more in ''Light-controlled Induction Mode'', and the light flashes twice for No Light controlled Induction Mode.

This mode allows the light to trigger induction and light up in any environment (day or night), and the light stays on for 60 seconds after activation.

4. OFF Mode

Press the switch once more in ''No Light-controlled Induction Mode'', The light turns off and stops working.

Tip: Adjust The Light Brightness

When the light is on, press and hold the switch to adjust the light brightness.

Installation Instructions

Please follow these steps to install the LED light strip. (Please keep the four small accessories safe before installation.)



Step 1:Tear off the stickers on the back of the magnetic sheets and adhere them to both sides of the back of the LED light.



Step 2:Tear off the sticker on the white side of the stainless steel plate, then attach the iron sheet on the blue side to the black magnet. After assembly, stick the entire strip to the desired position on the product (the installation position can be chosen as you like).

Installation Instructions

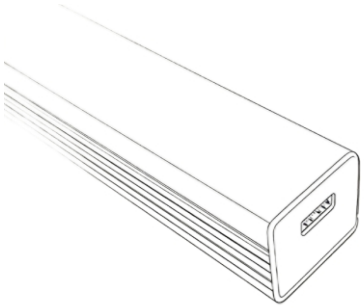



There is a Type-C port on the side of the LED light, and you can charge it with the included charging cable.

After-Sales Warranty

Dear Customer,

Thank you for purchasing this Glass Display Cabinet. If you find that the product is damaged or accessories are missing after receiving it, please contact us through our after-sales email. Our customer support team will provide you with a professional solution within 24 hours.

After-sales email: ATJafurn@outlook.com

If you encounter any problems with the product, accessories, installation, or damage after receiving your package, you can also scan this QR code to submit your issue and relevant pictures. This will allow us to quickly understand your difficulties and provide prompt replacement parts and professional guidance. We look forward to receiving any feedback from you!