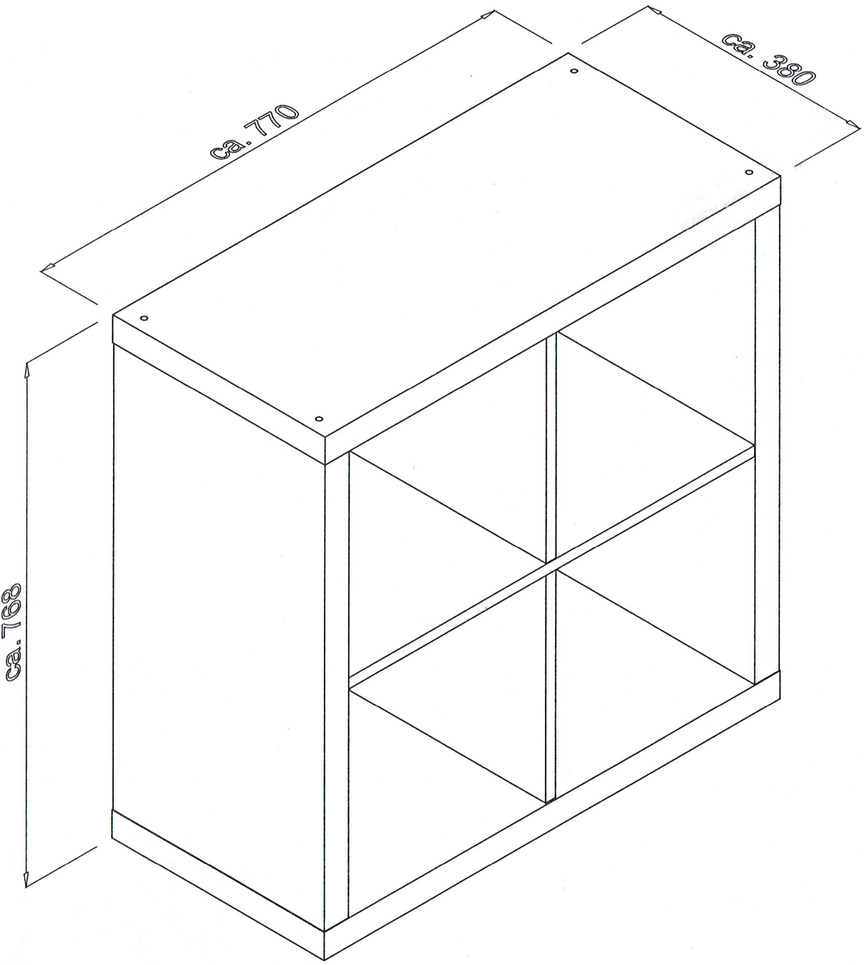

1	x2	ca. 770 x 380 x 40
2	x2	ca. 688 x 378 x 40
3	x2	ca. 336 x 374 x 16
4	x1	ca. 688 x 376 x 16

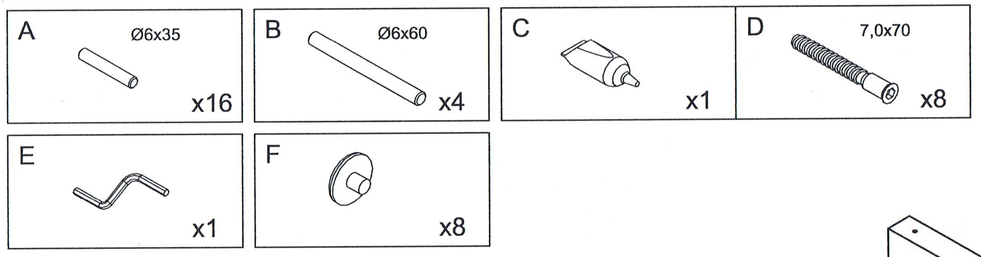

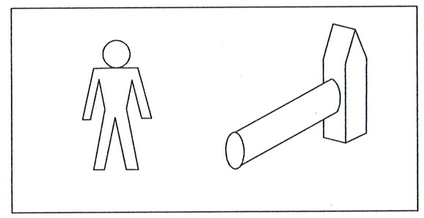

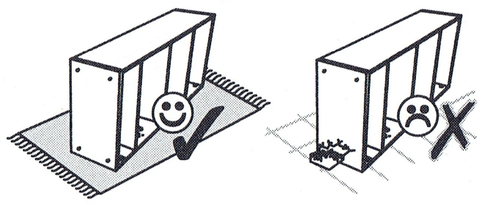

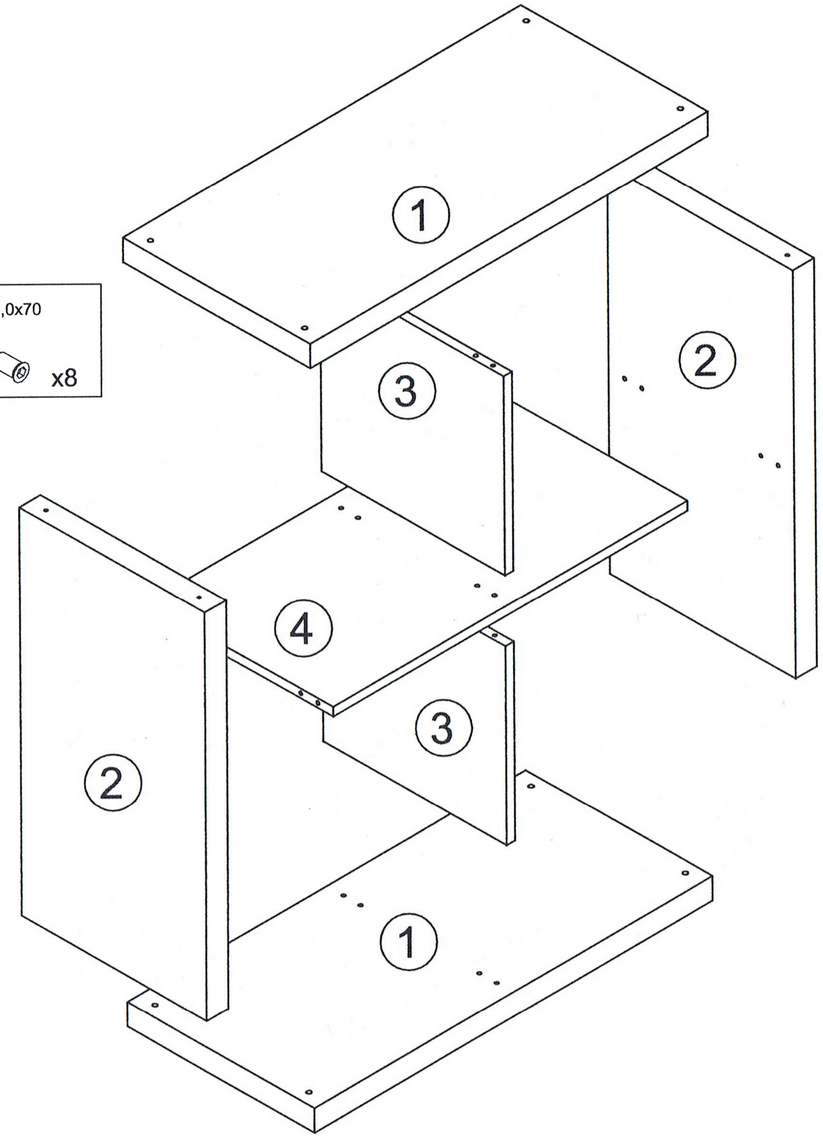

1

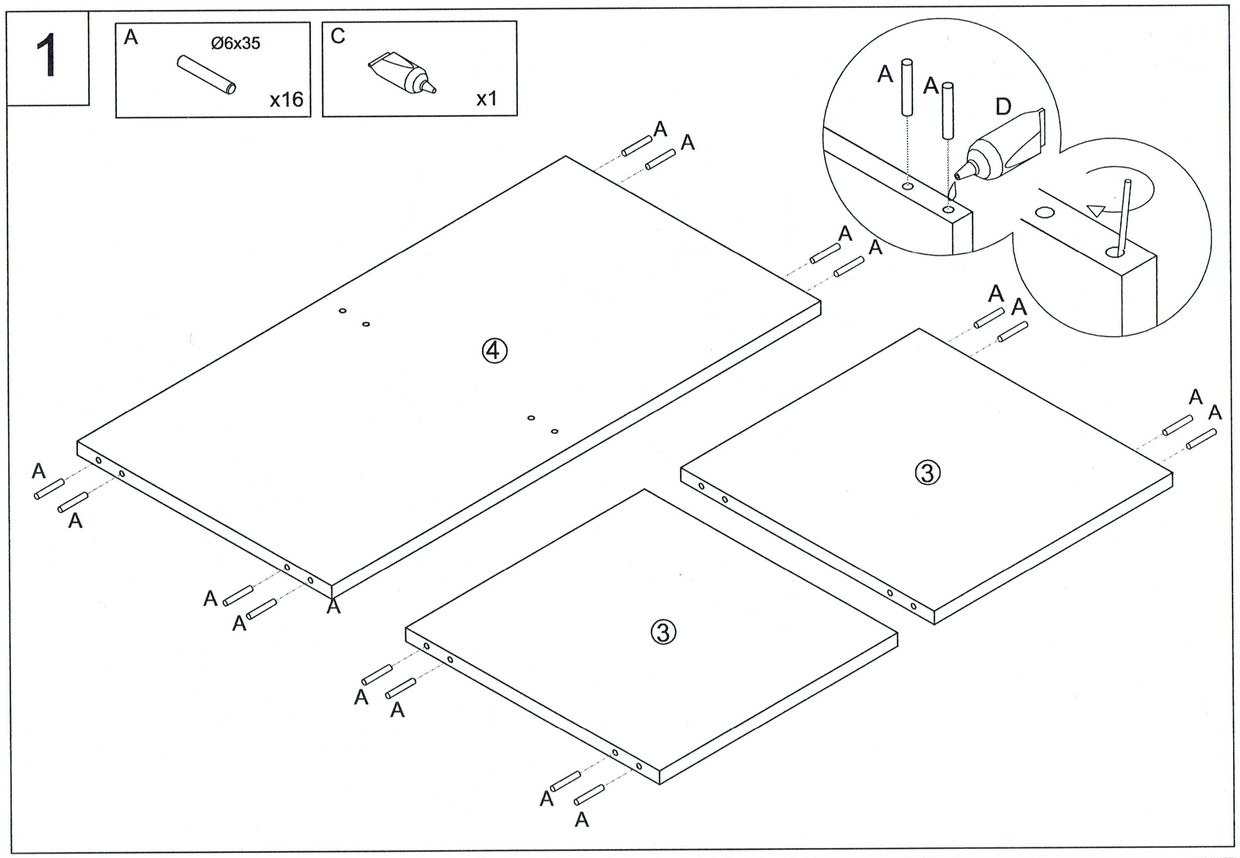
A
Ø6x35
x16
C
x1
A
A
D
④
③
③

2

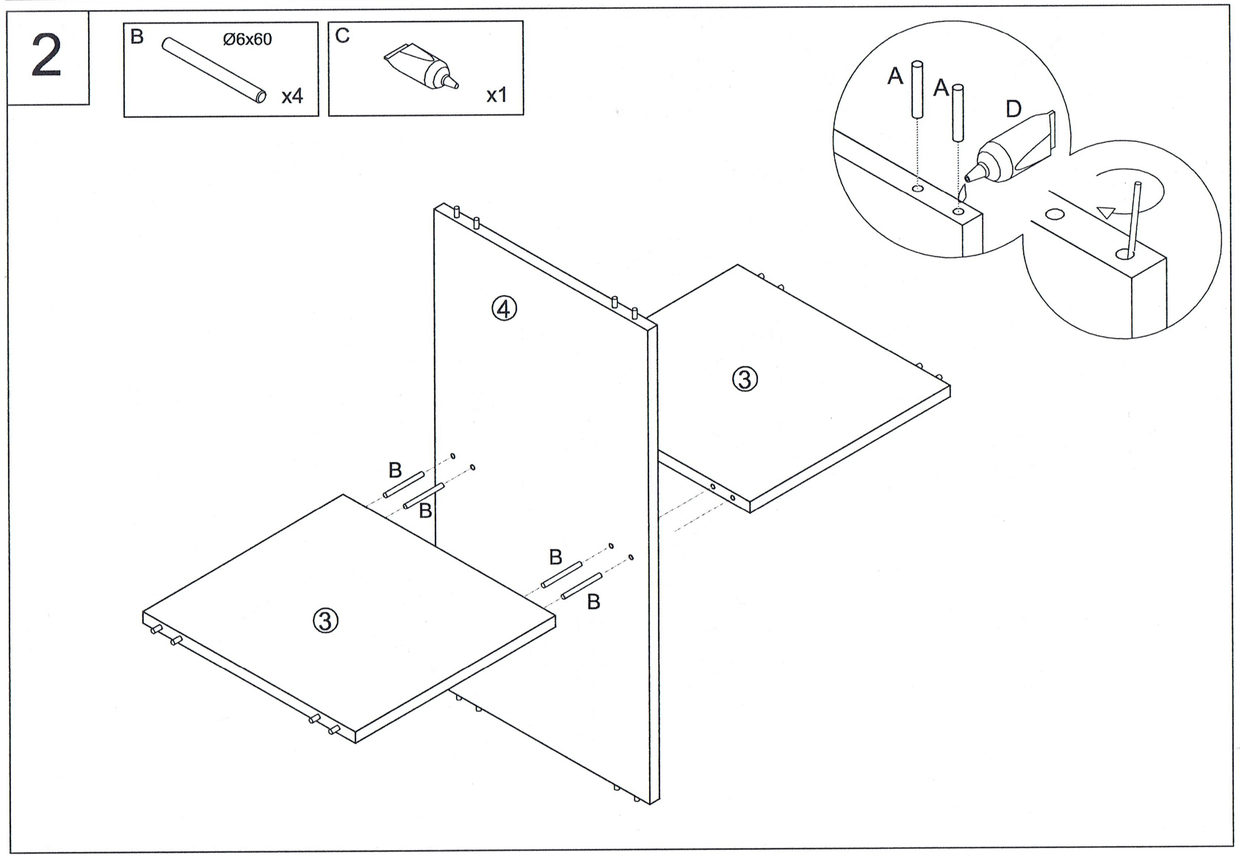
B
Ø6x60
x4
C
x1
A
A
D
④
③
③
B

3

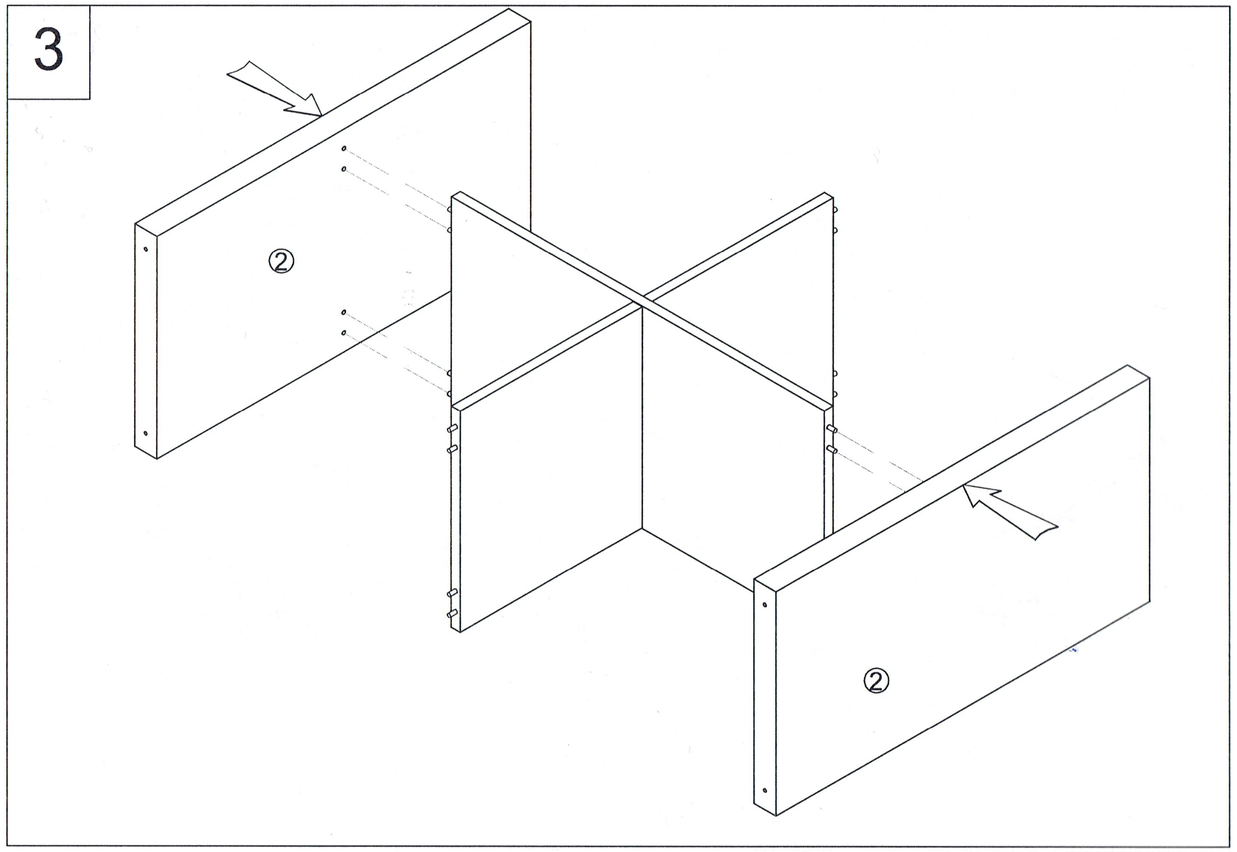
②
②

4

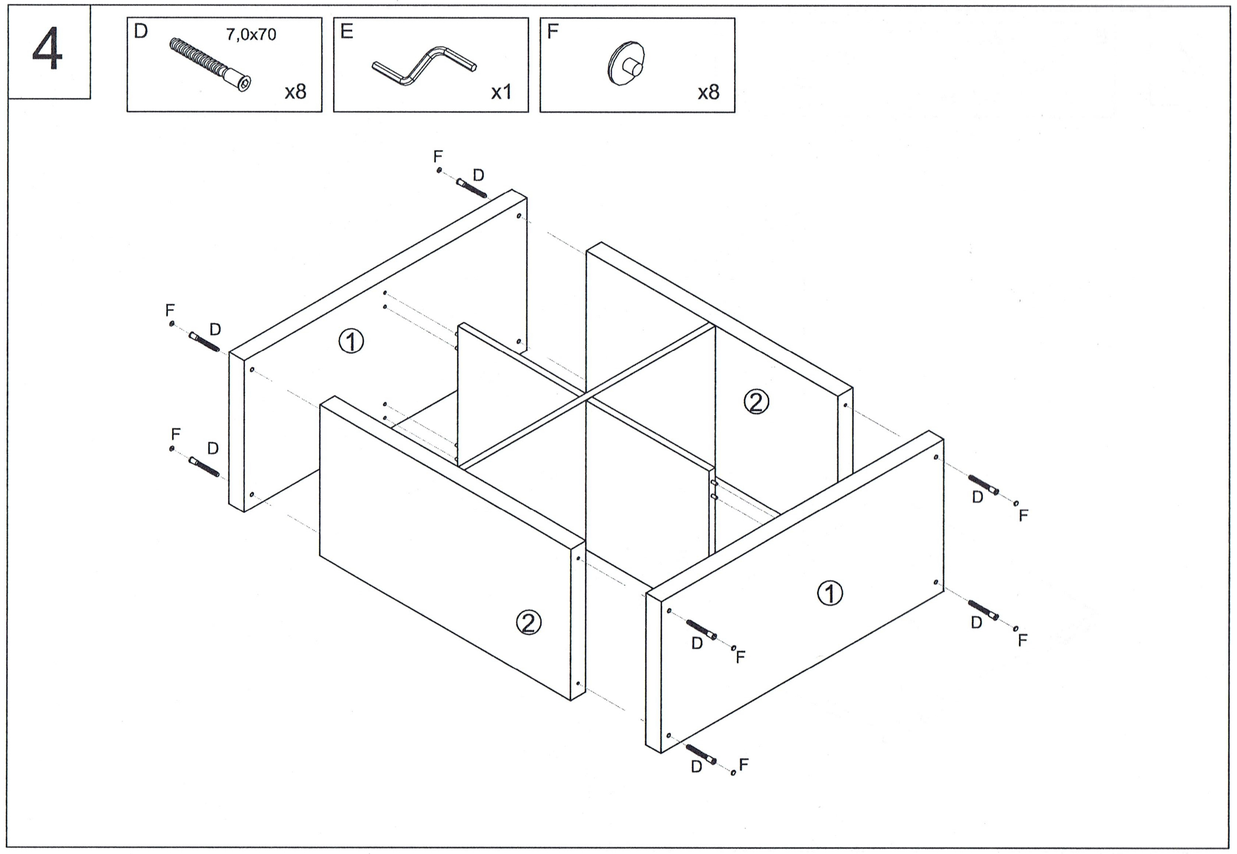
D
7,0x70
x8
E
x1
F
x8
F
D
①
②
②
①