Owner Manual

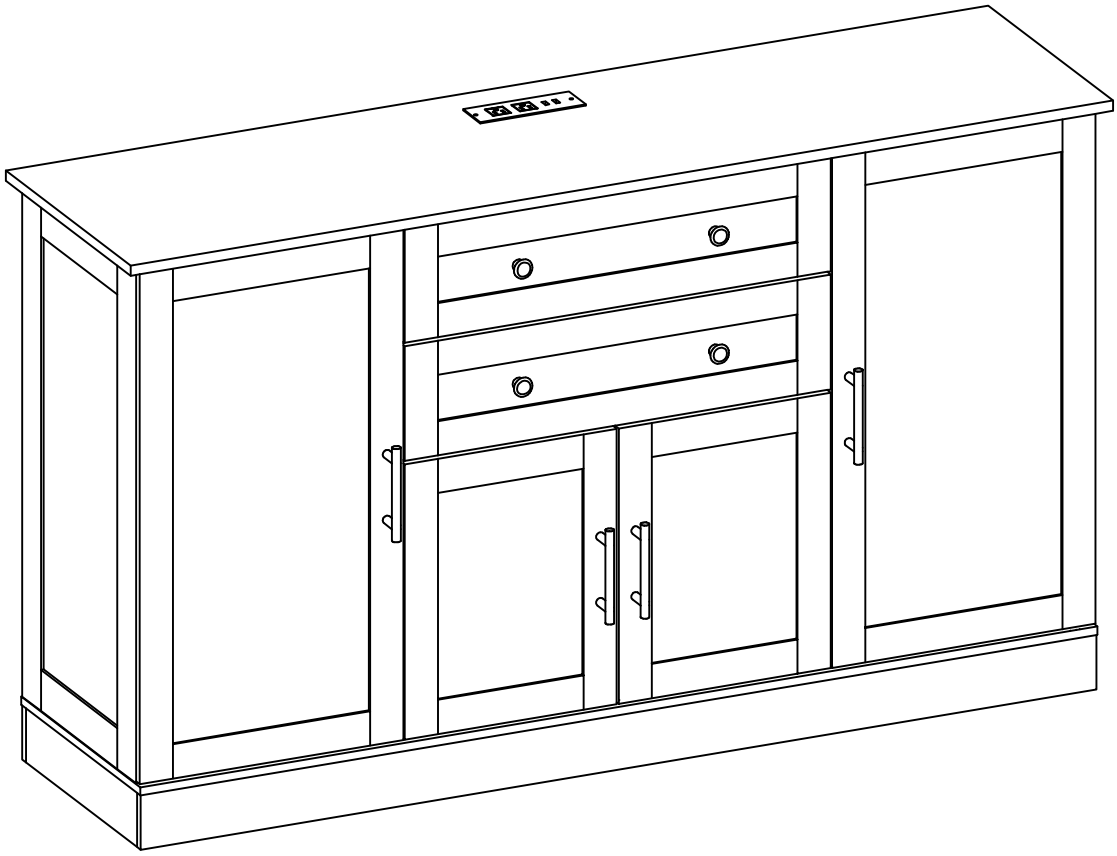

WARNING	AVERTISSEMENT
CSU This product is NOT a Clothing Storage Unit (CSU). DO NOT use it for clothing storage. Improper use may cause furniture tipover.	CSU Ce produit N'EST PAS une unité de rangement pour vêtements (CSU). NE l'utilisez PAS pour le rangement de vêtements. Une utilisation impropre peut entraîner un basculement des meubles.

1.Note:This is not clothing storage cabinet and it is not recommended to use it as a clothing storage cabinet.
2.All cabinets come with TRO,stainless steel or our "L-Bracket"when shipped.

1. Thank you for choosing ***our products.***

2. Return Policy

DO NOT RETURN TO THE STORE! Skip the process of returning your product and contact us directly for a replacement

If you find that parts of your order are missing or damaged, we will gladly ship any needed replacement parts free of charge.

If your product's quality does not meet your expectations or you have found any sort of defect, please contact our customer service department and let us know the details of your order and any issues encountered, we will try our best to provide you with a solution. Feel free to also directly contact our manufacturer concerning needed replacement parts and they will be happy to help provide you with a solution or answer any questions you may have.

Recommendations Before Beginning Assembly

- Read instructions, cover to cover
- Have 2-4 adults on hand for assembly depending on product size
- Do not assemble directly on flooring or carpet
- Assemble on a clean non-marring surface (example: packing foam)
- Save all packaging until finished

3. Assembly Notice:

- If you encounter any problems during assembly and find that you cannot continue, rest assured we will help you solve the situation as soon as possible. Simply keep all of the parts of the product stored in a safe place and contact us immediately so we may assist you further.
- Once you have opened your package, remove all inner hardware packages and take the parts out. One by one, Place the parts out neatly in front of you, then refer to the instructions to ensure no parts are missing. If any pieces are found missing, please carefully look in the box first, as the hardware packaging might have torn making the

hardware spill in the box.

- Some key parts of your product may be stored and hidden inside of other parts. Please open any zippered or hook & loop storage compartments to remove all parts. (example: cushions and legs being stored in the underside of a sofa)
- IMPORTANT: When setting up your product, DO NOT INSTALL THE SCREWS ALL THE WAY IN THE BEGINNING. Place each screw into their proper hole and use your hand to twist the screw halfway. Twist all the screws in halfway to ensure the holes will match up properly and the product is level on the ground. When everything seems fitted, then tighten the screws.
- When you have completed assembly, we suggest you have more than one person to assist you with lifting and placing the product.

Care & Maintenance

- Do not put hot items directly on furniture surface
- Do not clean furniture with harsh cleansers or polish
- Do not place furniture under direct sunlight
- Do not place furniture near heating or cooling vents
- Do not write on furniture without a padded barrier to protect the surface
- Do not place furniture outside. For indoor use only
- Not for commercial use. For residential use only
- Stains may be removed with mild soap solution and damp cloth
- Children should not climb or jump on the furniture
- Dust and pick-up spills using a clean, non-colored, lint-free cloth

Caution

● This product contains small components. Please ensure that they are kept away from small children.

● Do not use power tools to assemble your furniture. Power tools may strip or damage the parts.

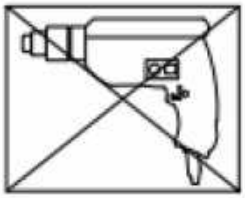

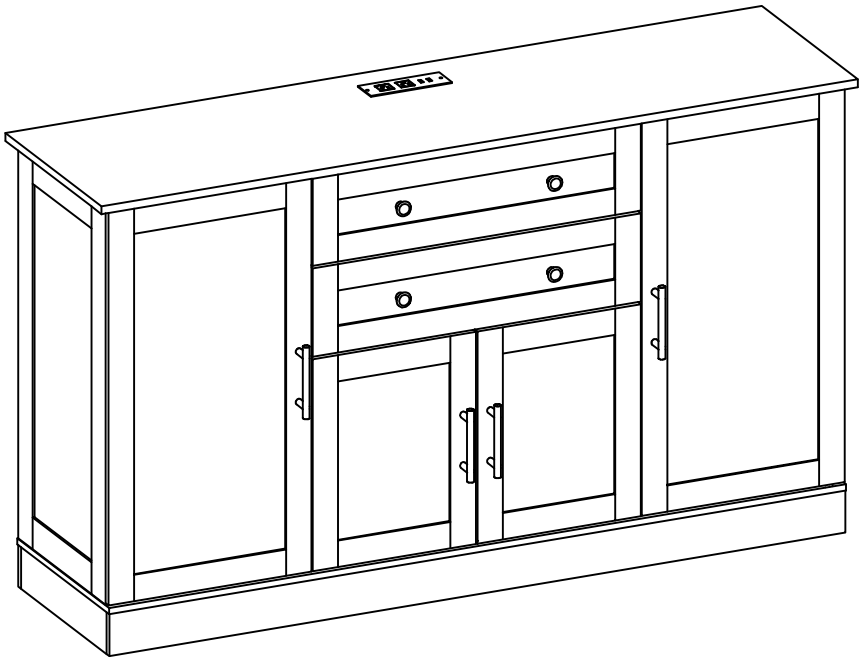

Part List

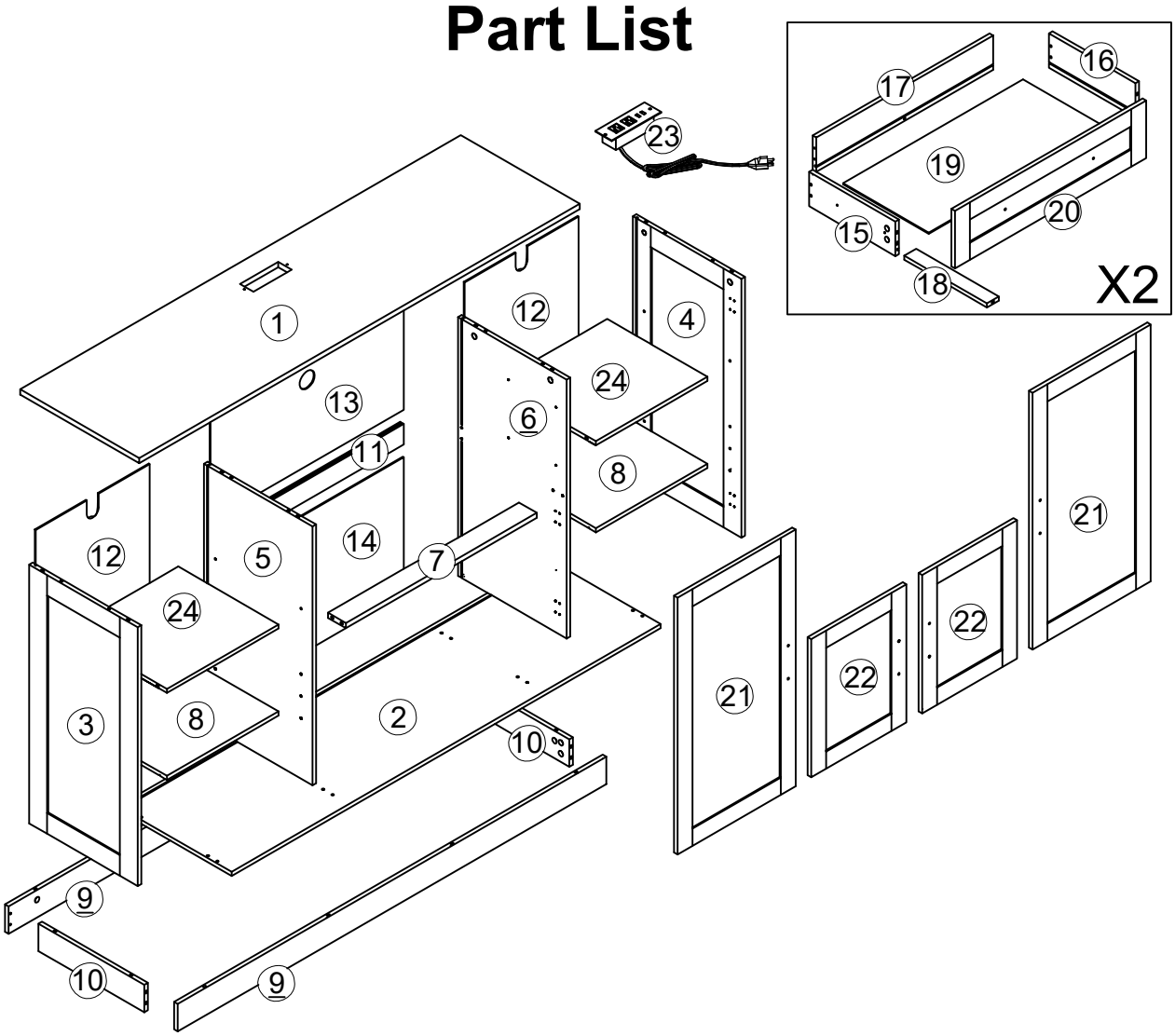

1 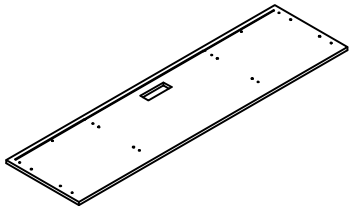 X1PC	2 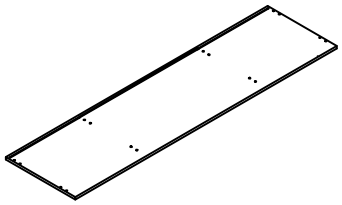 X1PC	3 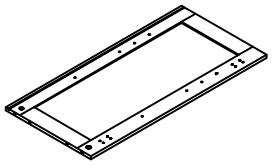 X1PC
4 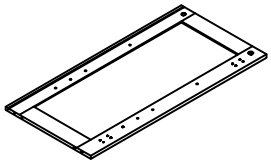 X1PC	5 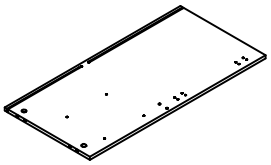 X1PC	6 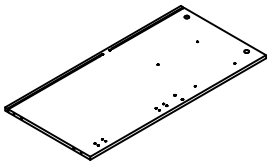 X1PC
7 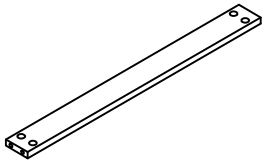 X1PC	8 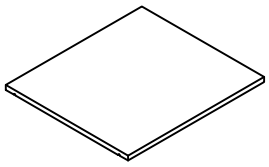 X2PCS	9 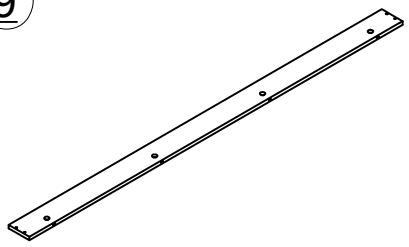 X2PCS
10 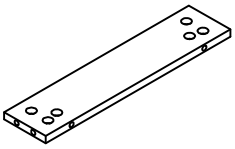 X2PCS	11 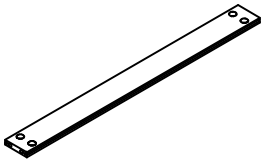 X1PC	12 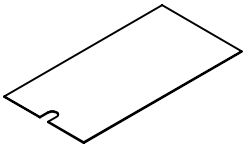 X2PCS
13 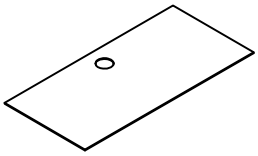 X1PC	14 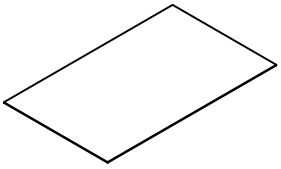 X1PC	15 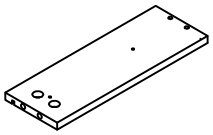 X2PCS
16 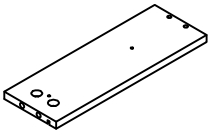 X2PCS	17 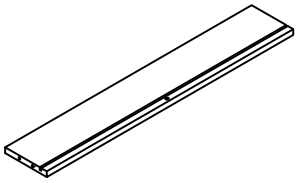 X2PCS	18 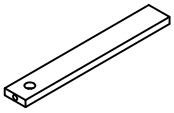 X2PCS

19 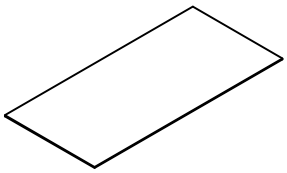 X2PCS	20 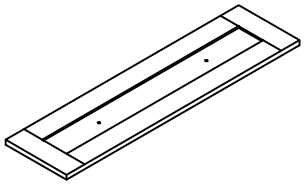 X2PCS	21 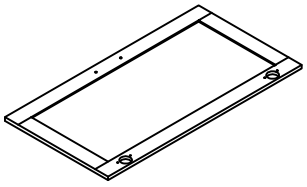 X2PCS
22 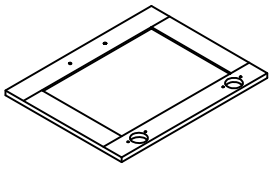 X2PCS	23 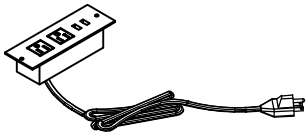 X1PC	24 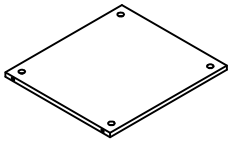 X2PCS

A	B	C	D	E	F
X54	X54	X16	X18	X66	X4
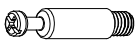		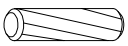			
Ø6*35mm	Ø15*9.5mm	Ø6*30mm	Ø5*40mm	Ø3.5*12mm	M4*8mm

G	H	I	J	K	L
X8	X4	X4	X4	X16	X8
			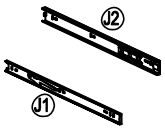	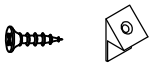	
M4*16mm			300mm	Ø3*16mm	

M	N	O	P
X4	X2	X4	X1
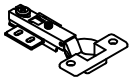	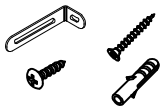	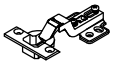	
	Ø4*12&Ø6*30&Ø4*35mm		S4

Step1

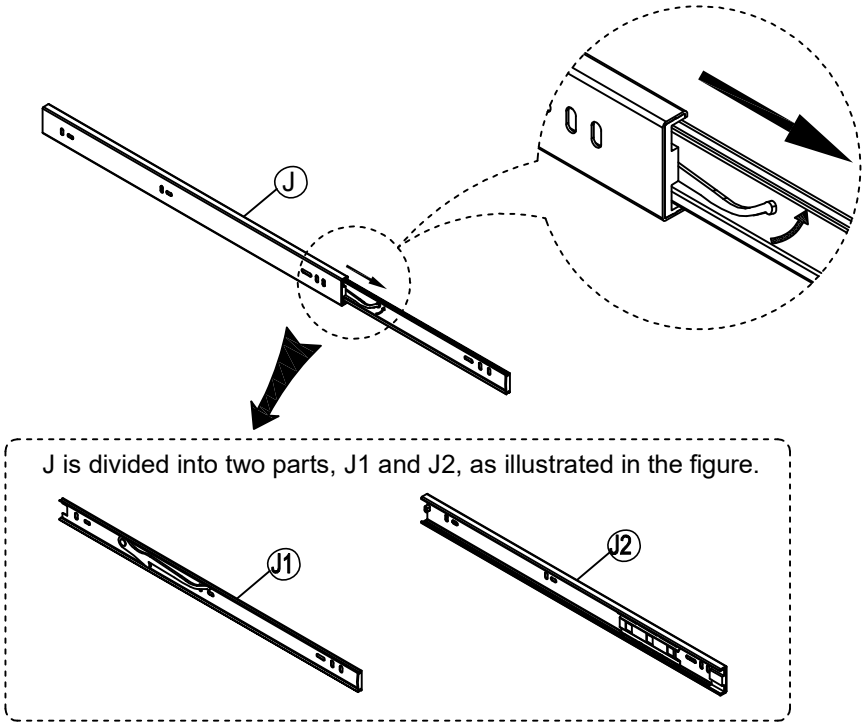

J	X4
300mm	

Step2

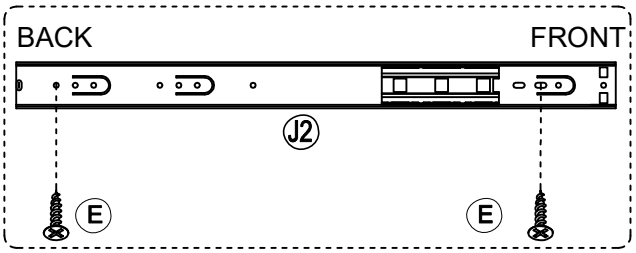

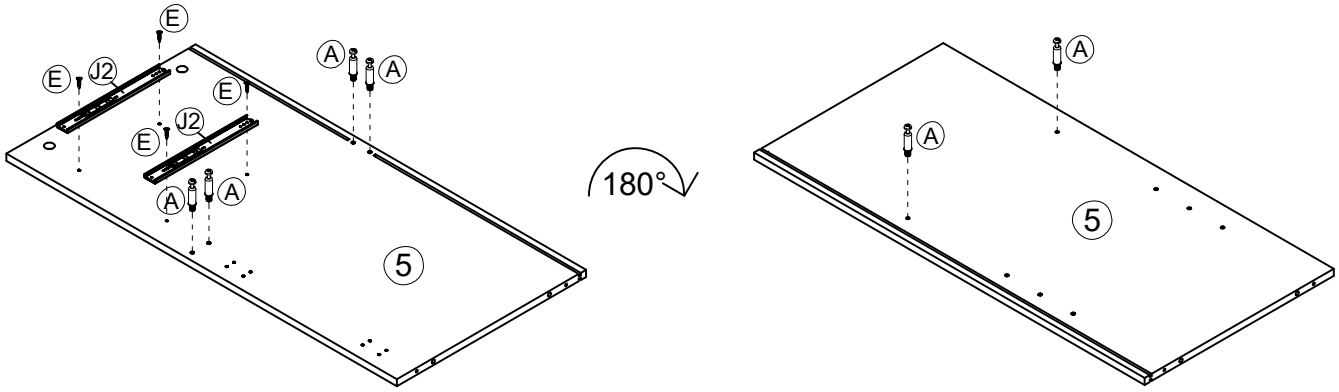

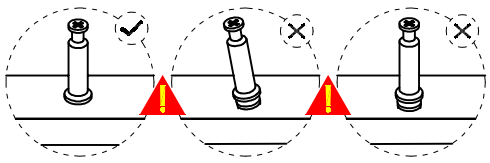

J	X2	E	X4	A	X6
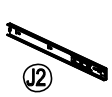					
300mm		Ø3.5*12mm		Ø6*35mm	

Step3

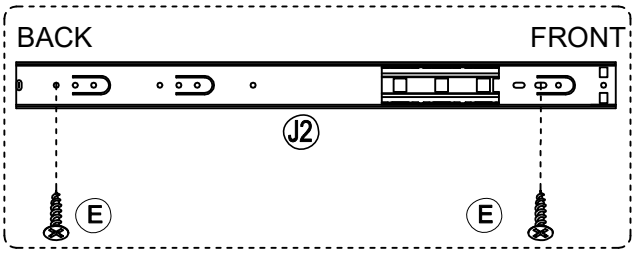

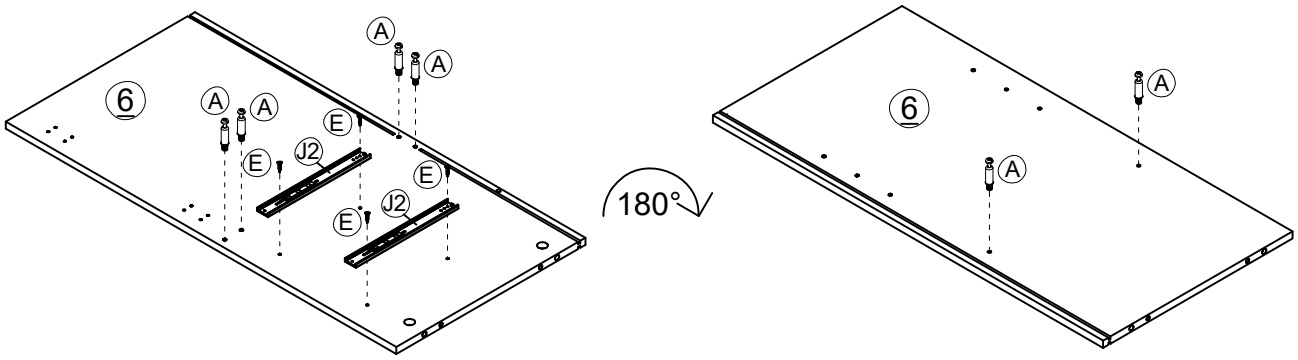

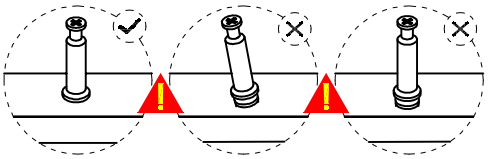

J	X2	E	X4	A	X6
300mm		Ø3.5*12mm		Ø6*35mm	

Step4

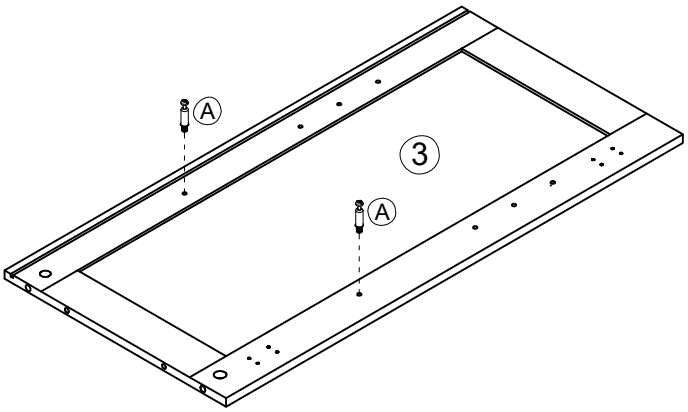

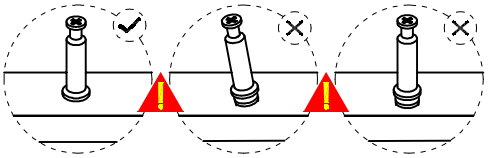

A	X2
Ø6*35mm	

Step5

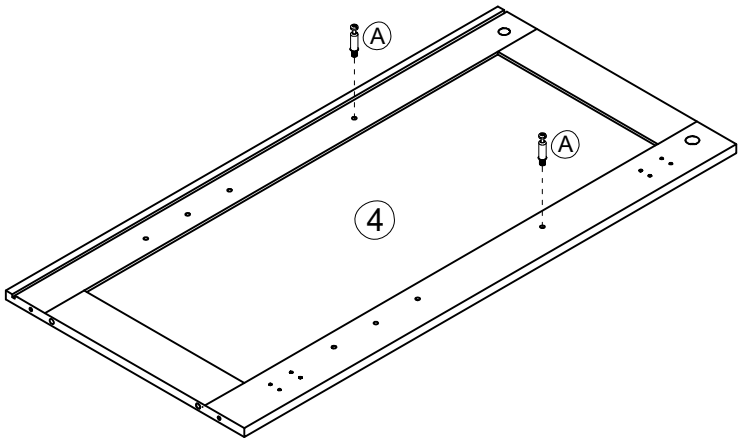

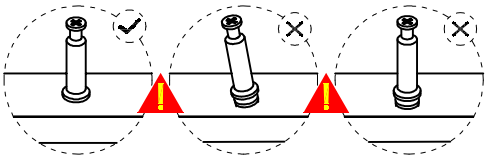

A	X2
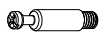	
Ø6*35mm	

Step6

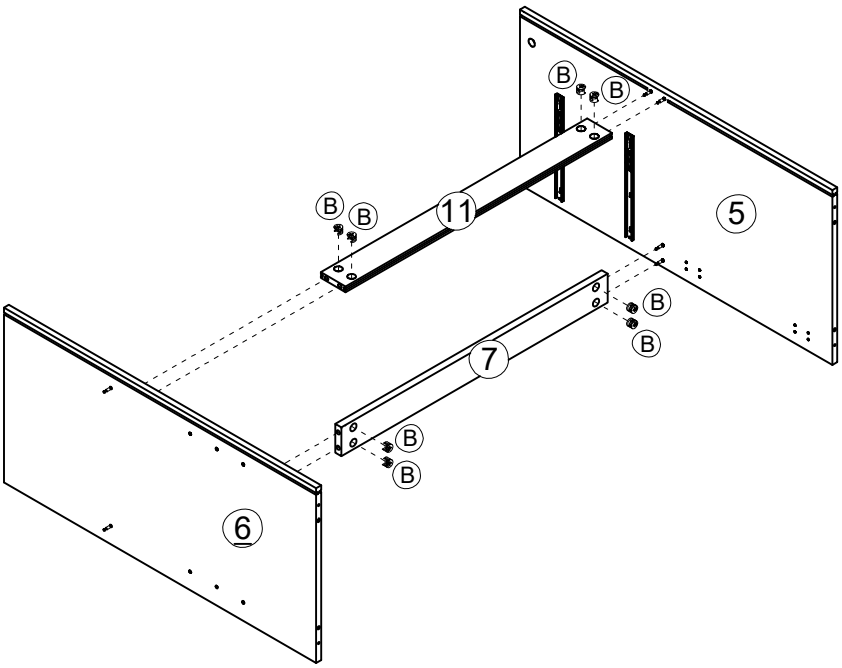

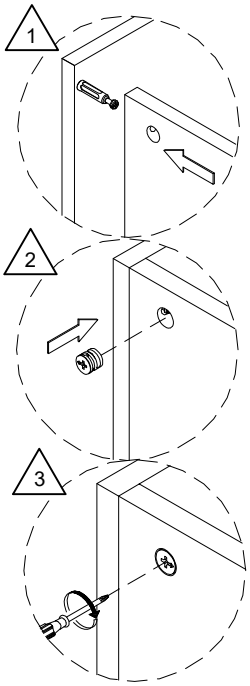

B	X8
Ø15*9.5mm	

Step7

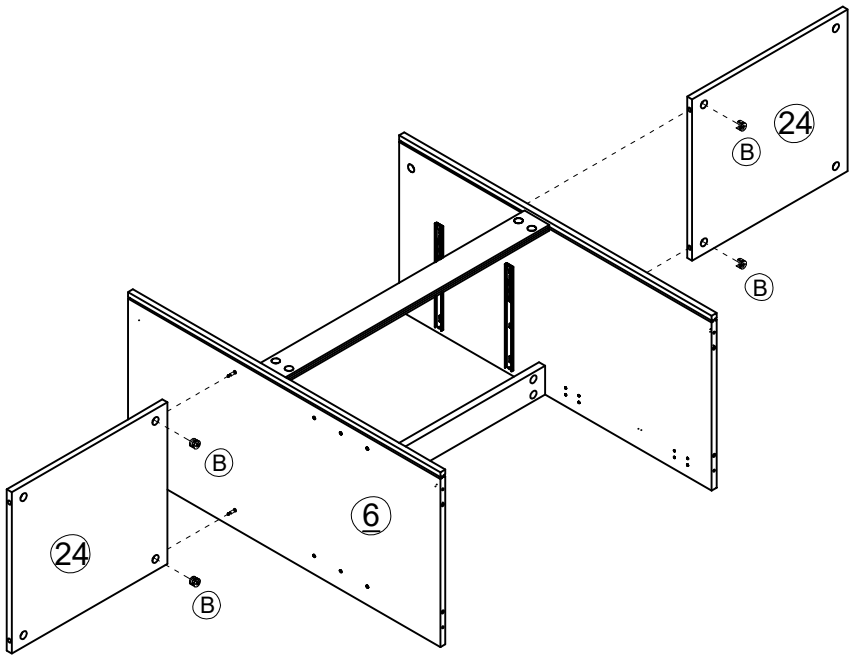

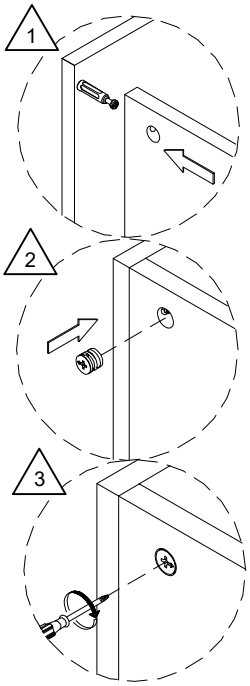

B	X4
Ø15*9.5mm	

Step8

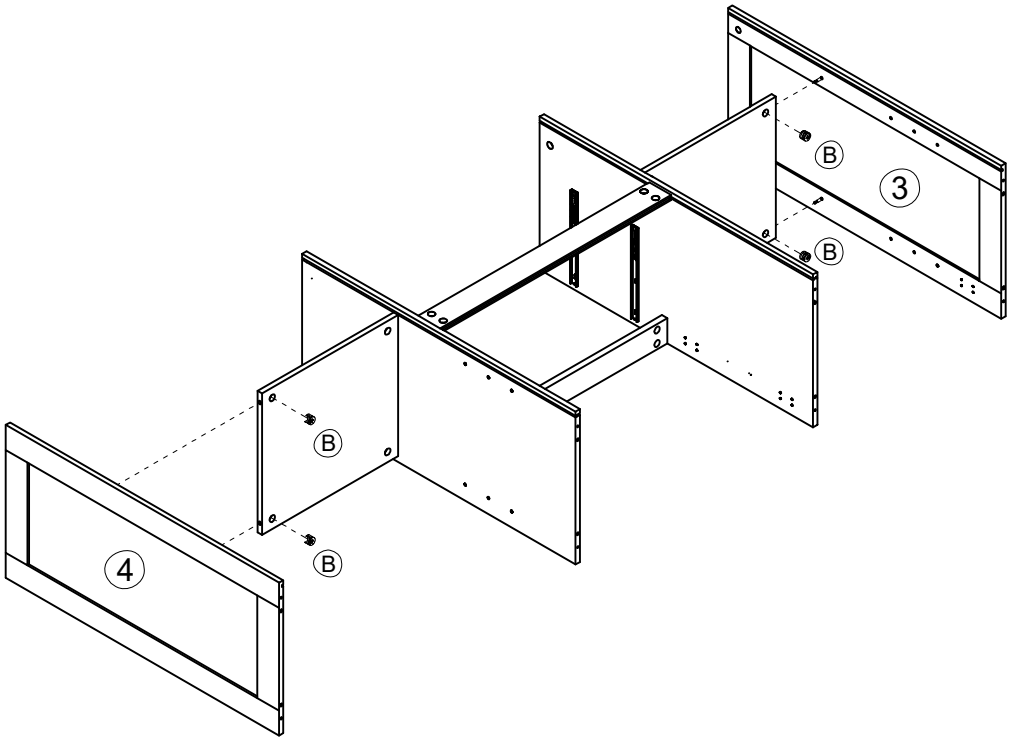

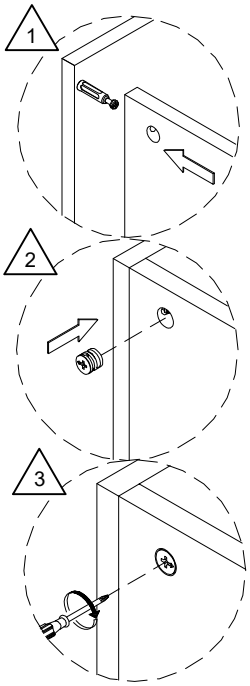

B	X4
Ø15*9.5mm	

Step9

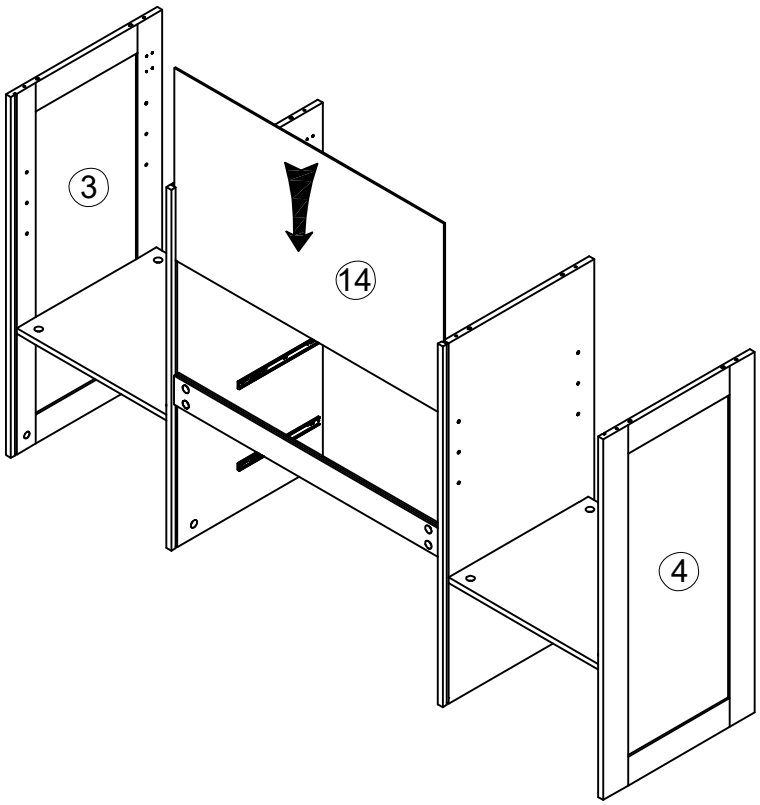

Step10

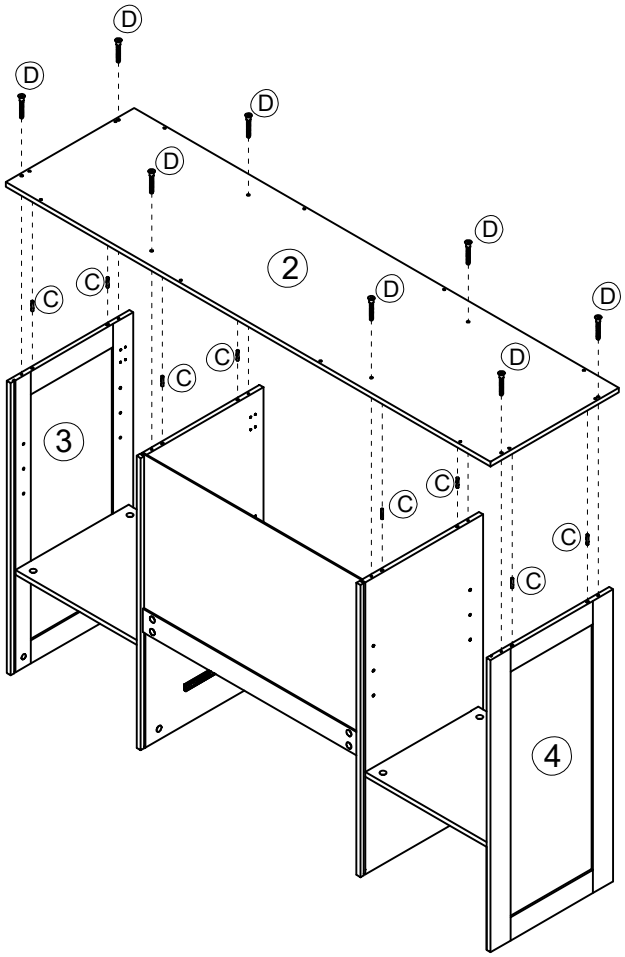

D	X8	C	X8
Ø5*40mm		Ø6*30mm	

Step11

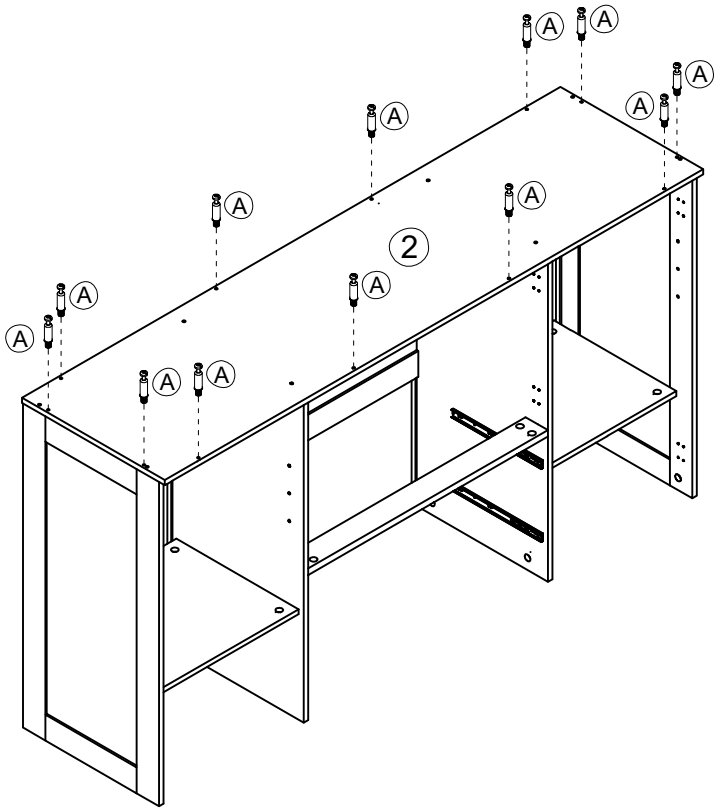

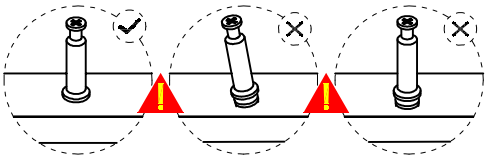

A	X12
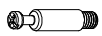	
Ø6*35mm	

Step12

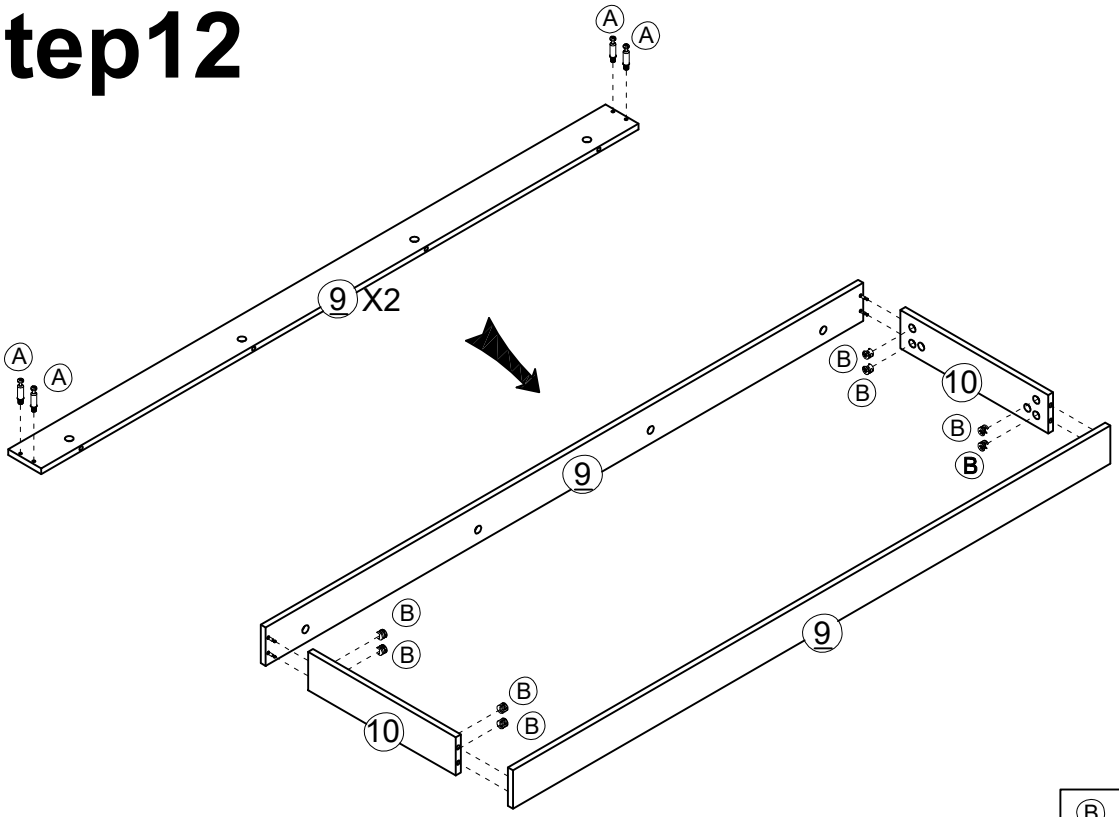

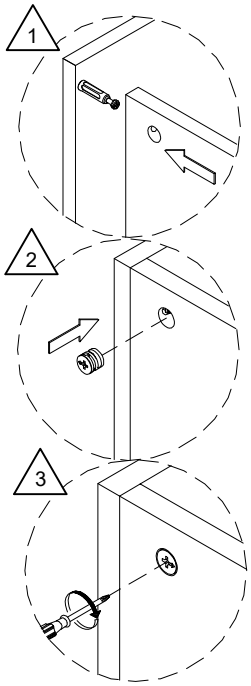

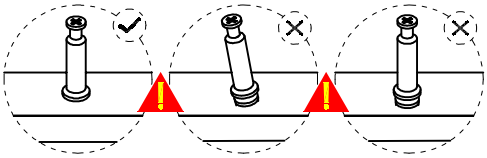

B	X8	A	X8
		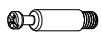	
Ø15*9.5mm		Ø6*35mm	

Step13

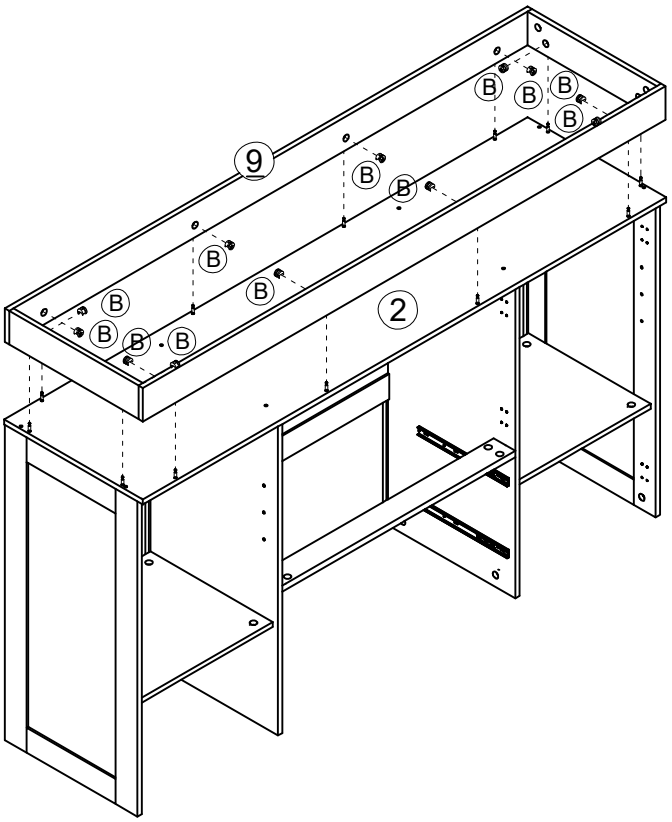

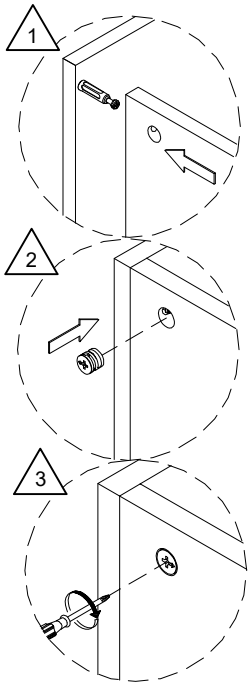

B	X12
Ø15*9.5mm	

Step14

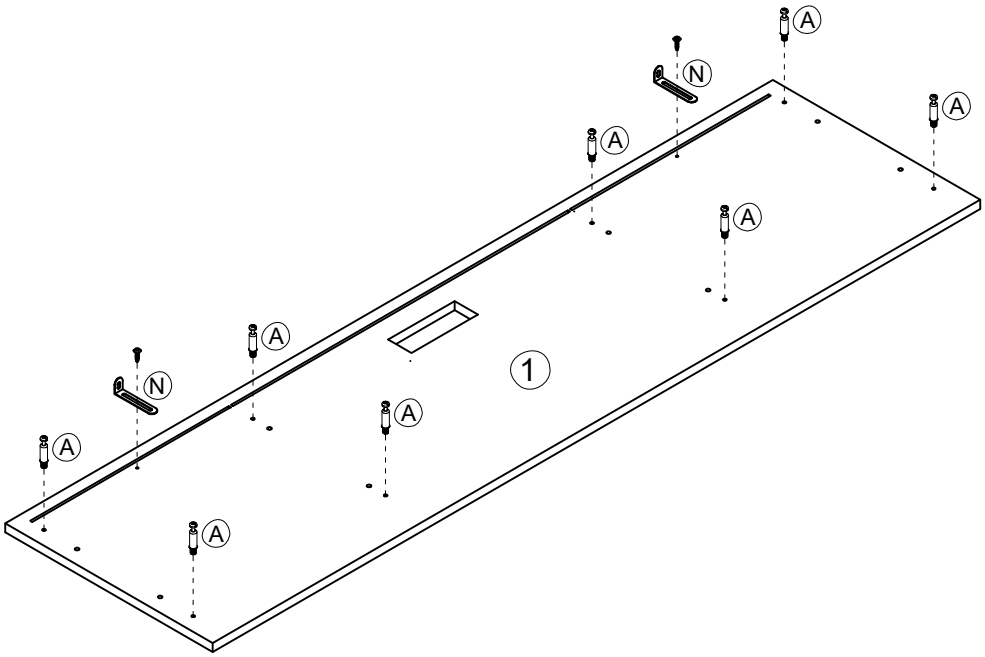

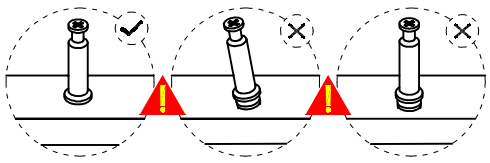

N	X2	A	X8
Ø4*12mm		Ø6*35mm	

Step15

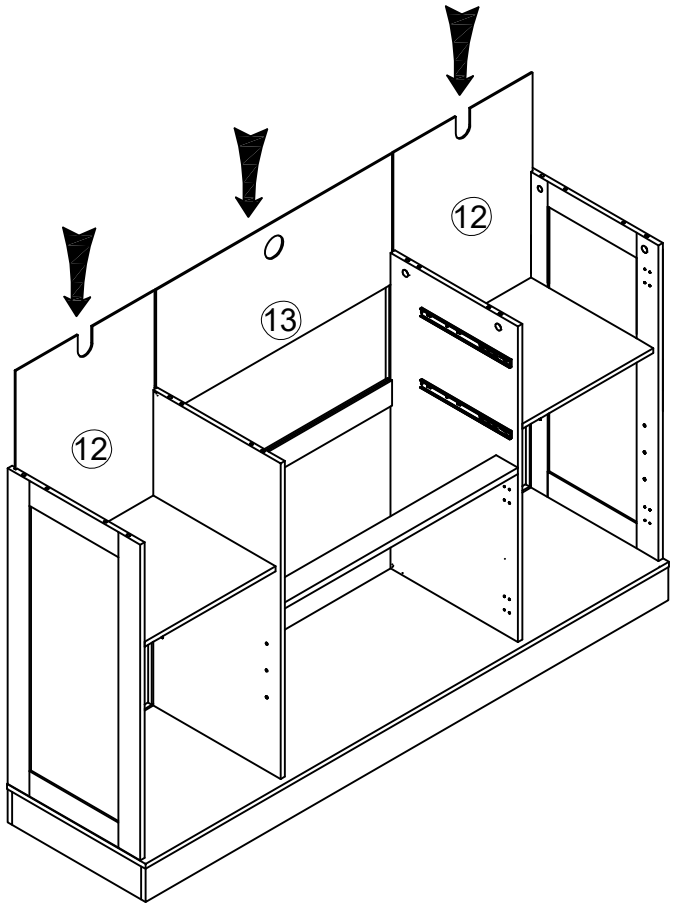

Step16

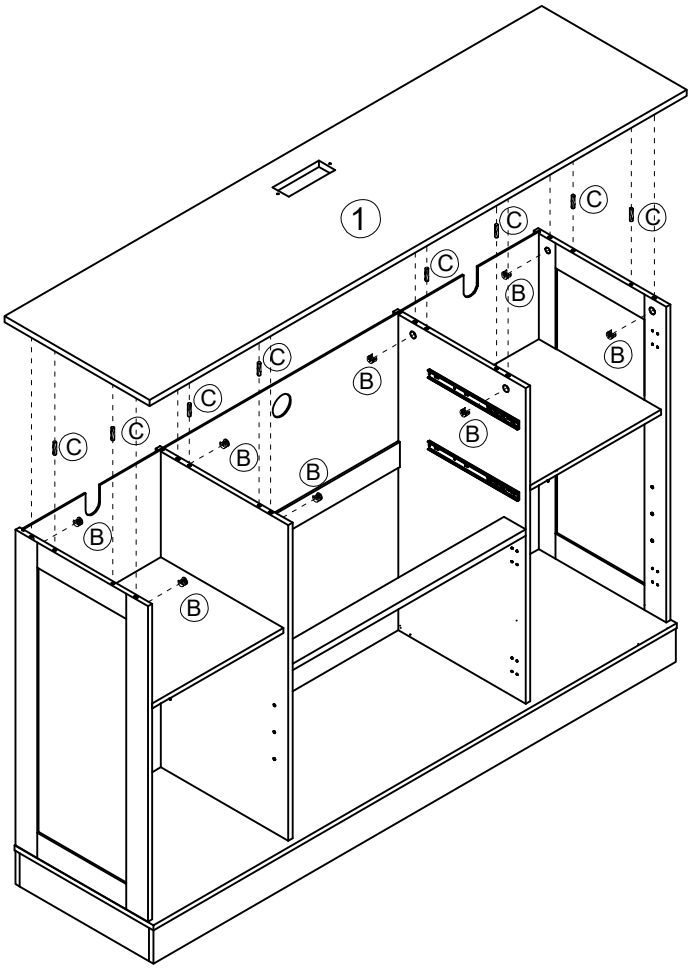

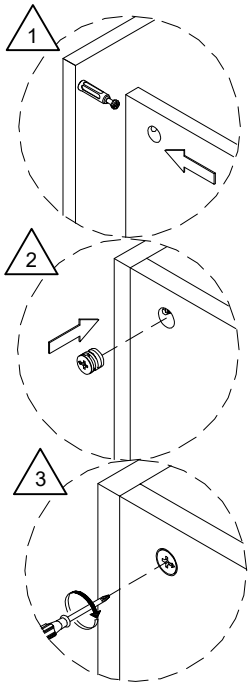

C	X8	B	X8
Ø6*30mm		Ø15*9.5mm	

Step17

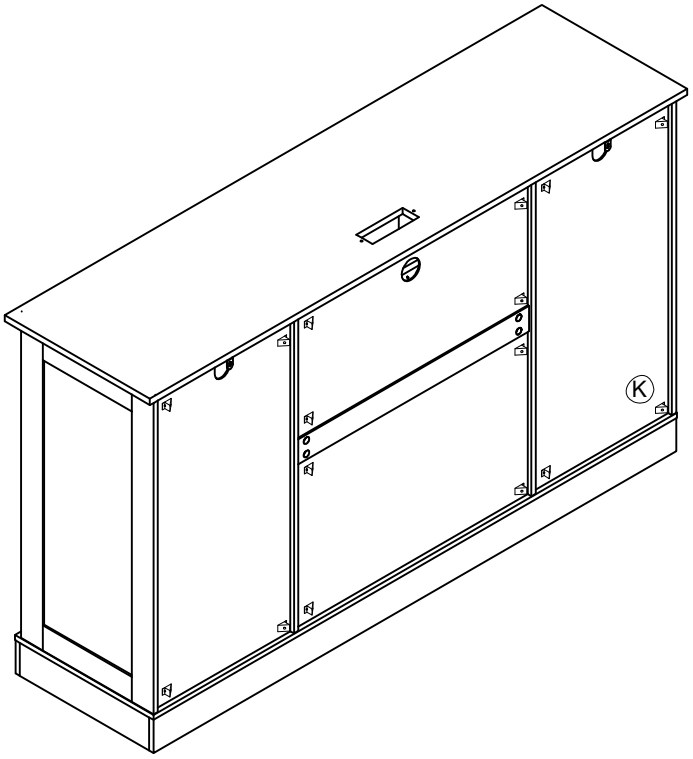

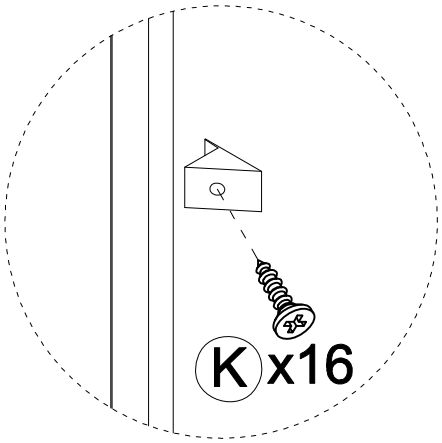

K	X16
Ø3*16mm	

Step18

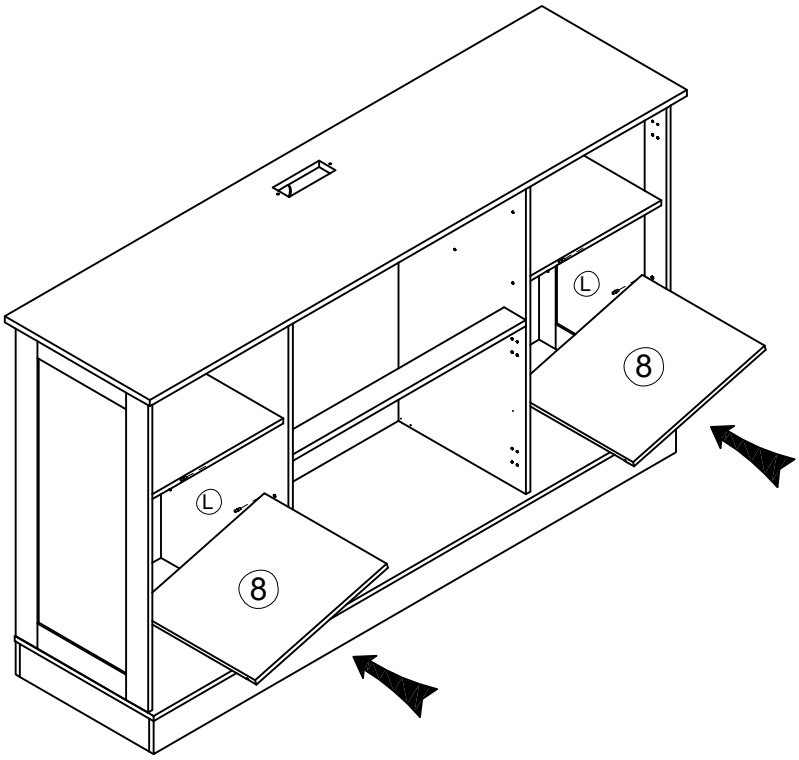

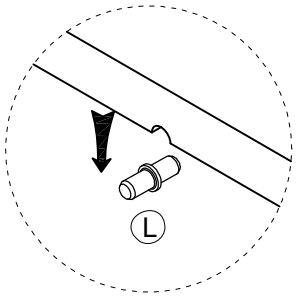

L	X8

Step19

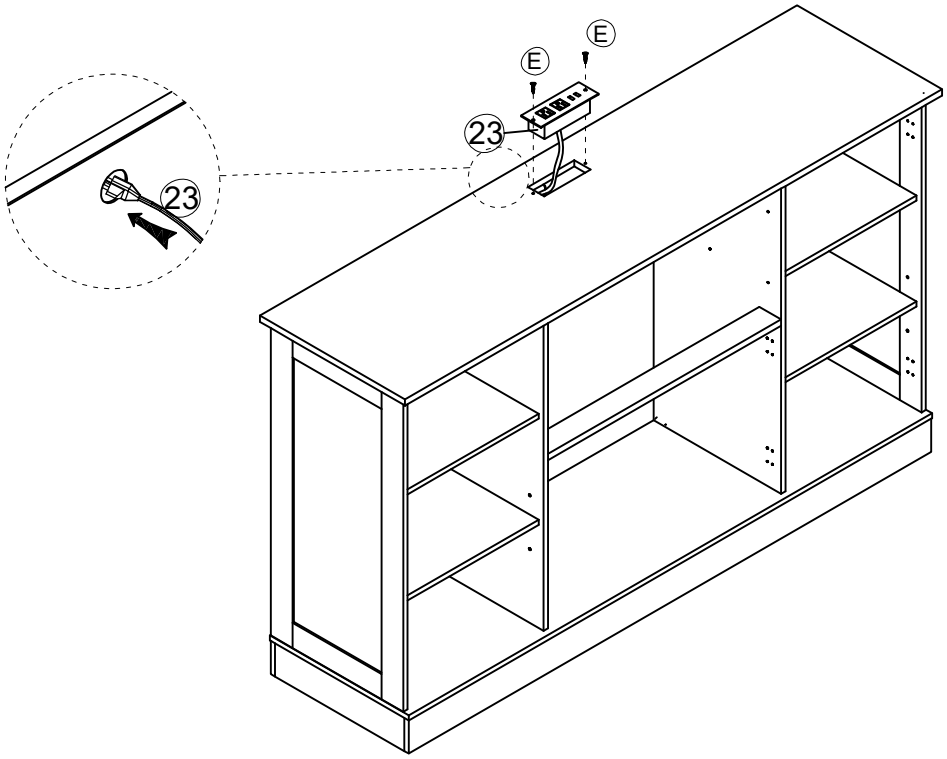

E	X2
Ø3.5*12mm	

Step20 X2

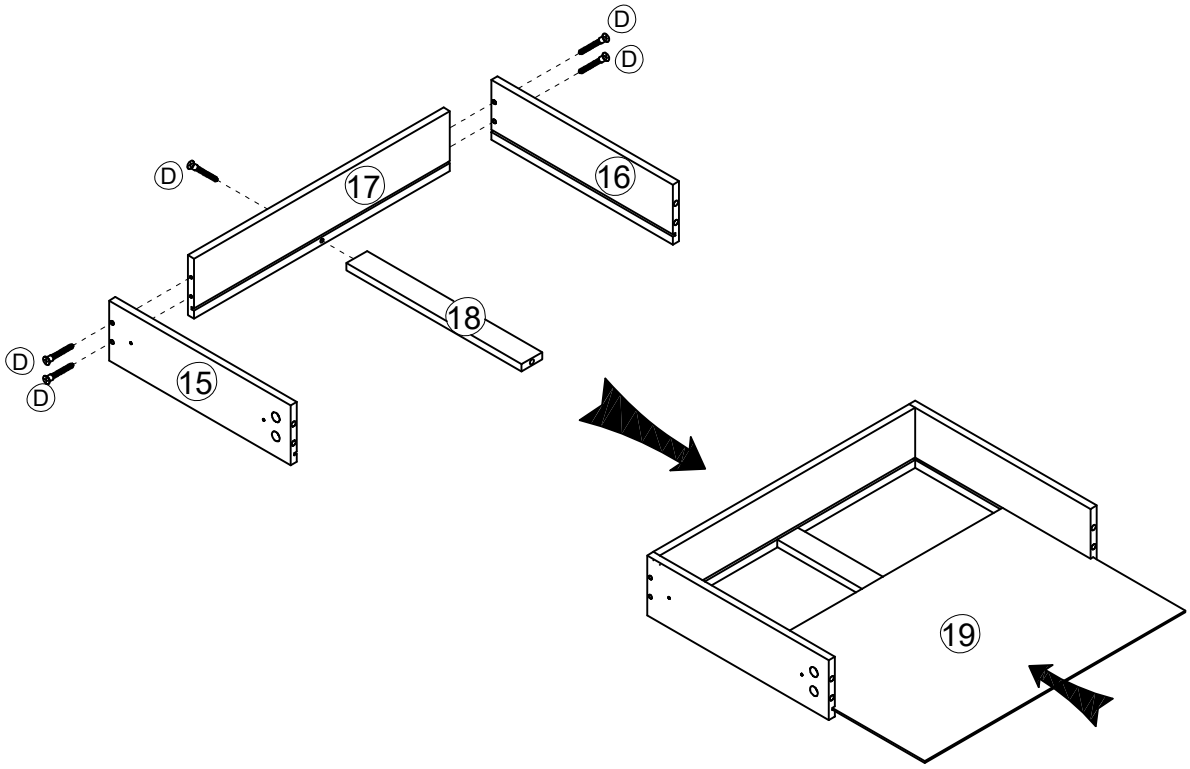

D	X10
Ø5*40mm	

Step21 X2

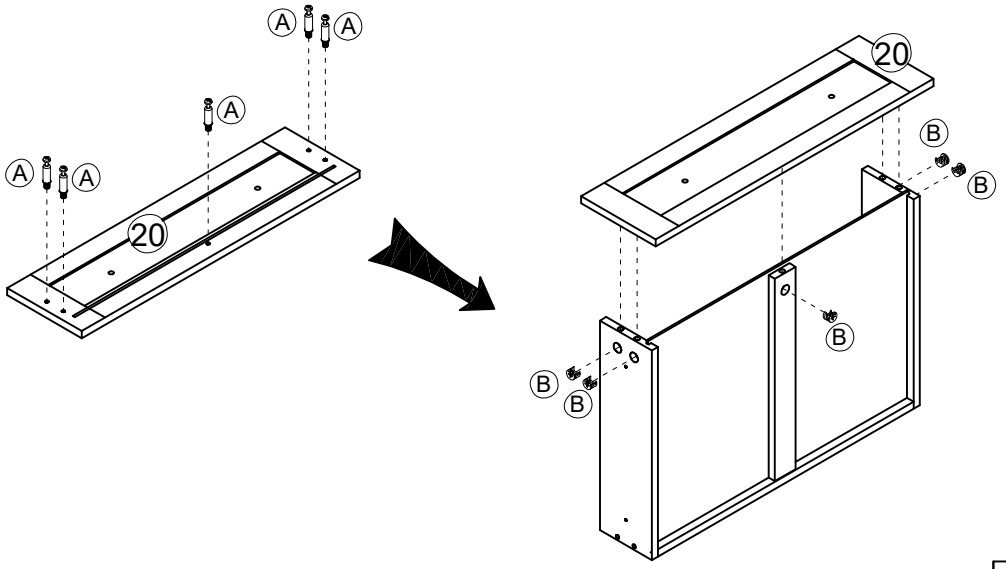

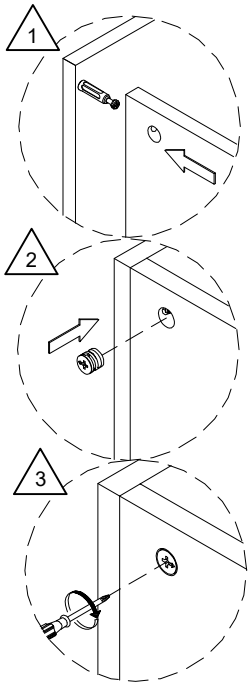

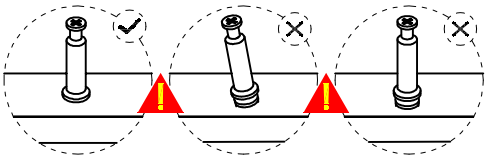

B	X10	A	X10
Ø15*9.5mm		Ø6*35mm	

Step22 X2

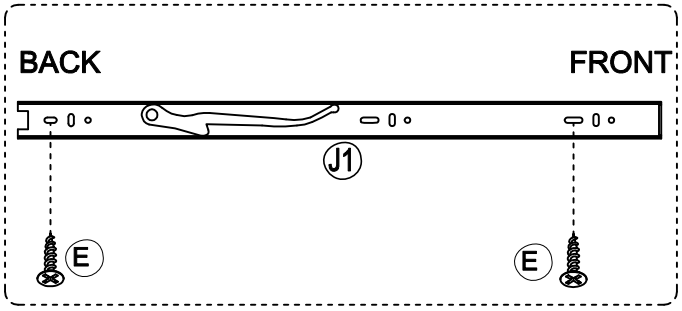

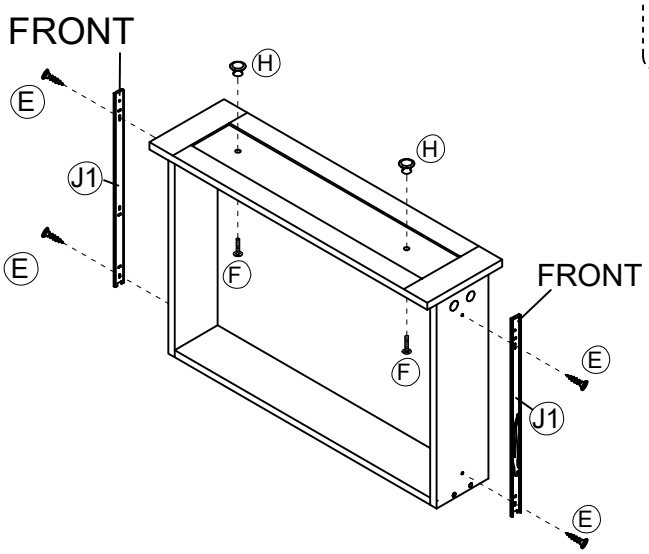

H	X4	F	X4	J	X4	E	X8
				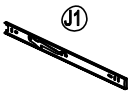			
		M4*8mm		300mm		Ø3.5*12mm	

Step23 X2

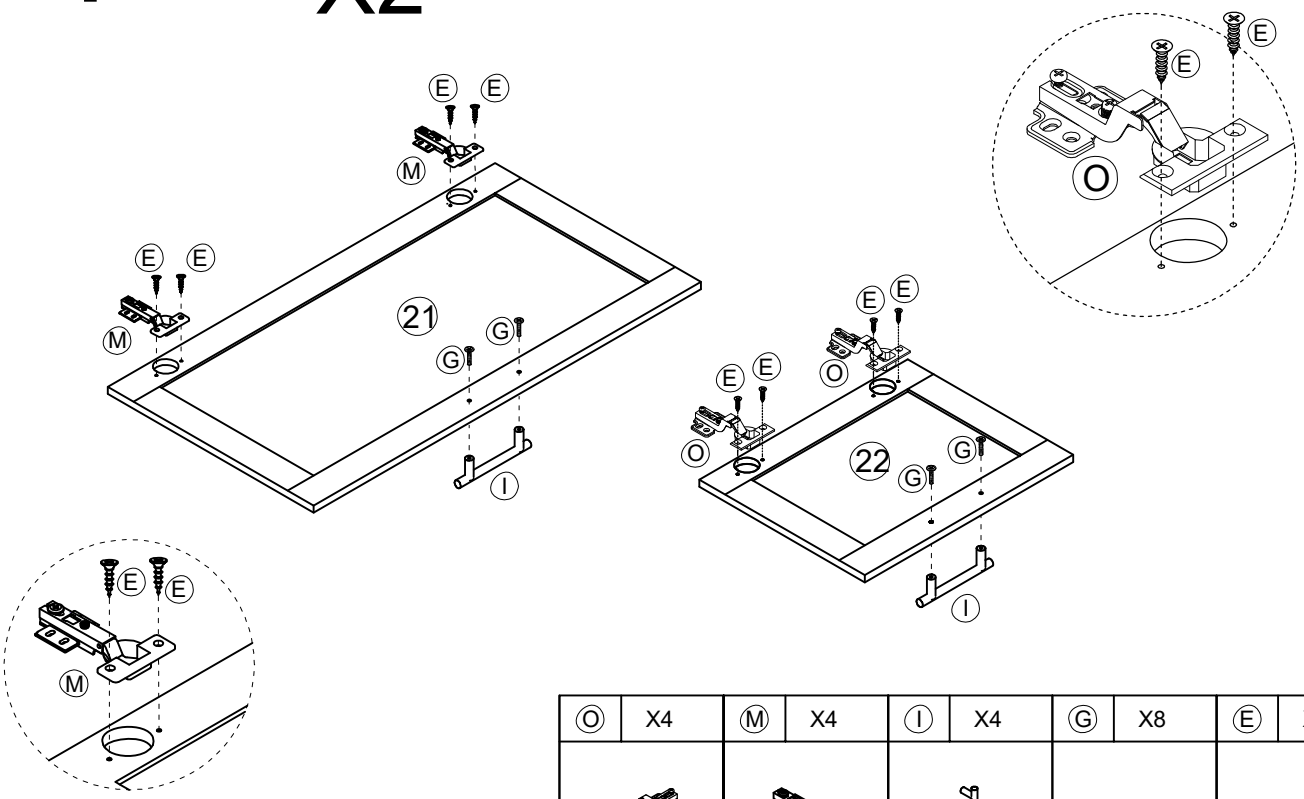

Ⓞ	X4	Ⓜ	X4	Ⓘ	X4	Ⓖ	X8	Ⓔ	X16
						M4*15mm		Ø3.5*12mm	

Step24

Align with the slide rail position and insert the drawer.

Note: For optimal alignment, please adjust the drawer up and down to fit the tracks properly.

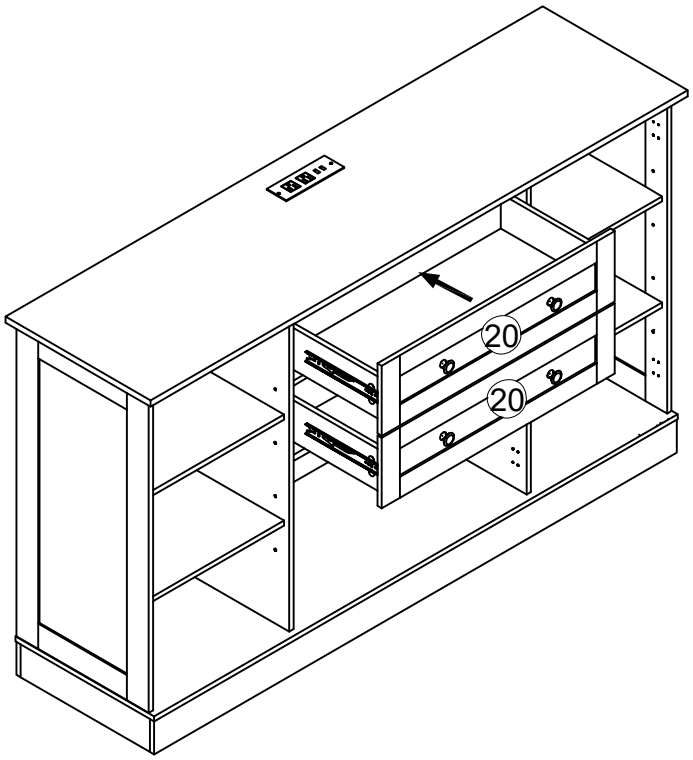

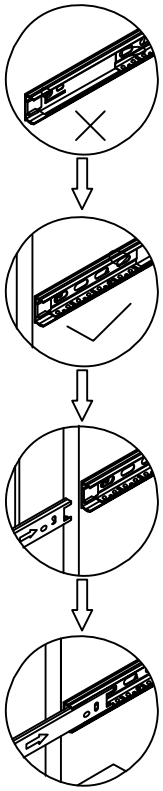

Step25

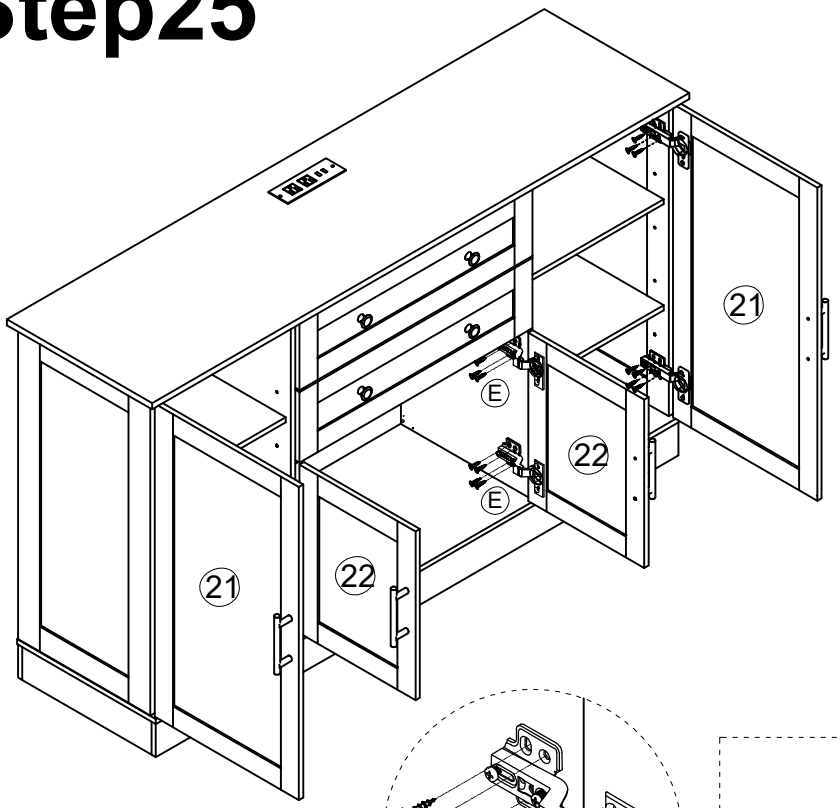

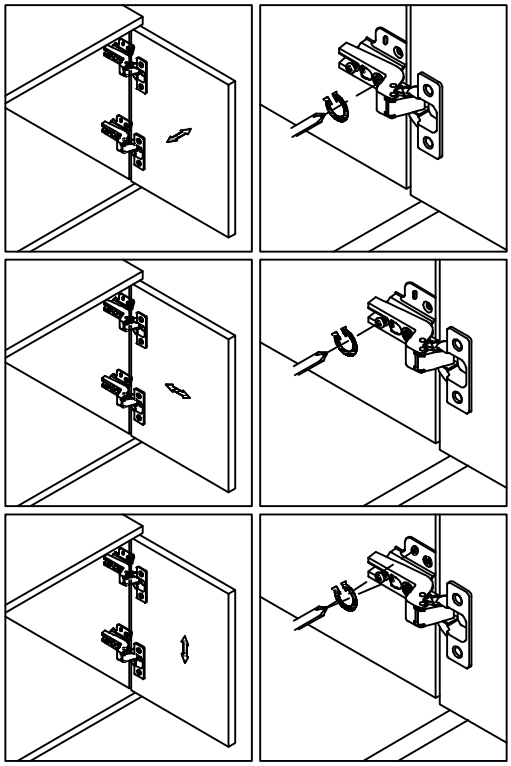

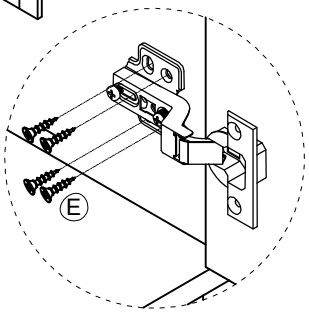

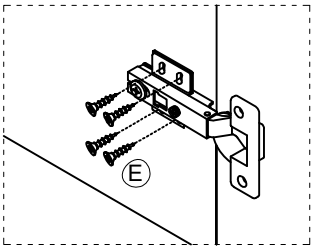

E	X32
Ø3.5*12mm	

Step26

Pull out drawer 21 and install N

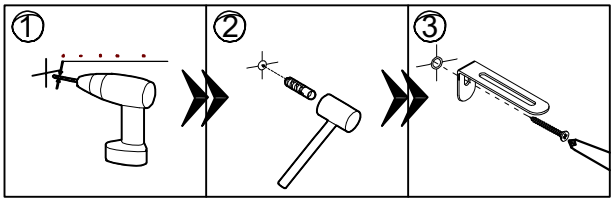

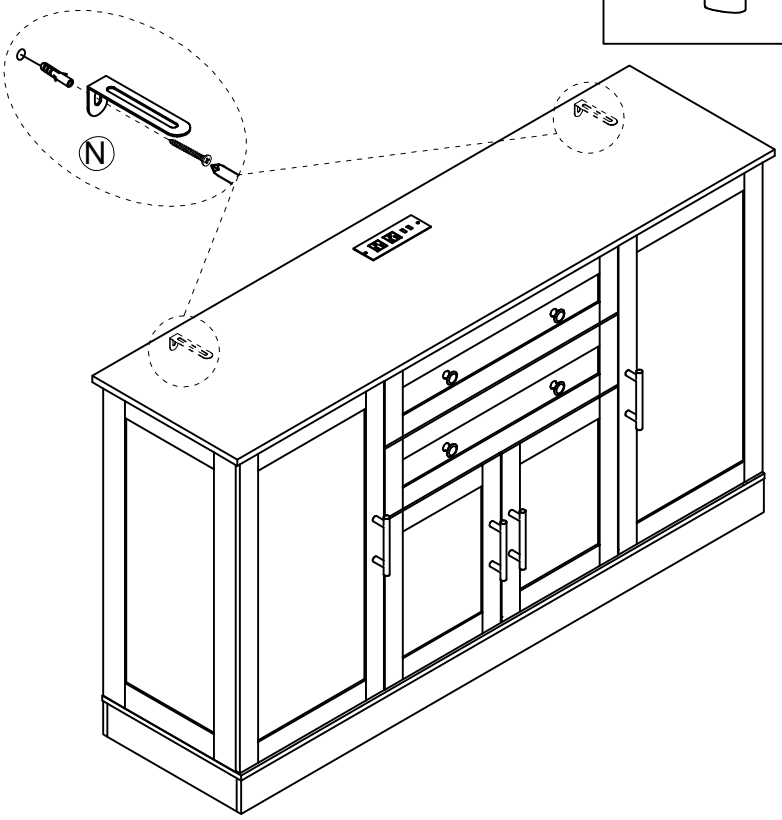

N	X2
Ø6*30&Ø4*35mm	