5128

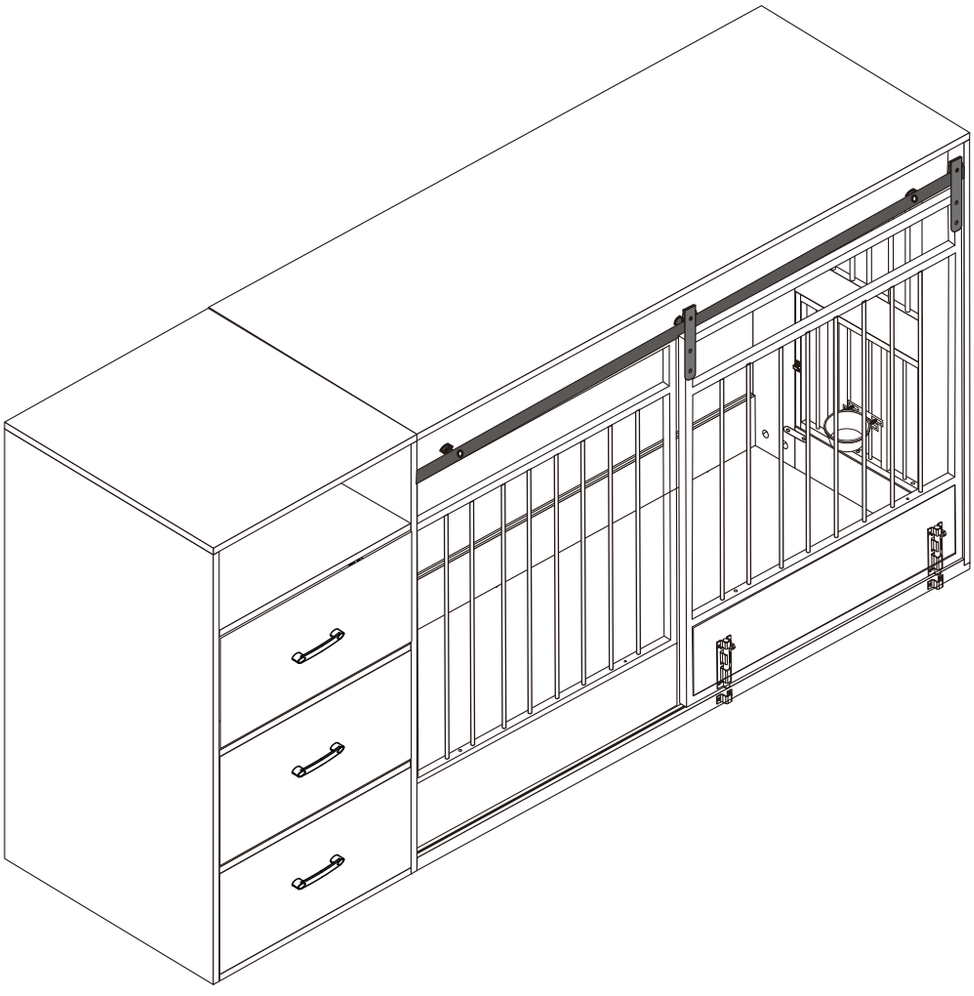

TIPS

1.When instaling the product, use a soft surface (such as carpet or cardboard) to avoid scratchingor damaging the surface of the product.
2.Please try to use a manual screwdriver instead of an electric screwdriver. A manual screwdriver can be used to better control the tightness of the screws.
3.Do not use glue.
4.The product is unstable before assembly. Please observe the product installation sequence and align all screws and screw holes before tightening.
5.The structure of this product may not meet the requirements of children climbing

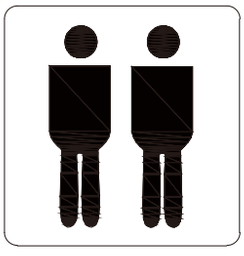

ASSEMBLY GUIDE

Thank you for shopping from us!

In order to enable you to better install or use this product, please carefully read the precautions and detailed functional operation instructions mentioned in this manual.

Hope you will have a good experience!

This assembly guide includes the Part List, Installation Steps and Warning Tips.

To reduce your wait, the item may be shipped in tow box. Please check your package once you receive it. If you have any questions or issues with your item, please feel free to contact us, we have 24-hour customer service.

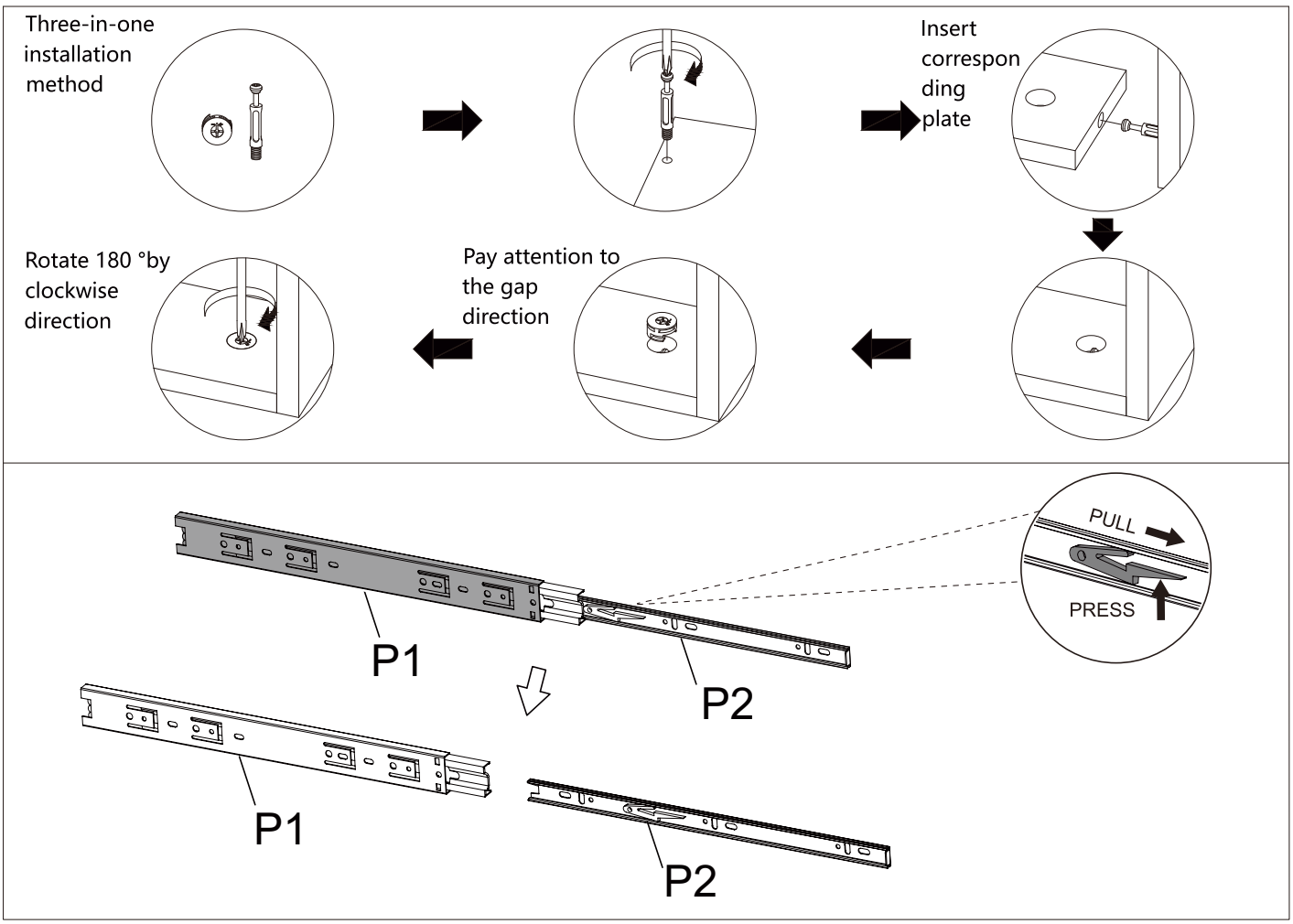

INSTALLATION

Pre-installation Inspection

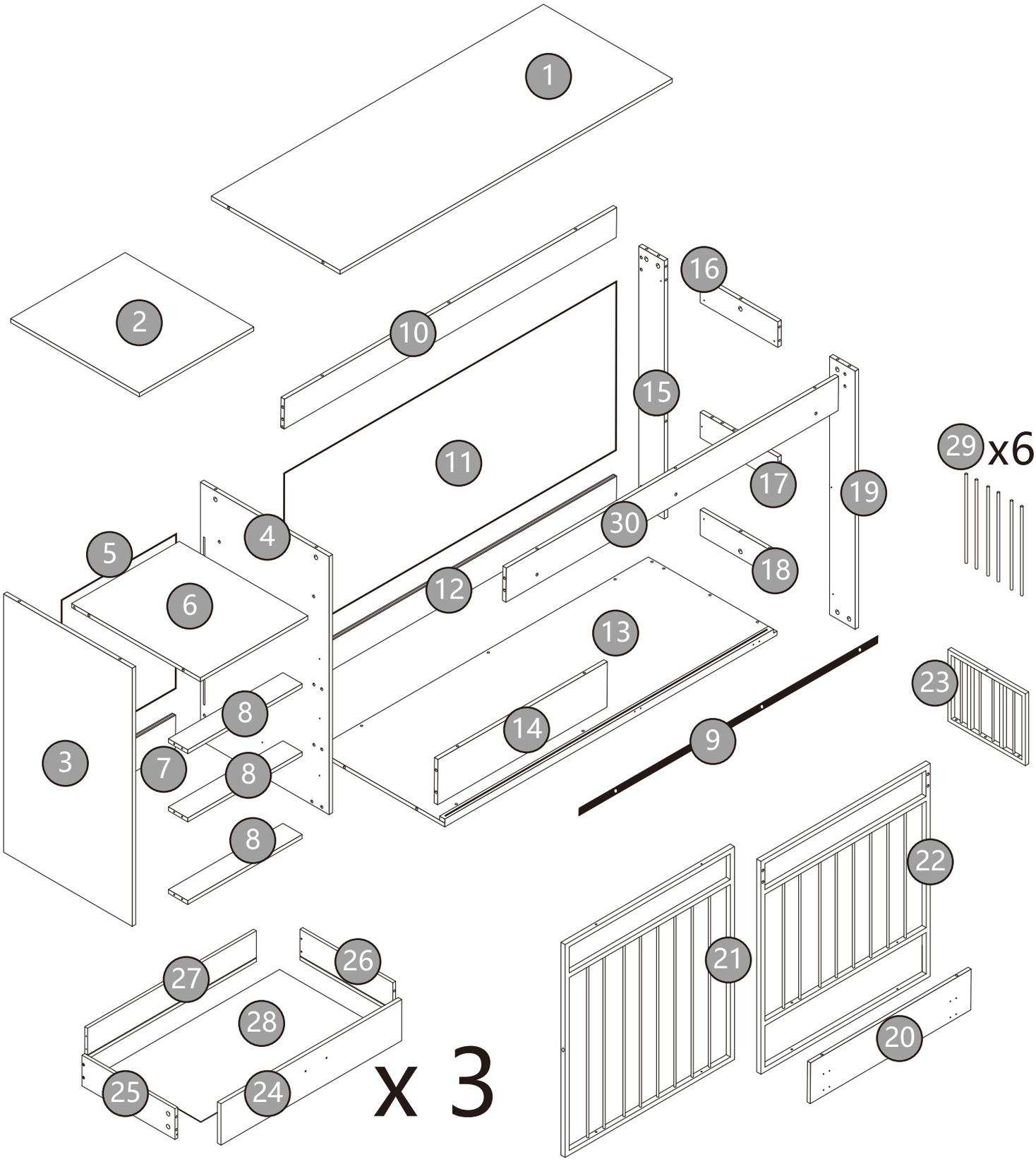

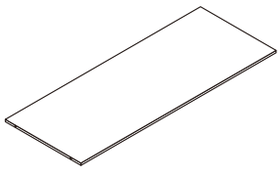	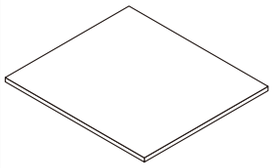		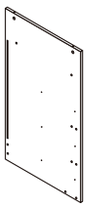	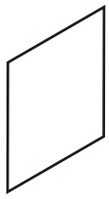
1 1 PC	2 1 PC	3 1 PC	4 1 PC	5 1 PC
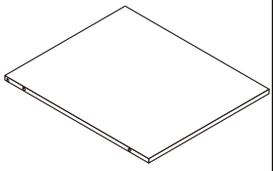	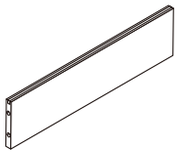	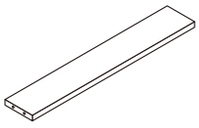		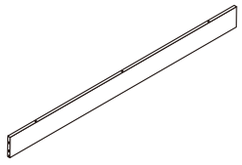
6 1 PC	7 1 PC	8 3PCS	9 1 PC	10 1 PC
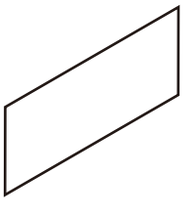	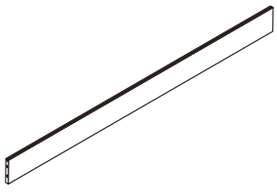		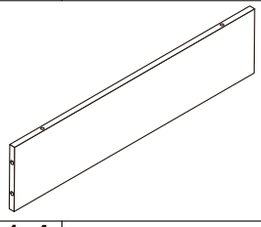	
11 1 PC	12 1 PC	13 1 PC	14 1 PC	15 1 PC
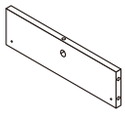	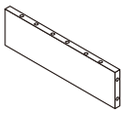	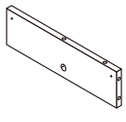		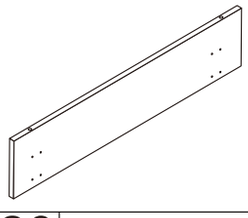
16 1 PC	17 1 PC	18 1 PC	19 1 PC	20 1 PC
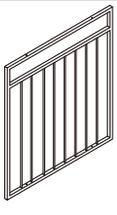	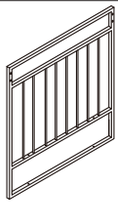	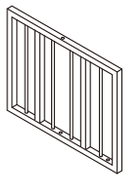	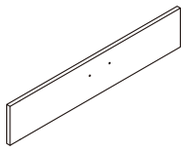	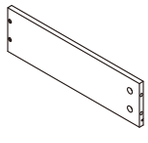
21 1 PC	22 1 PC	23 1 PC	24 3 PCS	25 3PCS
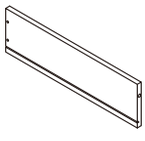	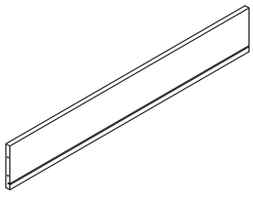	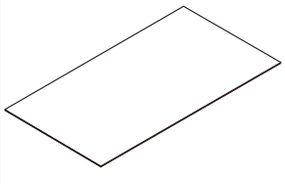		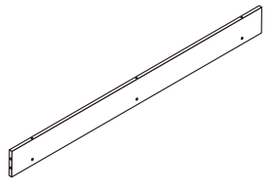
26 3 PCS	27 3 PCS	28 3PCS	29 6 PCS	30 1 PC

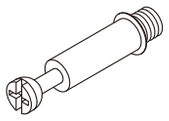				
M6x35	Ø15x12	M4x12	M4x30	
A x70+1	B x70+1	C x38+1	D x12+1	E x1
	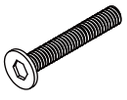	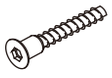		
M6x15	M6x35	M7x35		
F x4+1	G x3+1	H x8+1	I x2	J x2
		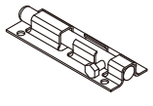		
	M4x18			
K x3	L x6	M x3	N x4	O x7
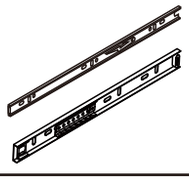	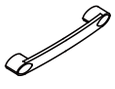		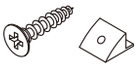	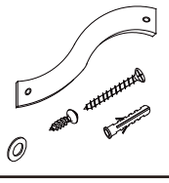
		Ø8x25		
P x6	Q x3	R x12+1	S x16+1	T x2
	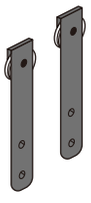		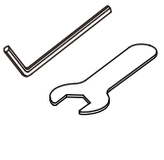	
M4x12		Ø6x25		
U x20+1	V x1	W x3+1	X x1	Y x1
				
M4x12				
Z x4+1				

STEP1

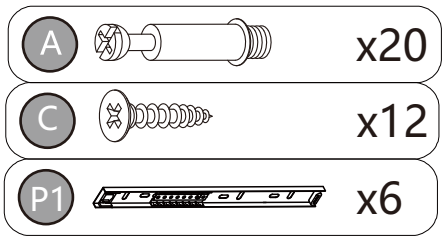

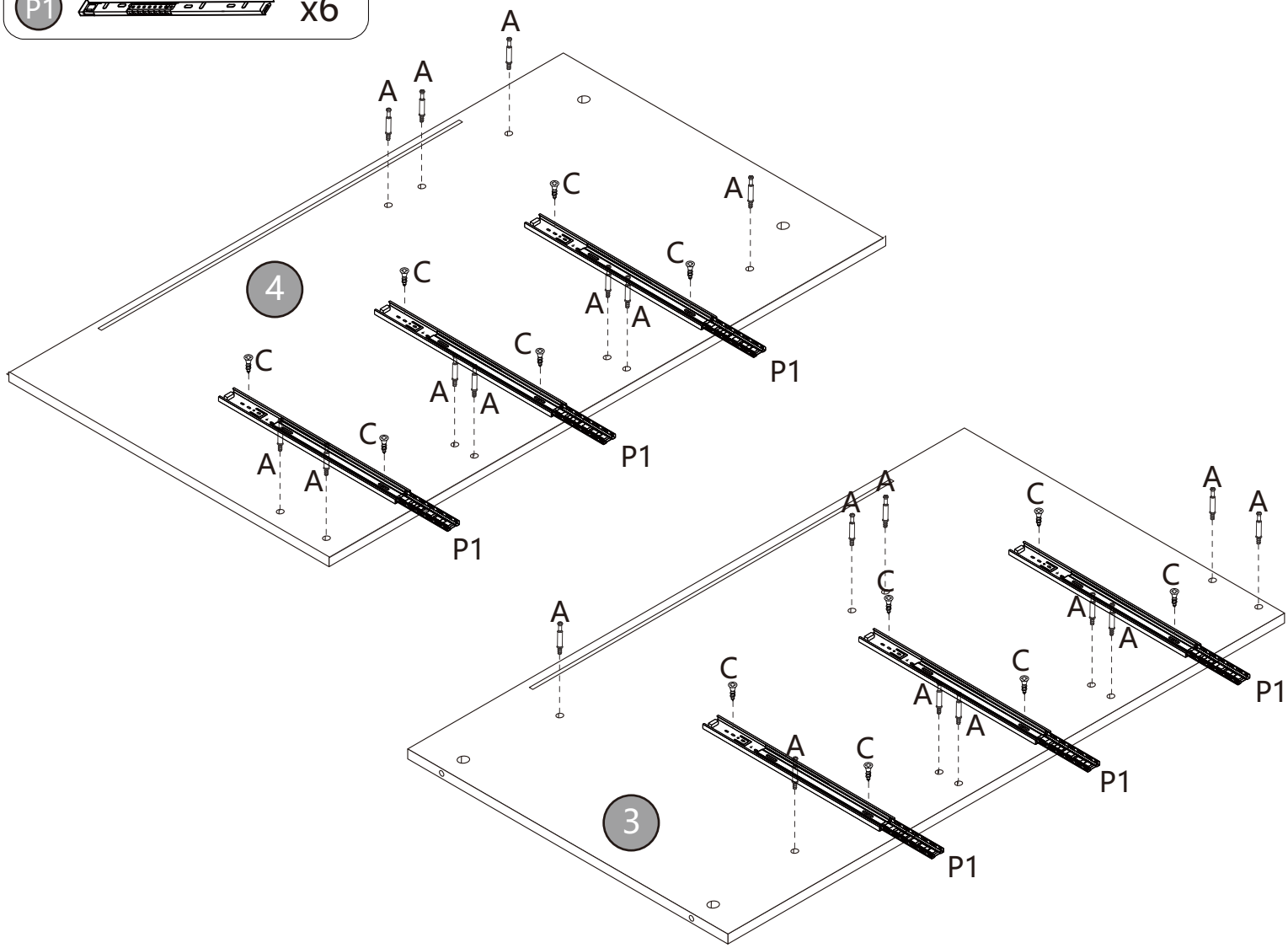

For specific operation methods, please refer to page 2.Please note: When disassembling the drawer tracks, there may be some residual lubricating oil. This is a normal phenomenon and can be cleaned with ordinary hand sanitizer.

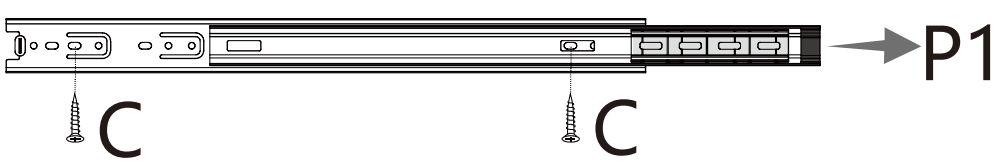

STEP2

B 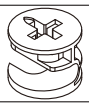 x10

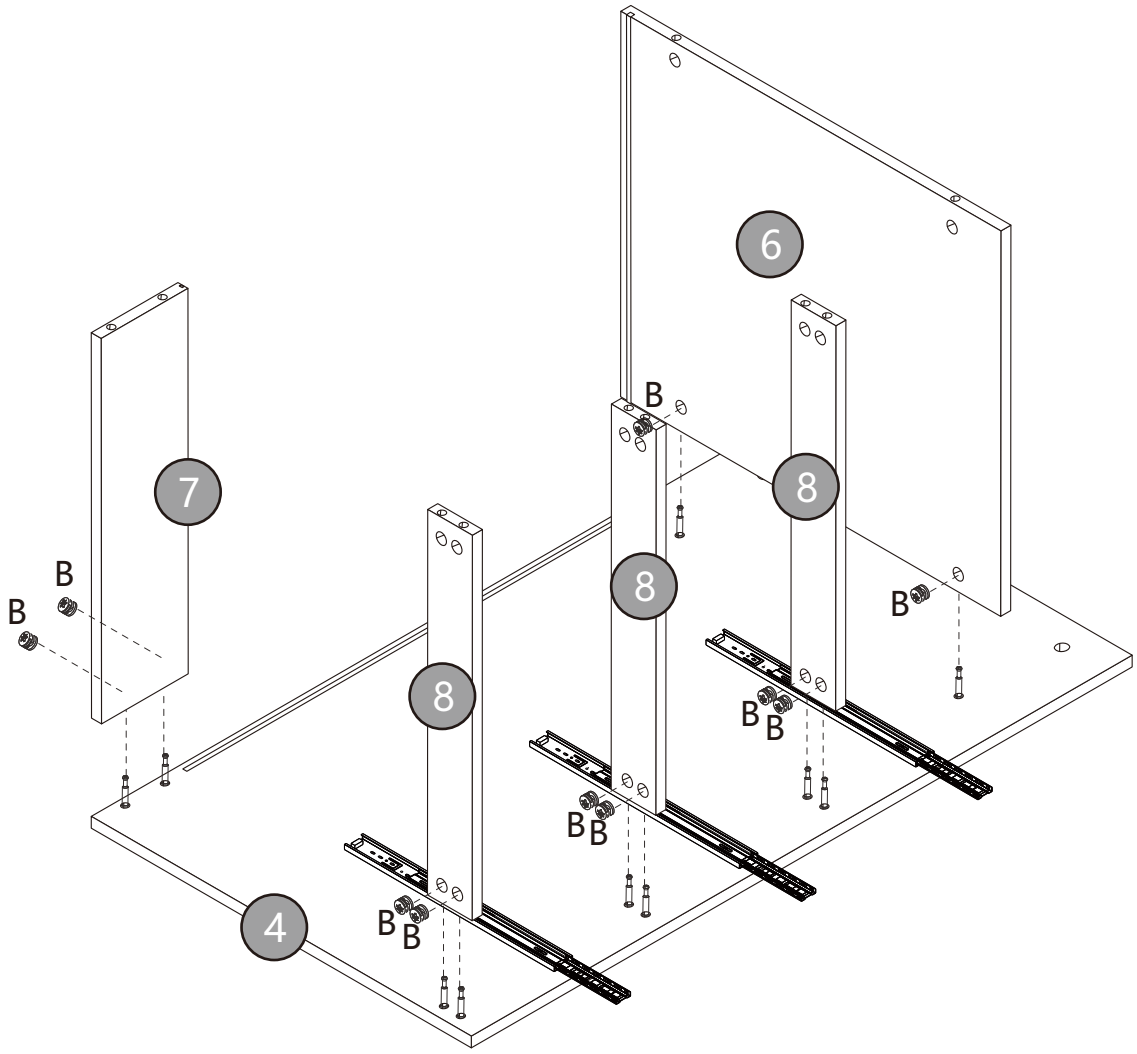

STEP3

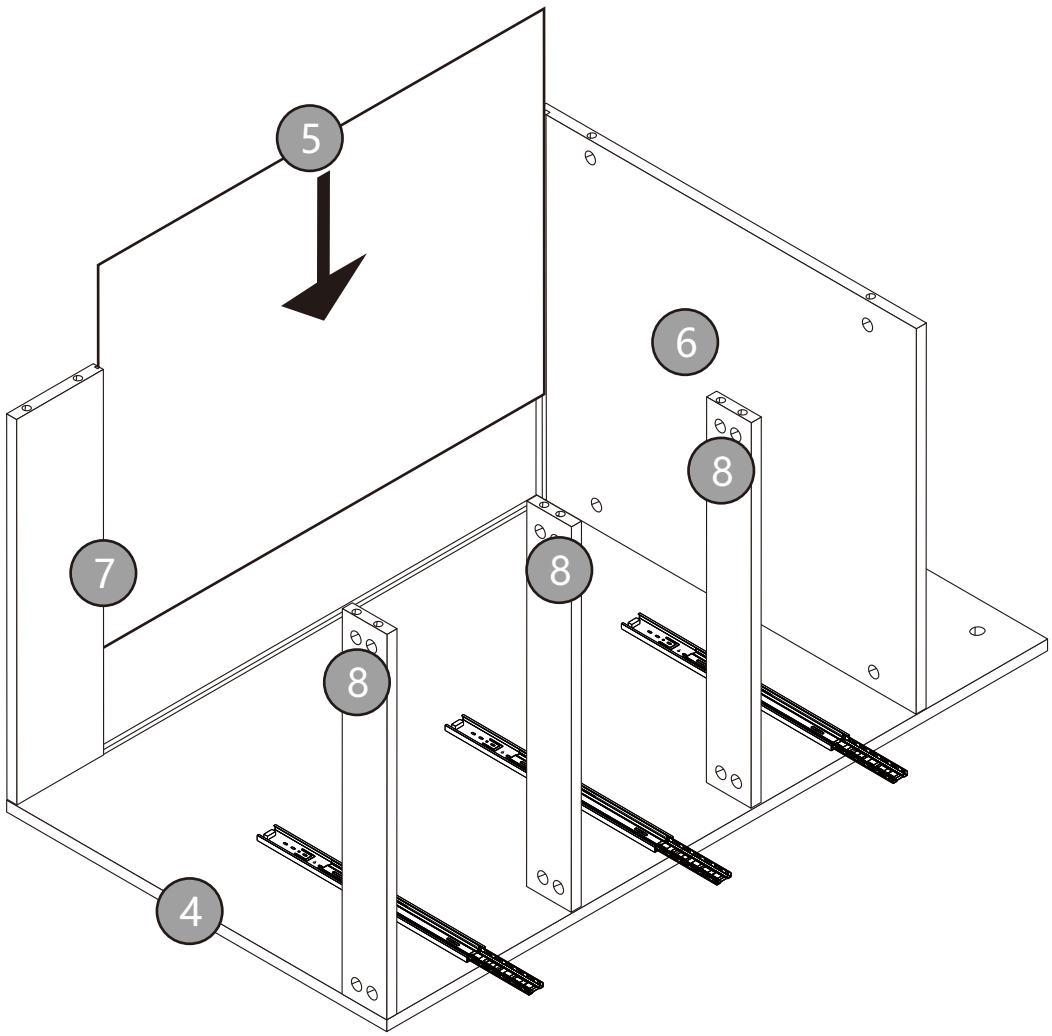

STEP4

B 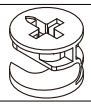 x10

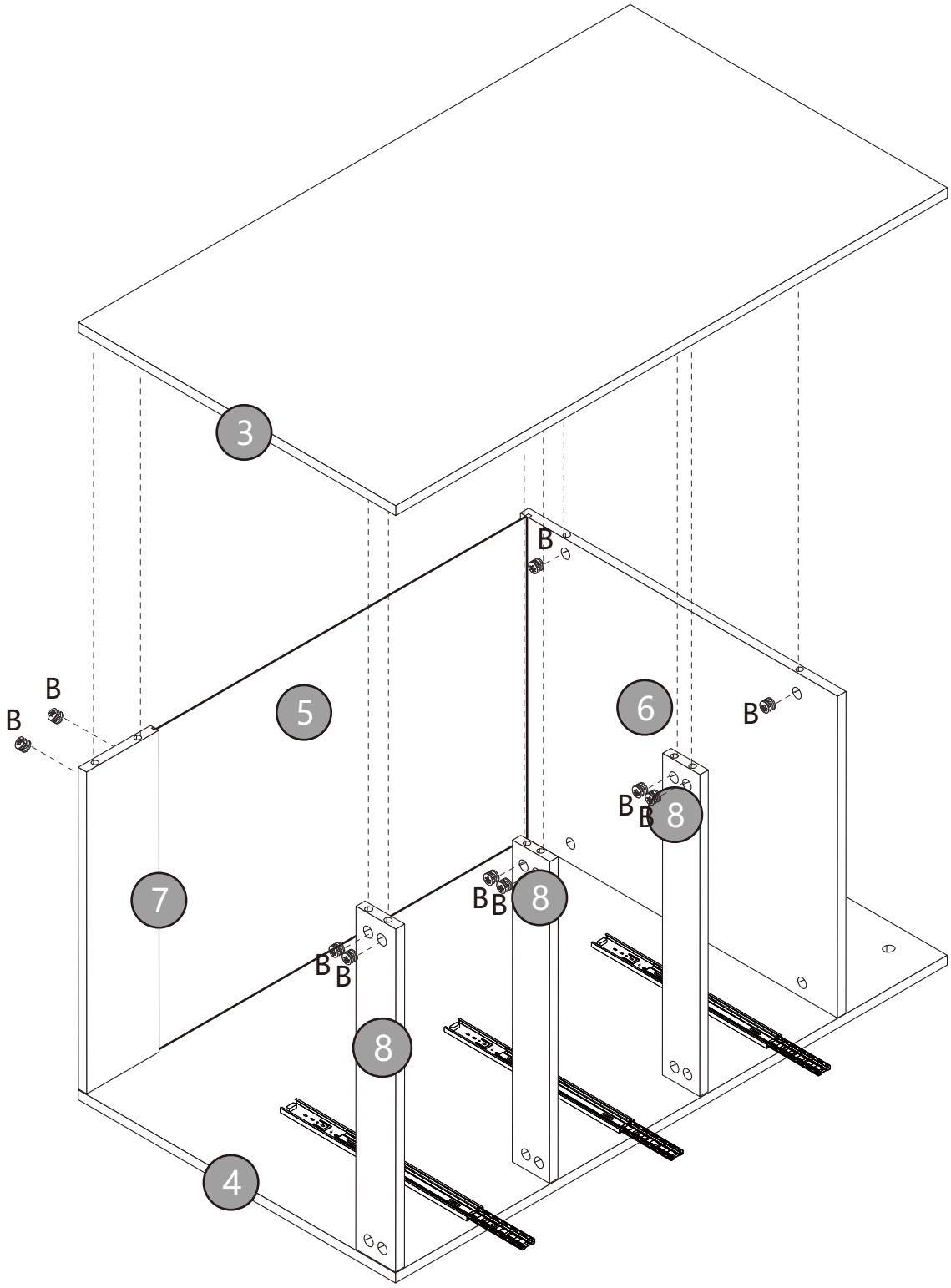

STEP5

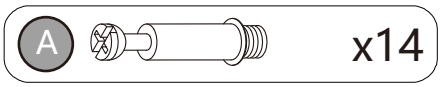

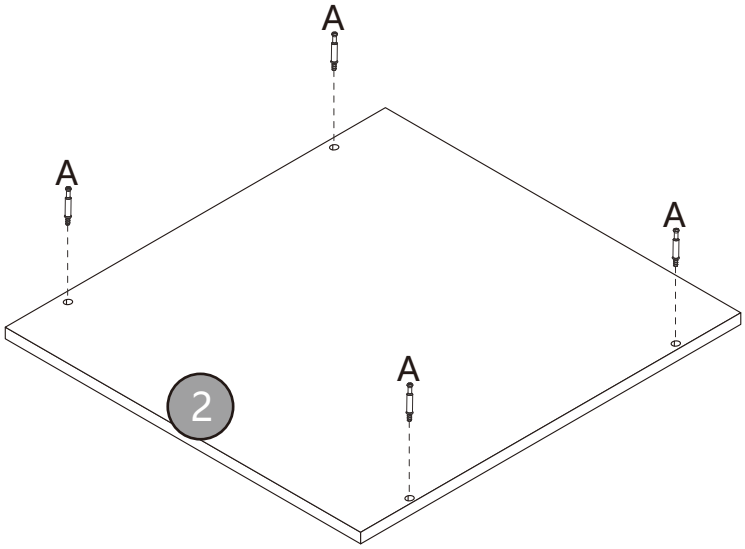

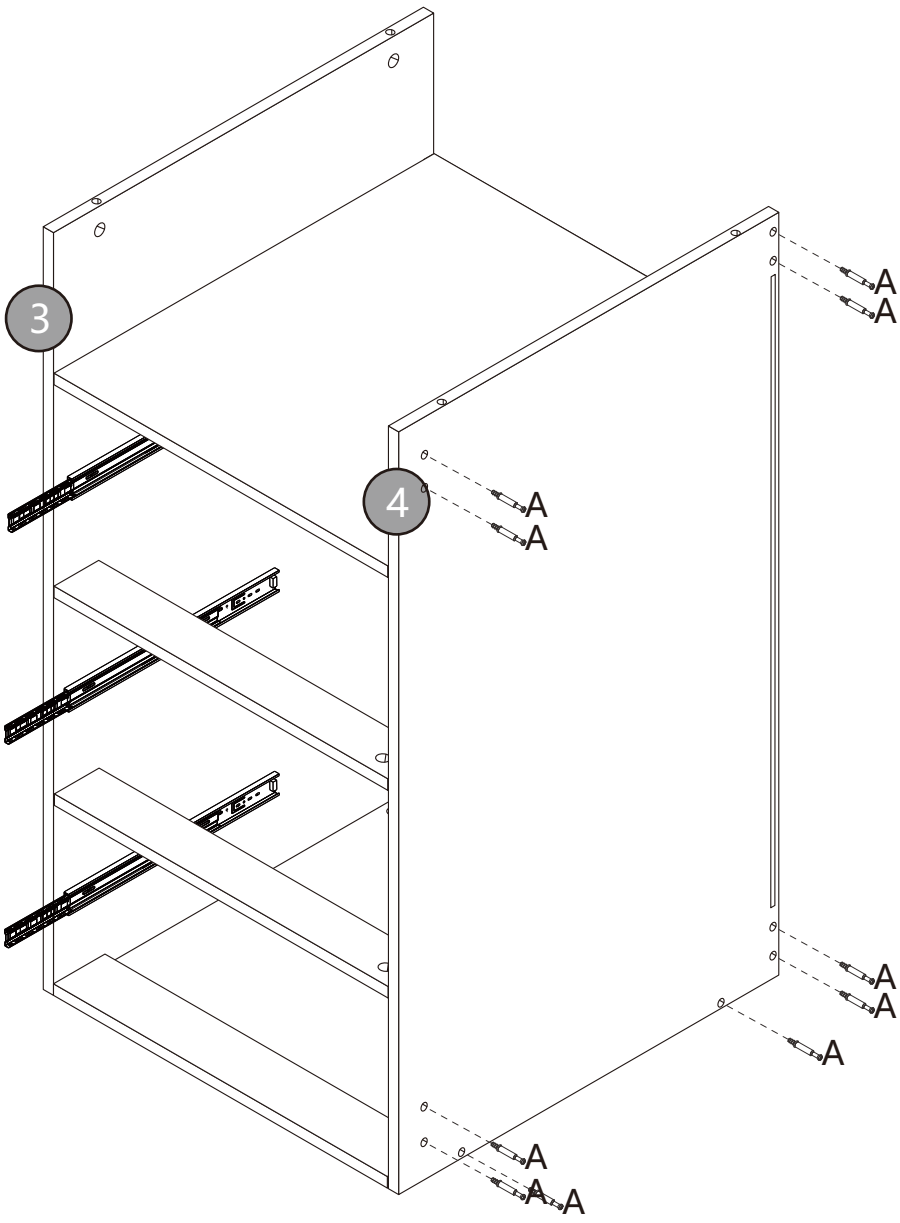

STEP6

B x4

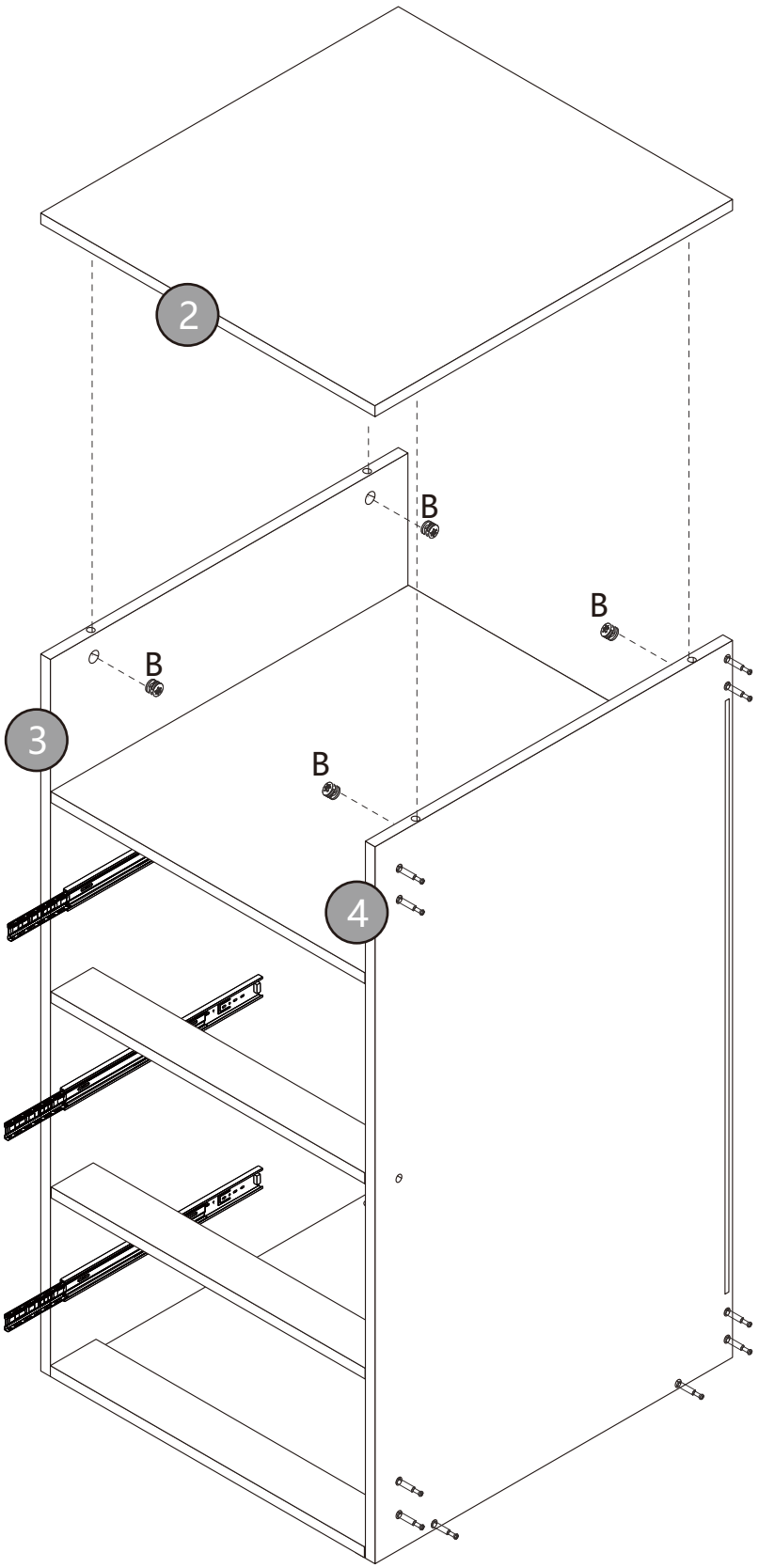

STEP7

N		x2
Z		x4

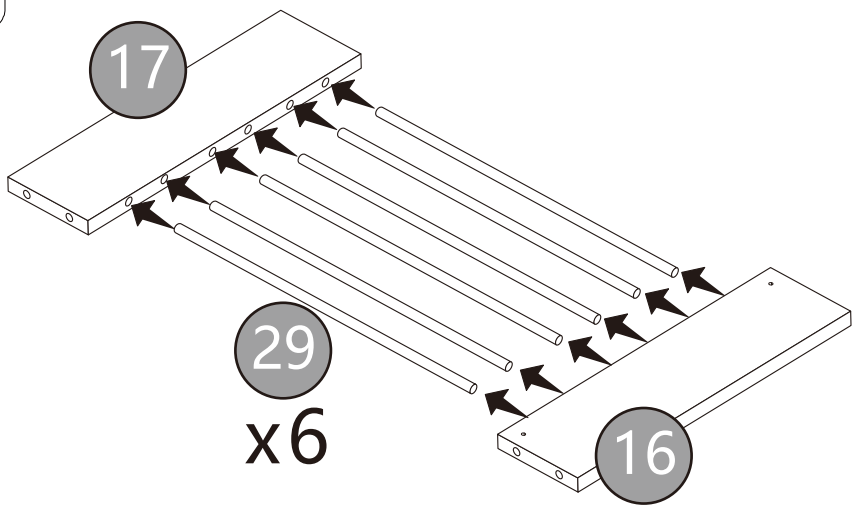

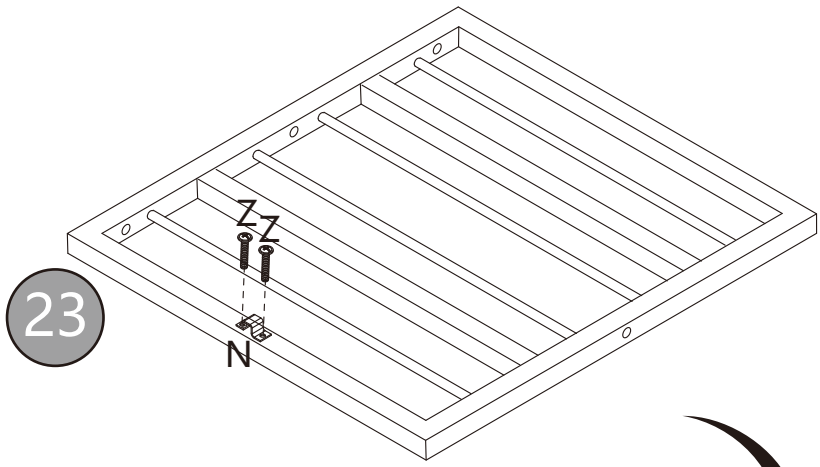

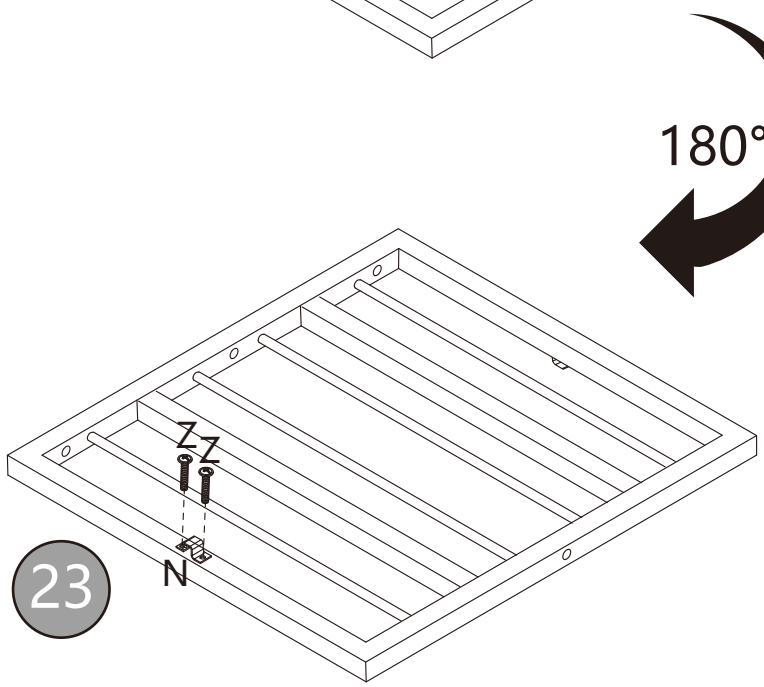

STEP8

R		x12
C		x12
O		x6

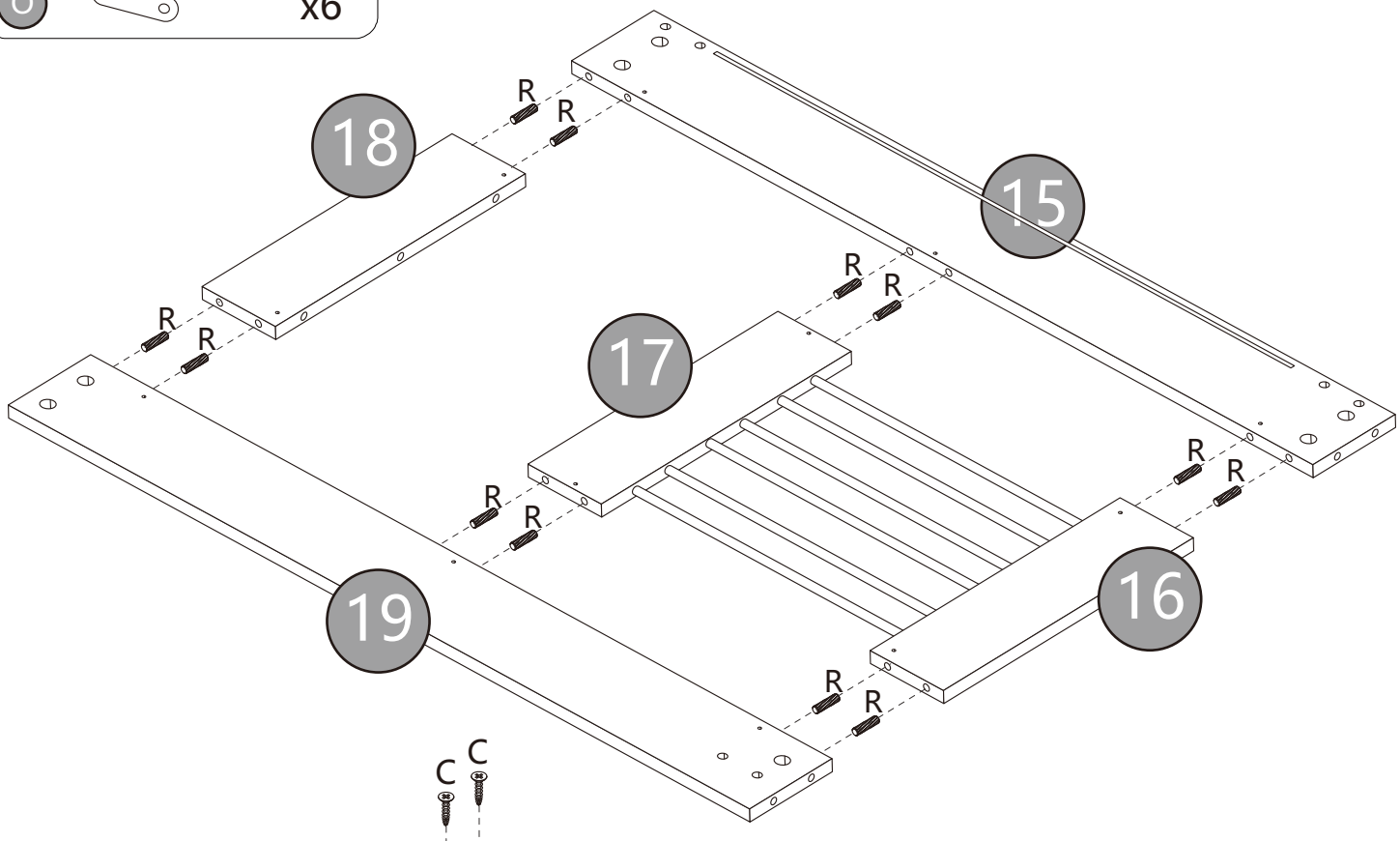

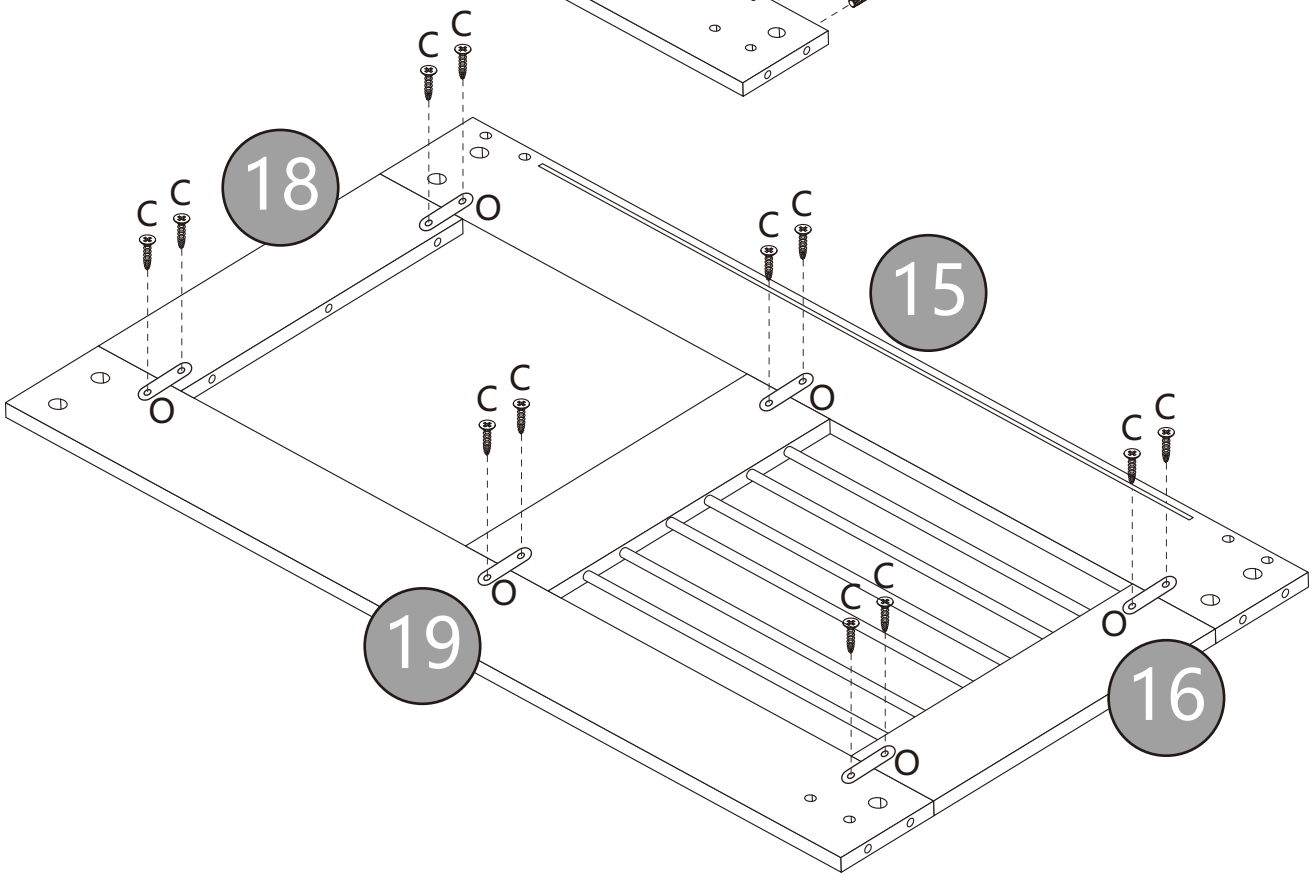

STEP9

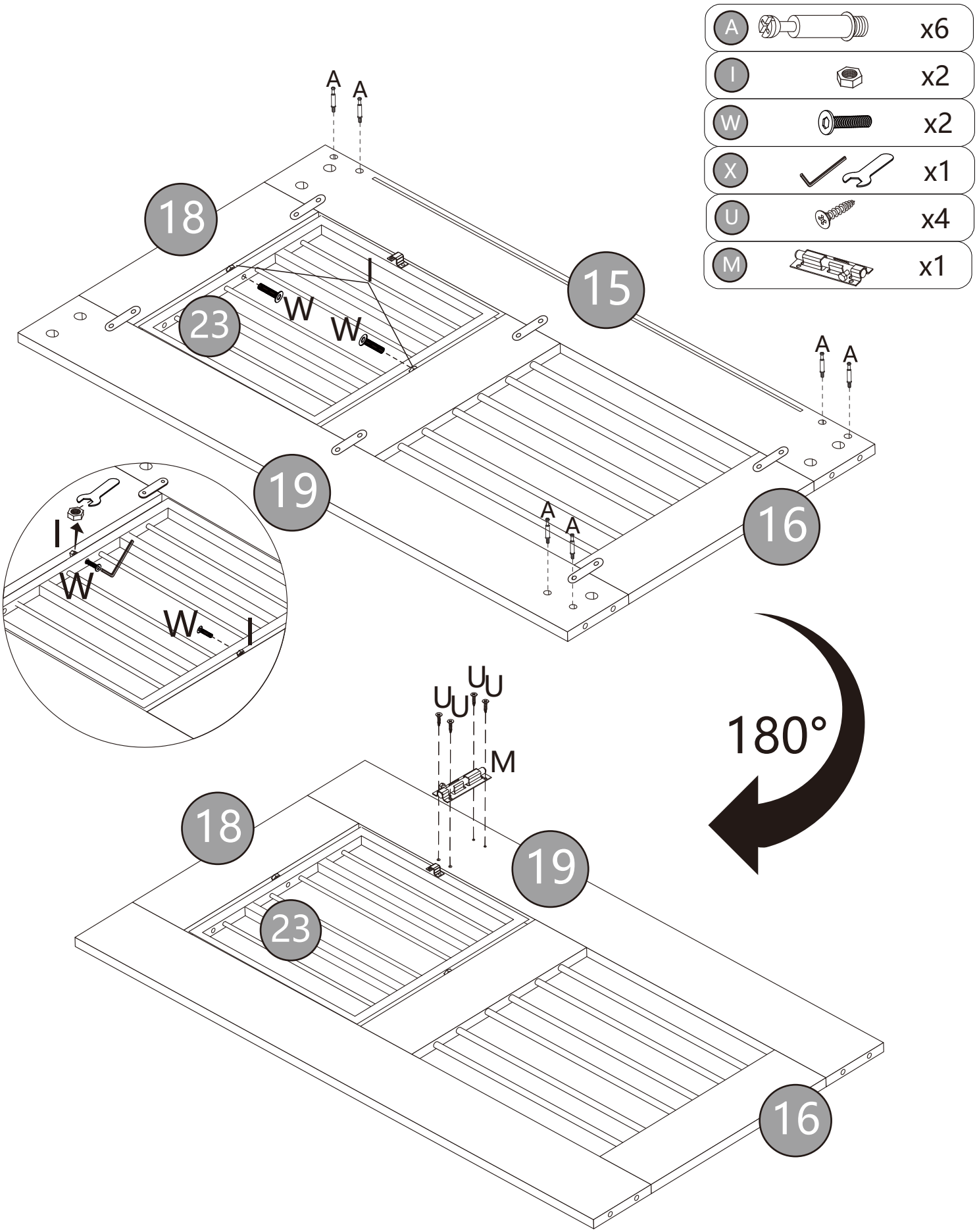
A x6
I x2
W x2
X x1
U x4
M x1
A
A
18
I
W
W
23
15
A
A
19
16
A
A
I
W
W
I
U
U
U
U
M
180°
18
19
23
16

STEP10

B x6

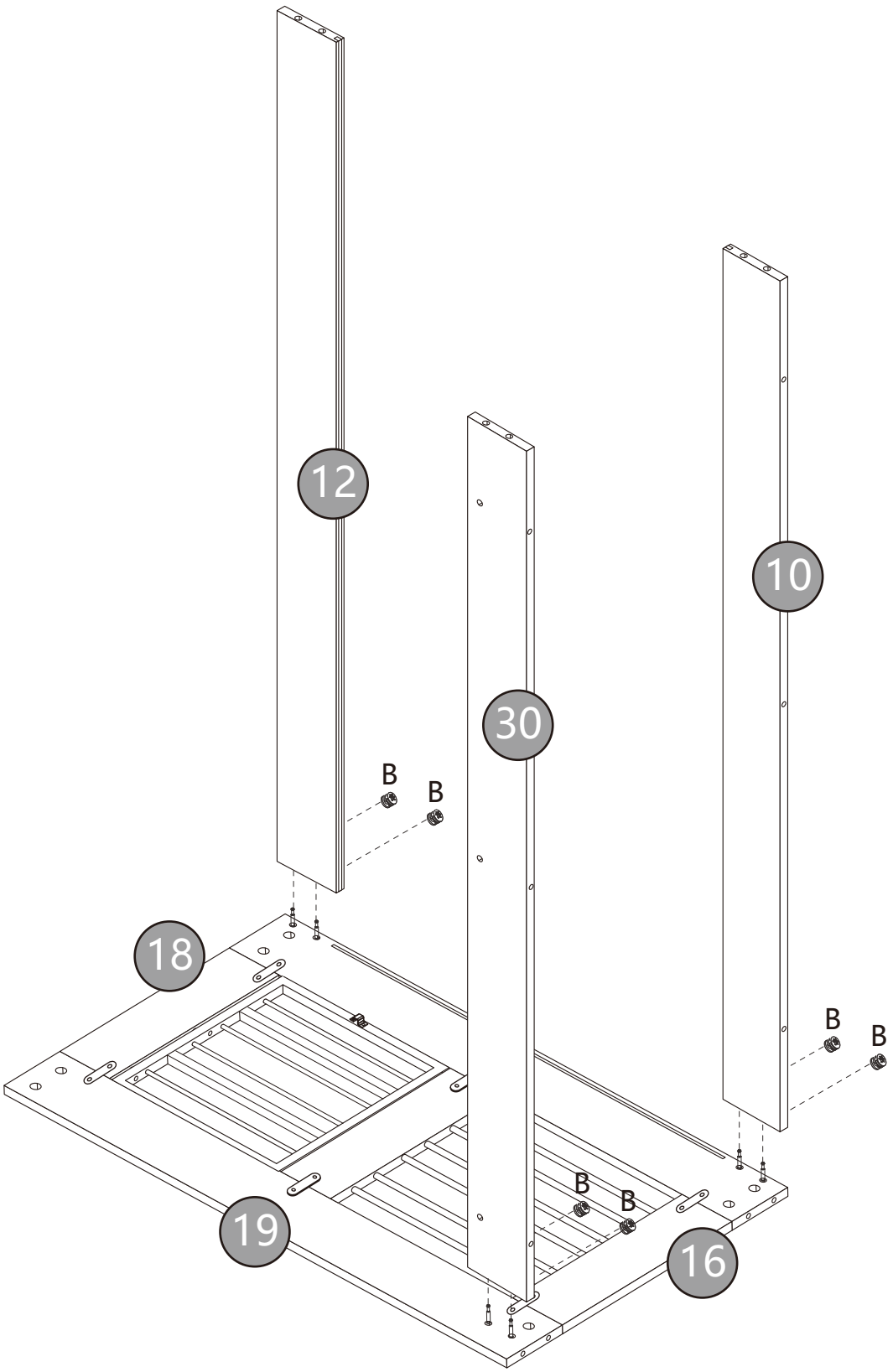

STEP11

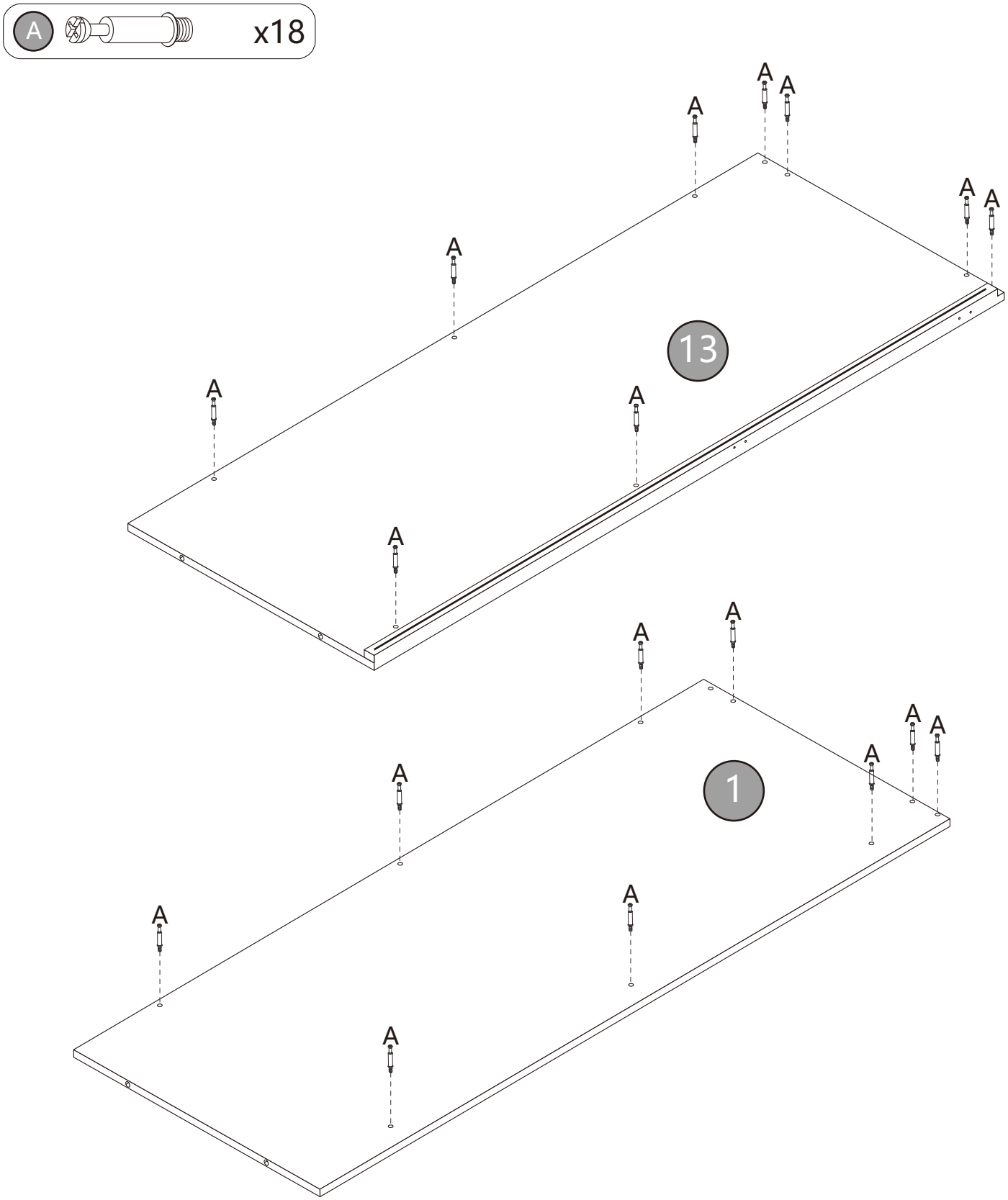

STEP12

B 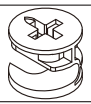 x2

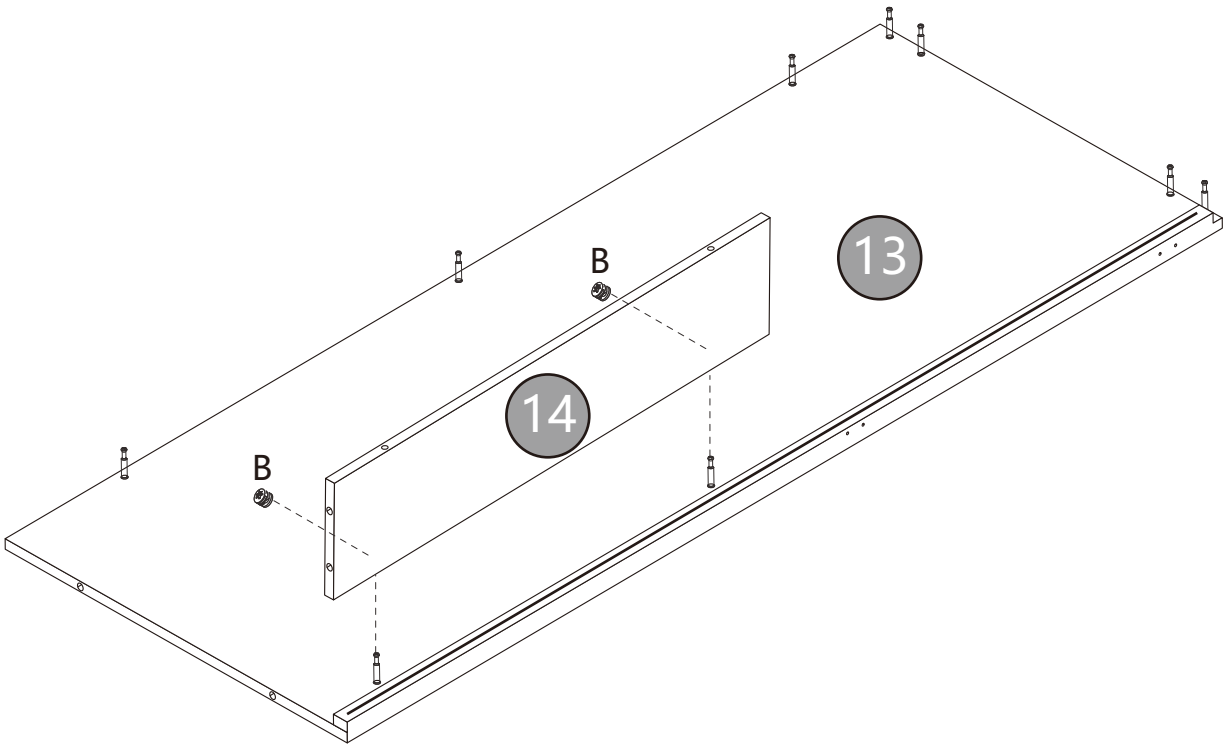

STEP13

B x7

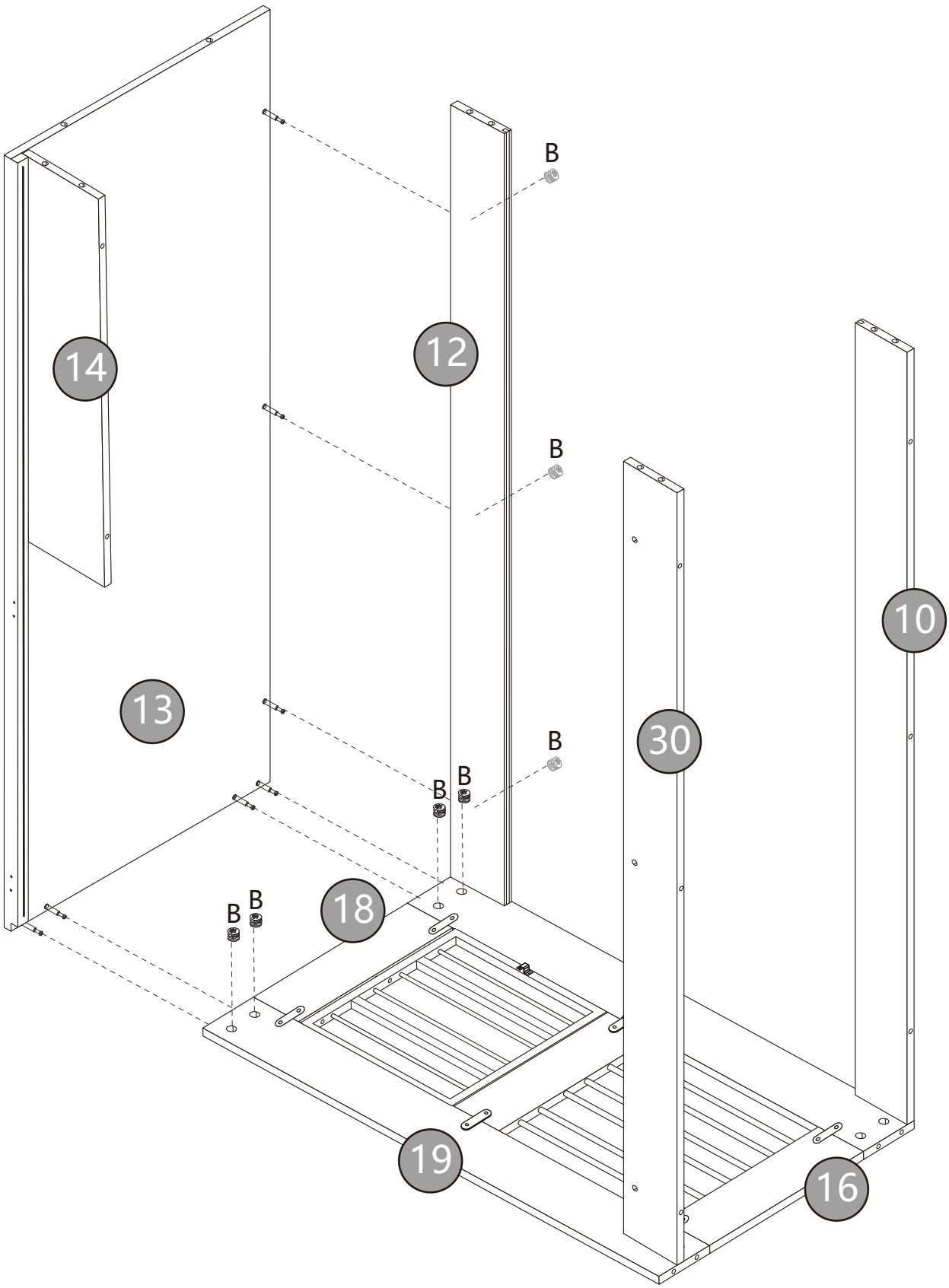

STEP14

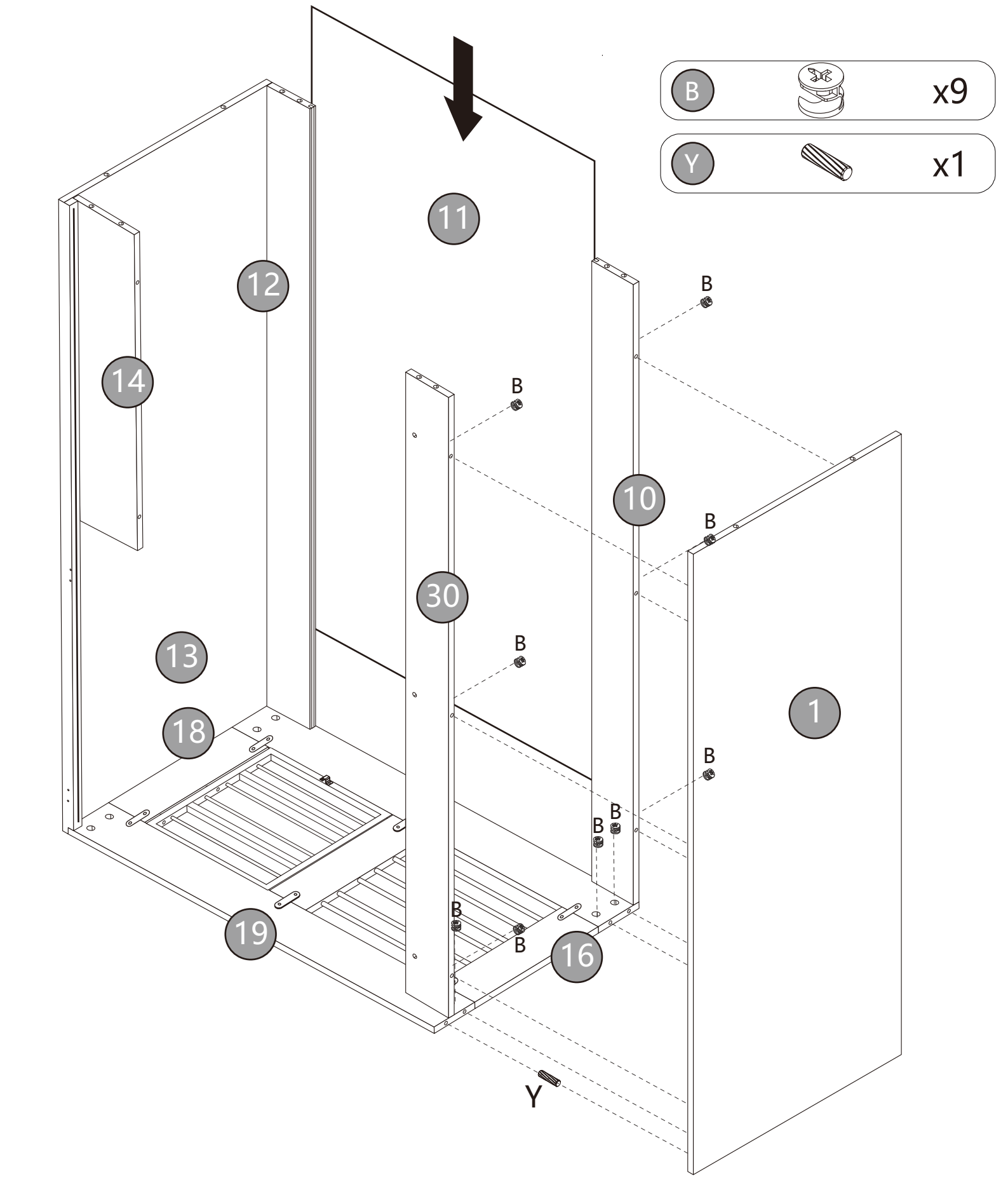

STEP15

B 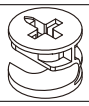 x10

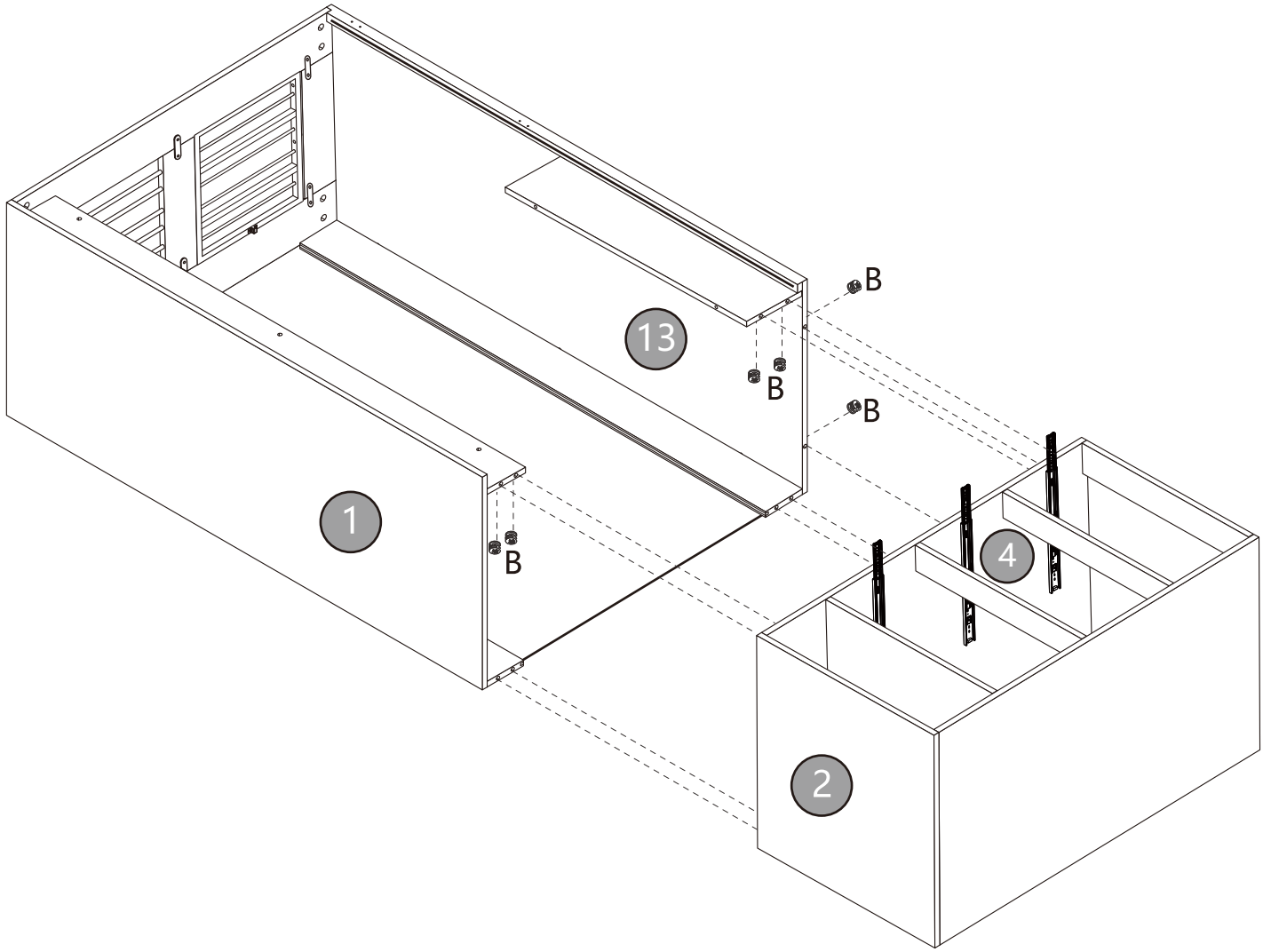

STEP16

A	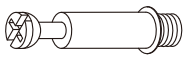	x12
B	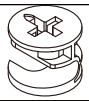	x12
P2		x6
L	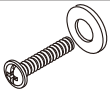	x6
Q	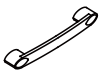	x3
D		x12
C		x12

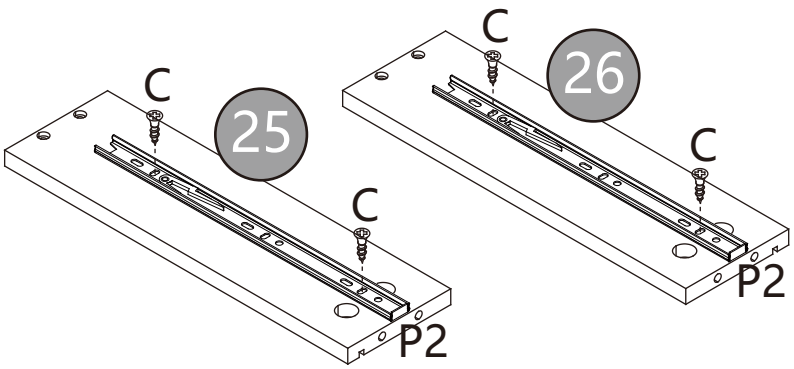



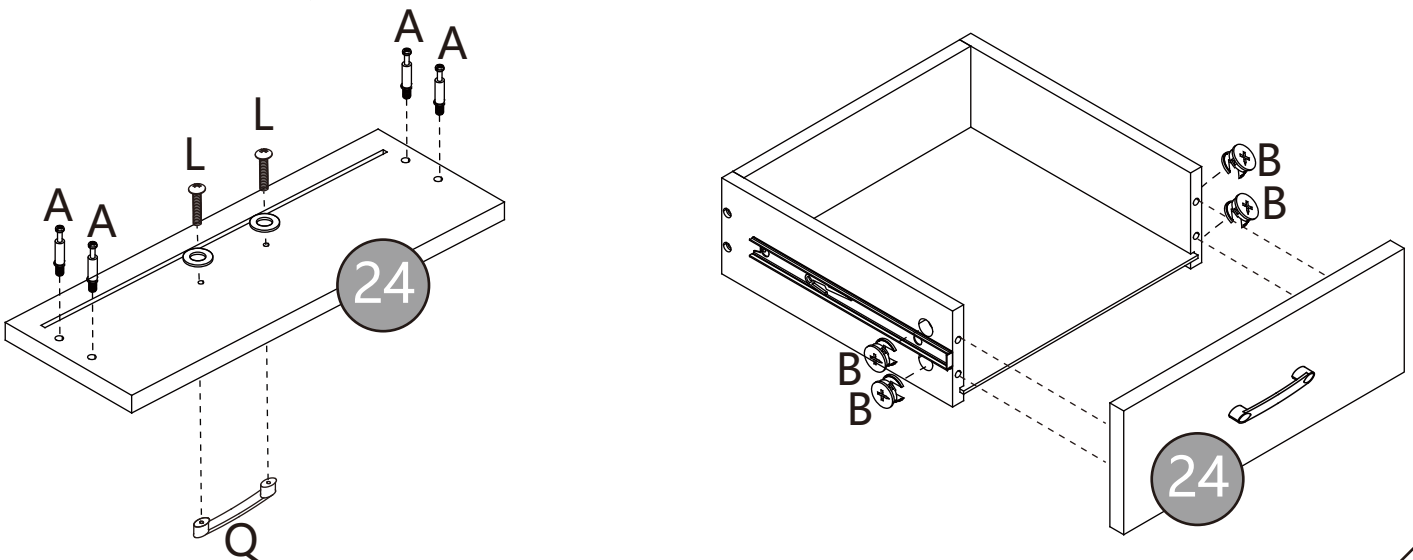

x3

STEP17

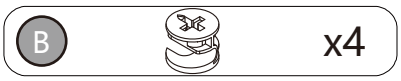

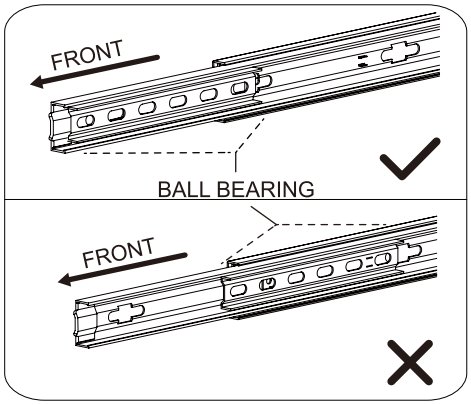

REMARK:Simply push the ball bearing cart all the way to the end of the slide(in bothsides), and align the slide runners on the drawer with the unit and push it carefully inside until it stops.

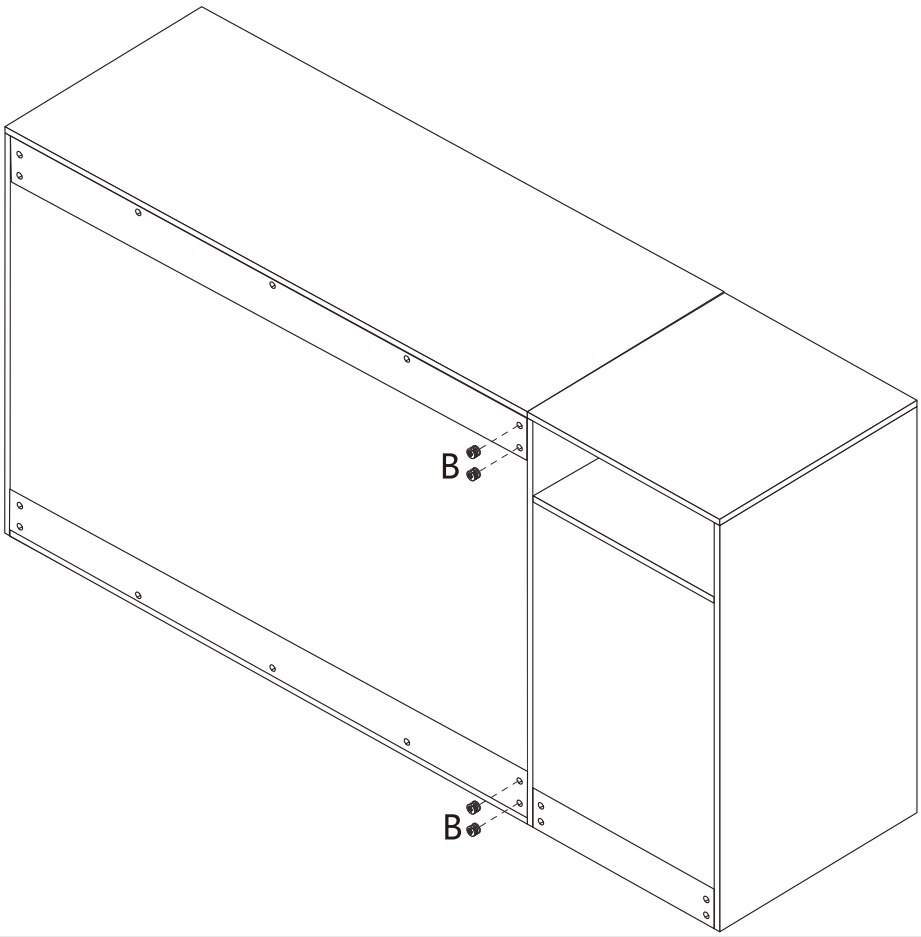

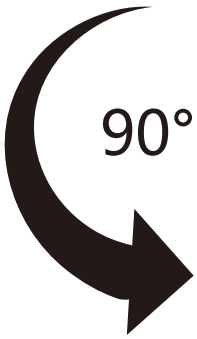

STEP18

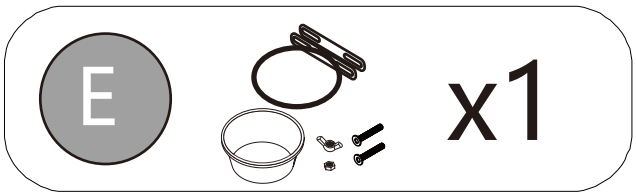

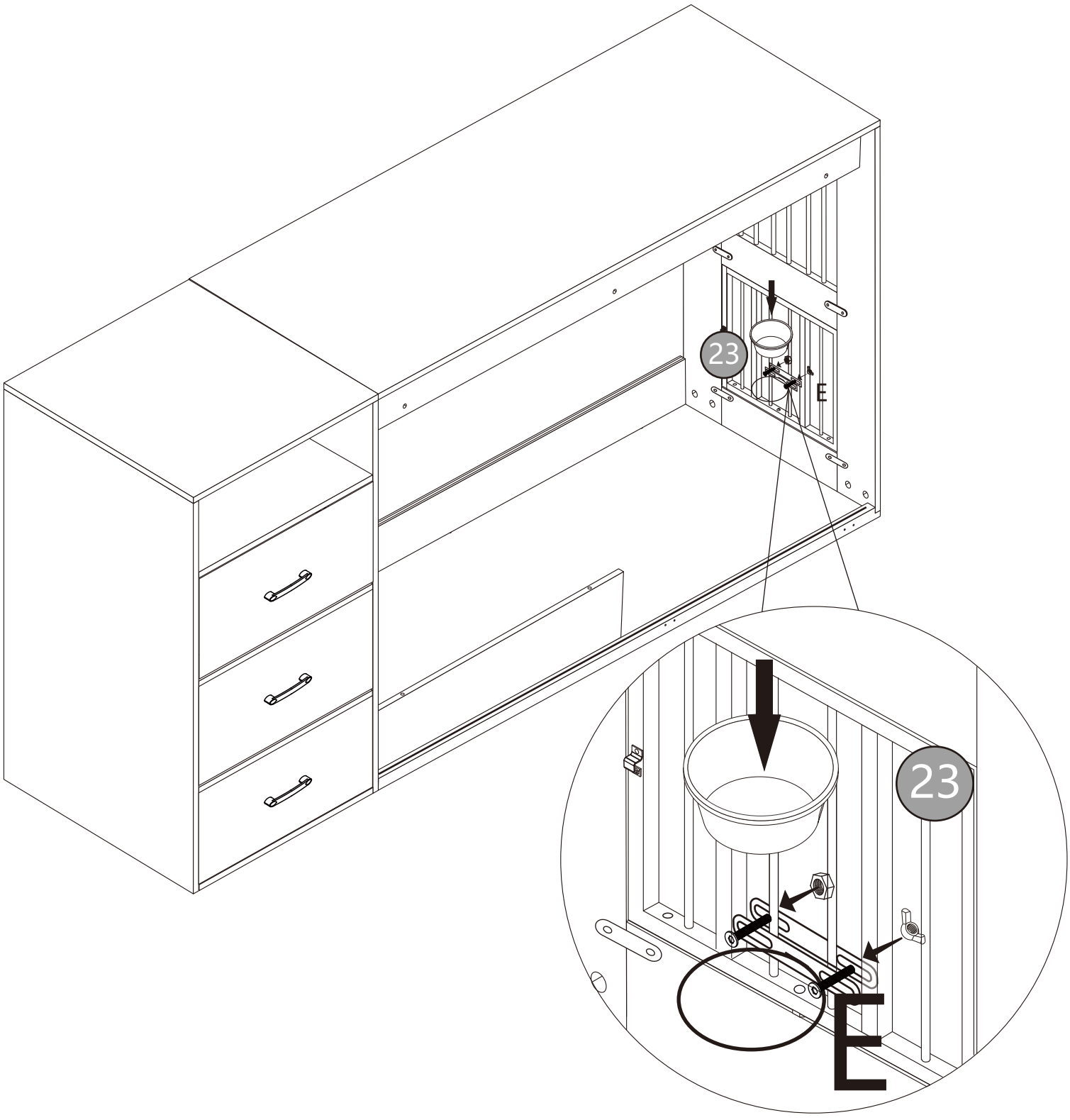

STEP19

H x4

W x1

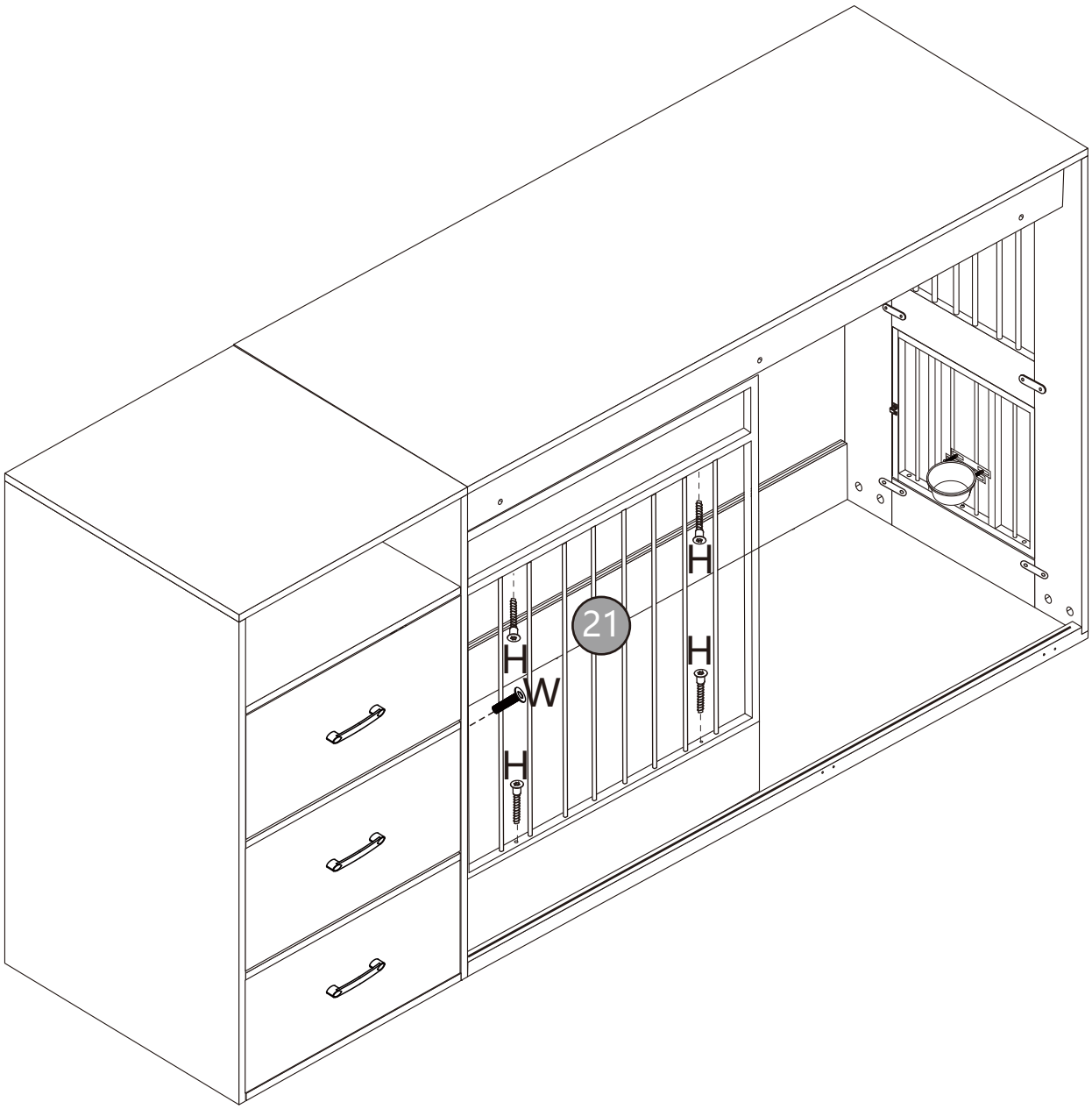

STEP20

G x3

K x3

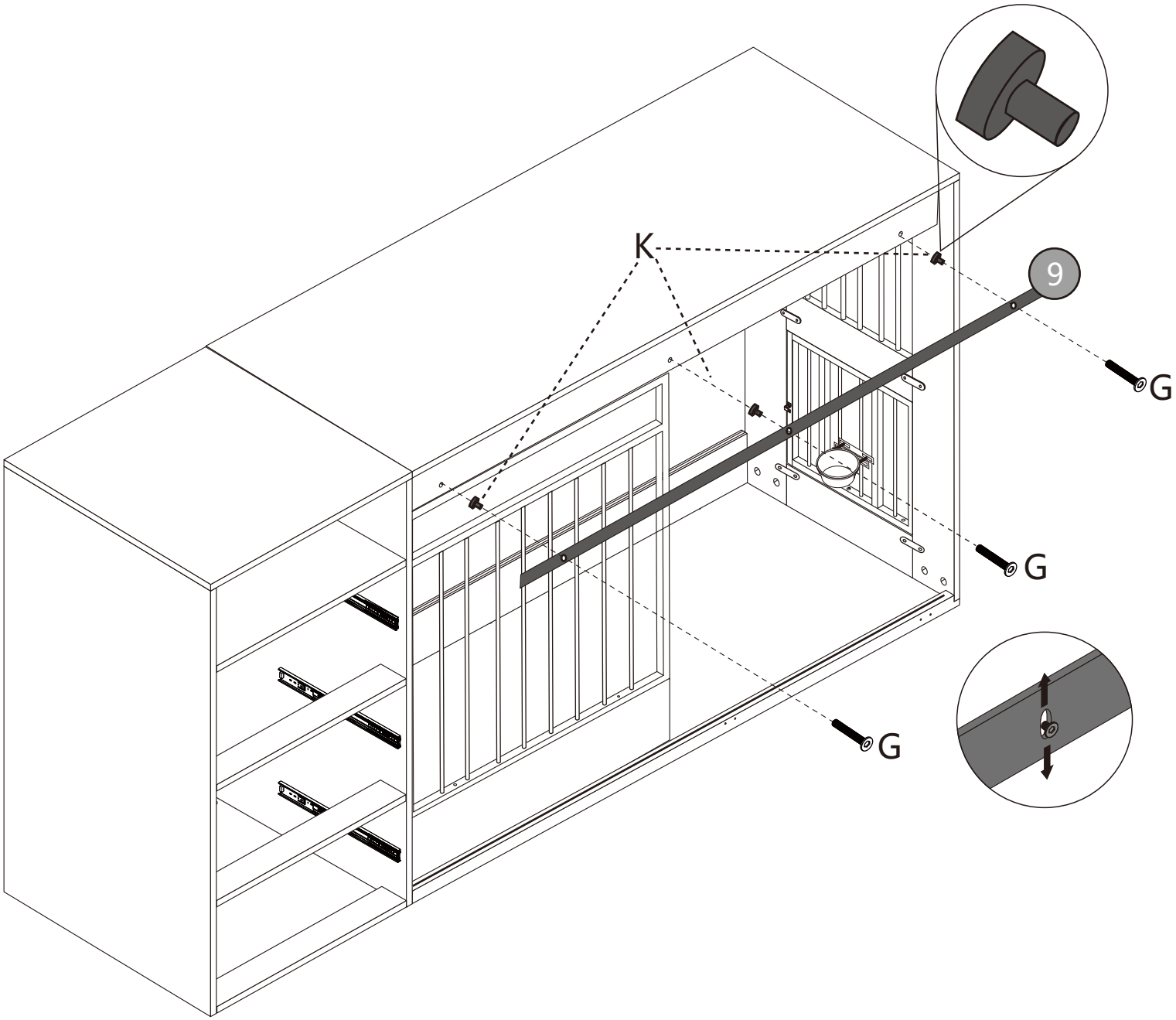

STEP21

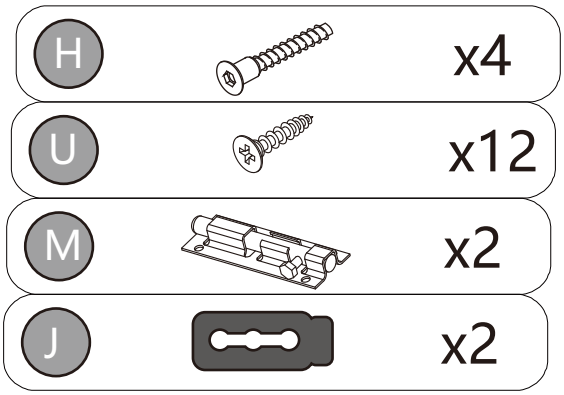

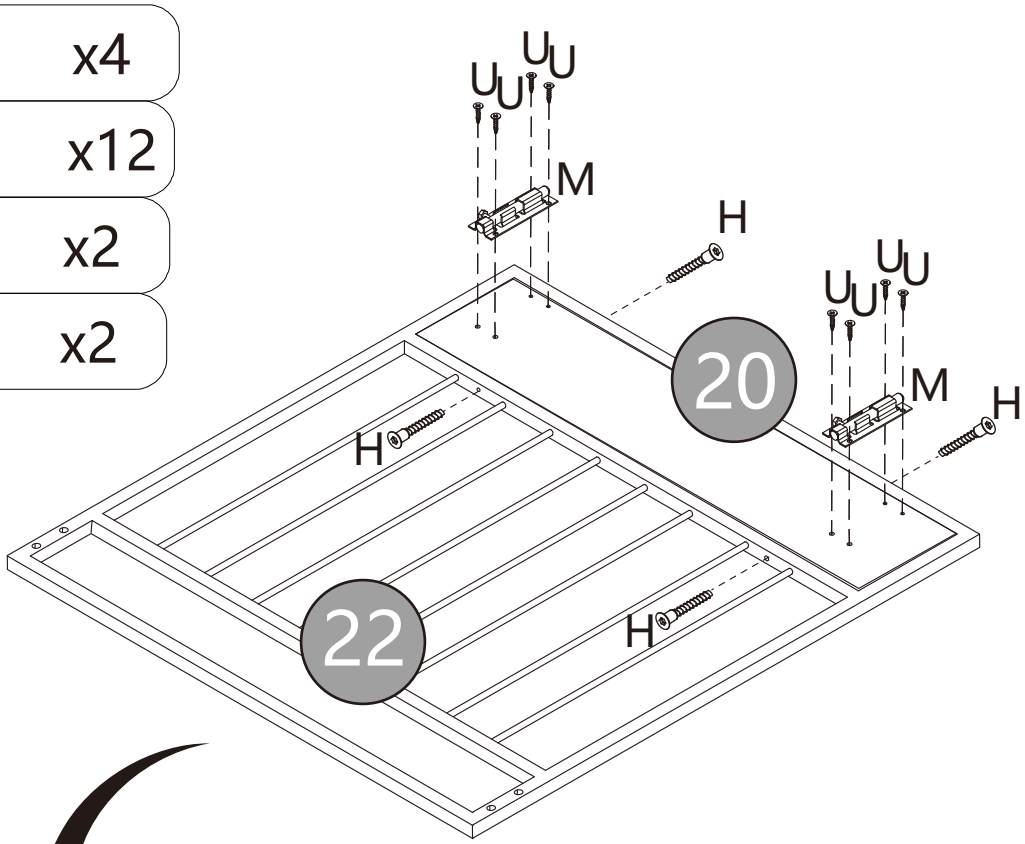

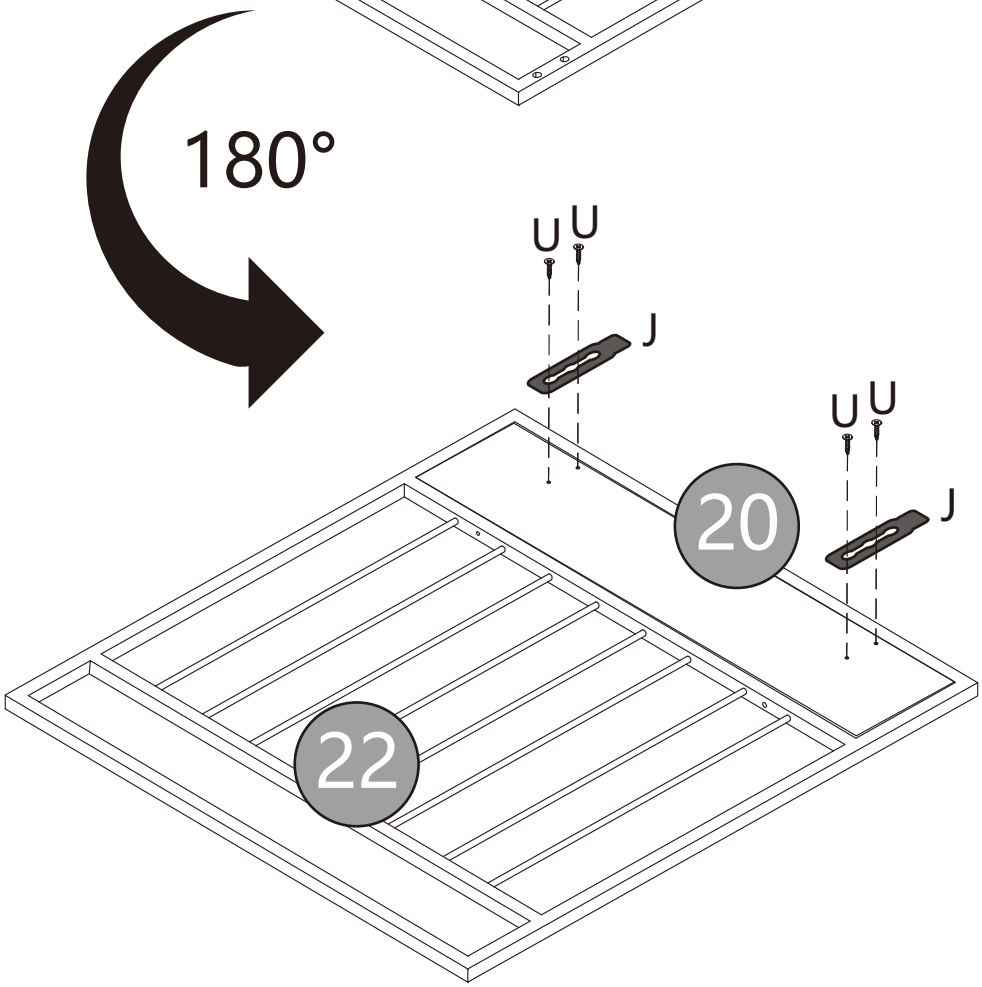

STEP22

F x4

V x1

N x2

U x4

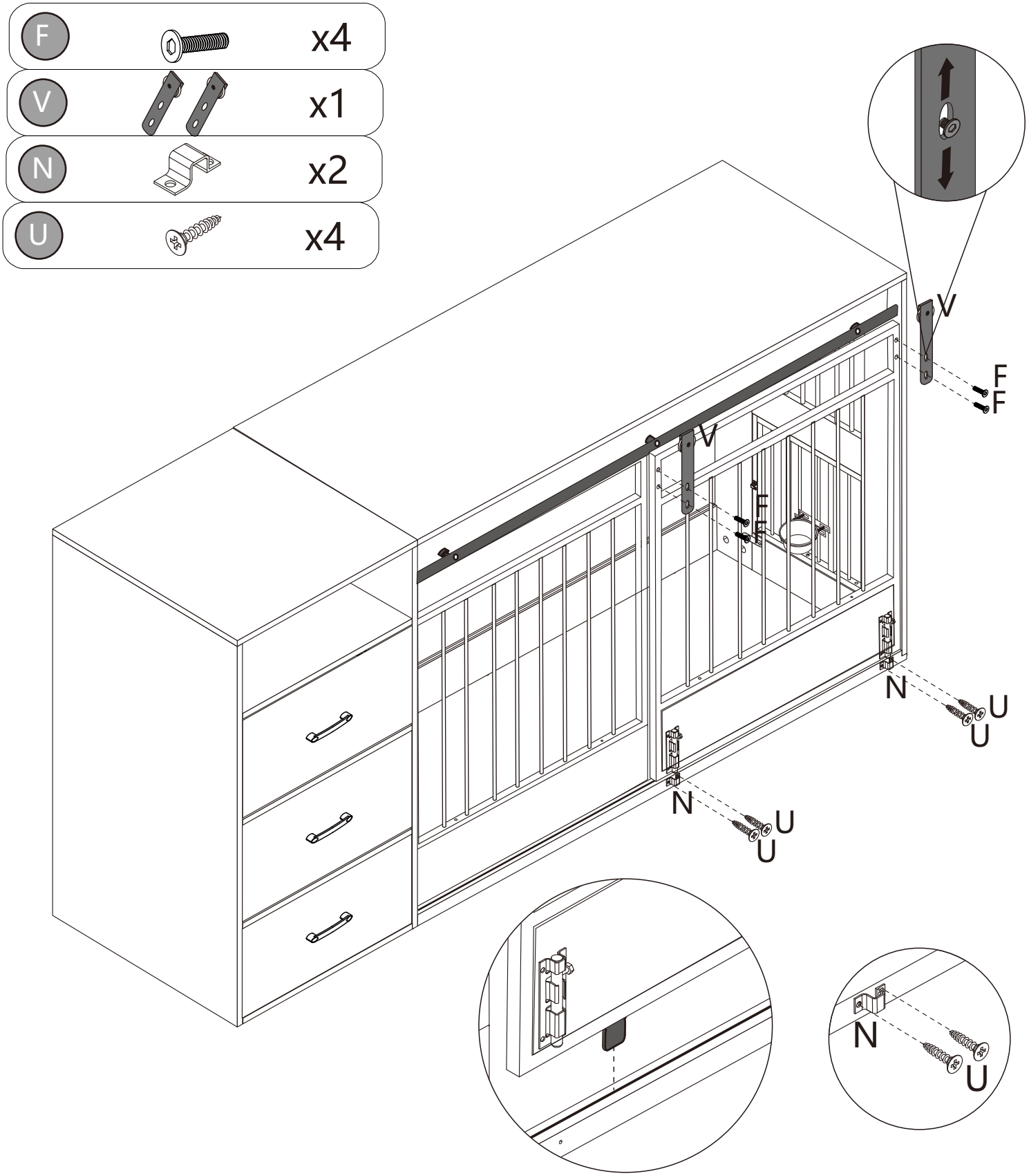

Please make sure that the iron sheet #J is inside the track.

STEP23

C		x2
O		x1
S	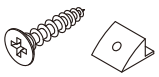	x16

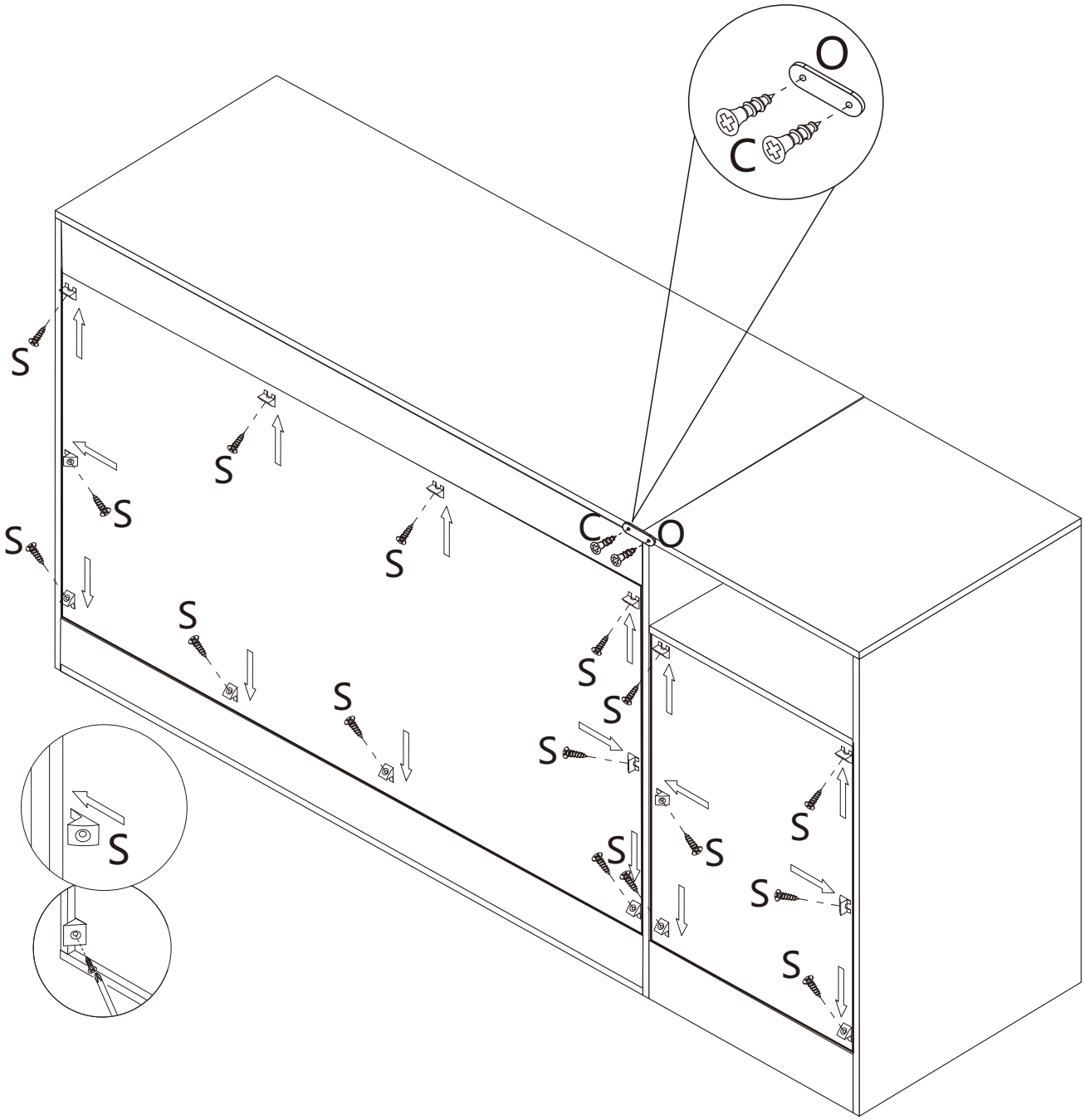

STEP24

