Assembly Instructions

Caution : You must read this before you proceed

Care & Maintenance

- Not for commercial use. For residential use only.
- Do not put hot items directly on furniture surface.
- Do not clean furniture with harsh cleansers or polish.
- Do not place furniture under direct sunlight.
- Do not place furniture near heating or cooling vents.
- Do not write on furniture without a padded barrier to protect the surface.
- Do not place furniture outside . For indoor use only.
- Stains may be removed with mild soap solution and damp cloth.
- Children should not climb or jump on the furniture.
- Dust and pick-up spills using a clean, non-colored, lint-free cloth.

King Bed

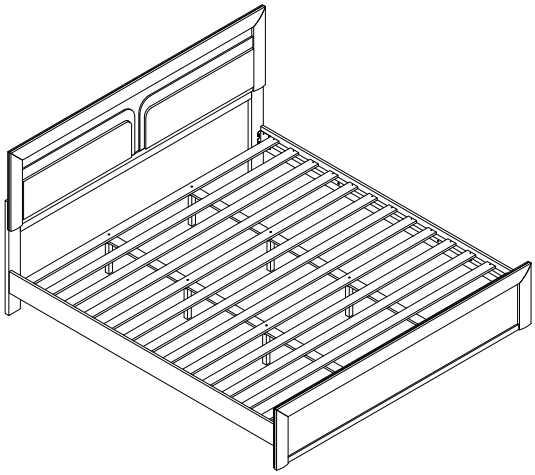



WARNING
STRANGULATION HAZARD.

NEVER place bed near windows where cords from blinds or drapes may strangle a child.

NEVER suspend strings over bed.

NEVER place items with a string, cord, or ribbon, such as hood strings or pacifier cords, around a child's neck. These items may catch on bed parts.

ALWAYS follow assembly instructions.

WARNING!
Not intended for children under the age of six.INFANTS HAVE DIED FROM BECOMING ENTRAPPED IN BEDS. Openings in and between bed parts can entrap the neck and head of a small child. NEVER use bed for child under the age of six.

The mattress must be appropriately sized for the bed. If the mattress is undersized, dangerous gaps can exist and a person can become entrapped or entangled in the frame and suffocate.

NOTE: This Bed is NOT a TOY.
Keep your child/children at bay during the assembley process.
The BED is HEAVY.
To prevent injury to yourself or damage to the product a mininium of two adults are required whenever moving or lifting it.

Parts List

Label	Picture	Description	QTY
A	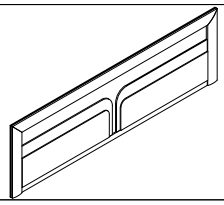	Headboard	1
B	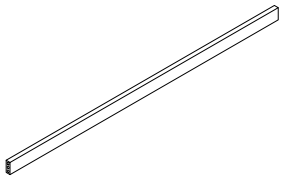	Headboard Bottom	1
C		Headboard Leg -L	1
D		Headboard Leg -R	1
E	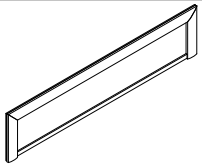	Footboard	1
F	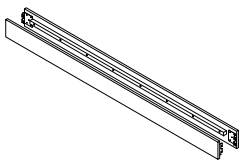	Side Panel	2
G	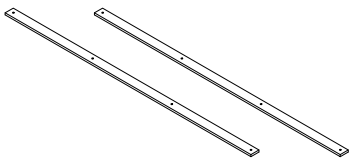	Center Rail	2

H	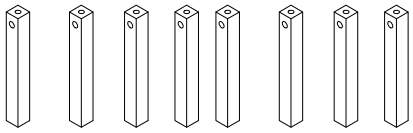	Center Leg	8
I	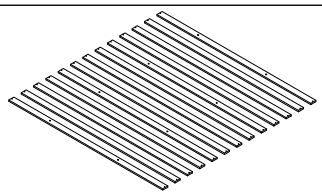	Slats	13 (2Sets)

Hardware

Label	Picture	Description	QTY
①		M4 Allen Wrench (Long Ball Head)	1
②		M5 Allen Wrench	1
③	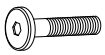	Bolt (M6x35mm)	6
④	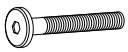	Bolt (M6x50mm)	2
⑤		Bolt (M8x20mm)	8
⑥	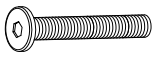	Bolt (M8x70mm)	8
⑦	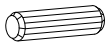	Wood Dowel(10x30mm)	4
⑧		Flat Washer (M6)	6
⑨		Spring Washer (M6)	2
⑩		Bend Washer (M6)	2
⑪		Barrel Nut M8	8
⑫		Adjuster Screw	8
⑬	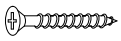	Screw (M4x30mm)	26
⑭		Screwdriver (Not provided)	1

Assembly Preparation

Before Begining Assembly:

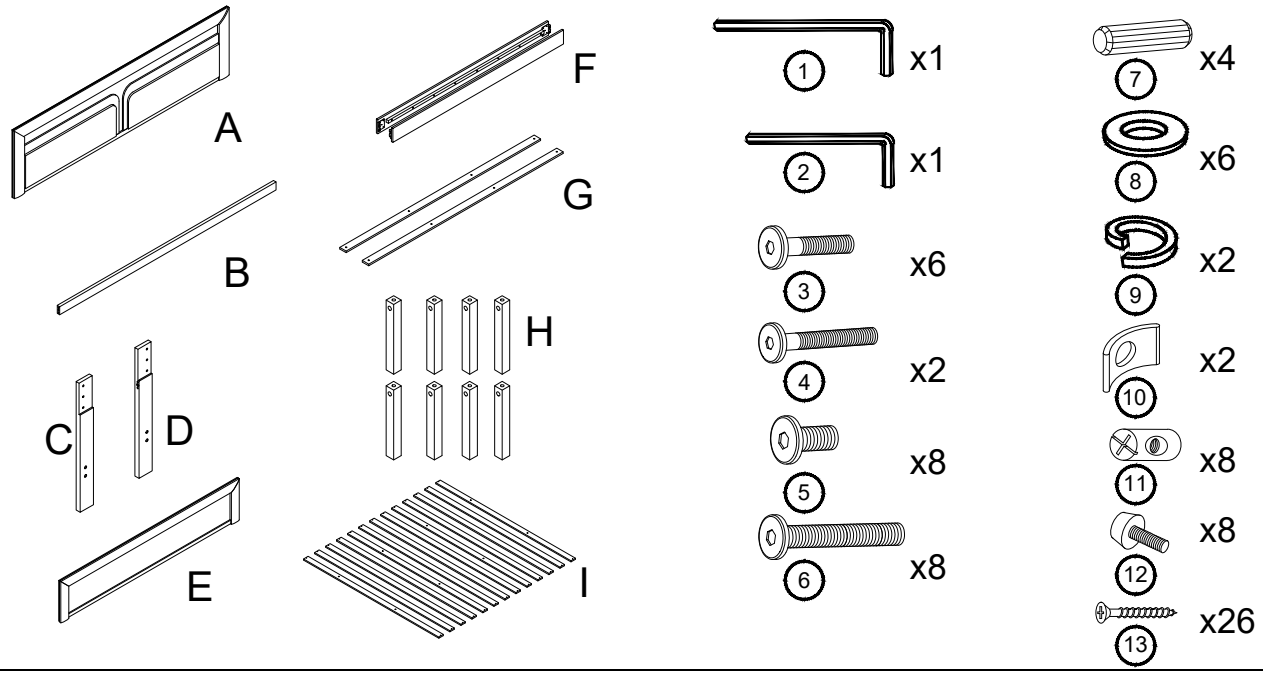

- Read instructions, cover to cover-
- Have 2 adults on hand for assembly-
- Do not assemble on flooring or carpet-
- Assemble on a clean non-marring surface (packing foam)-
- Save all packaging until finished-

Assembly Steps

Overview

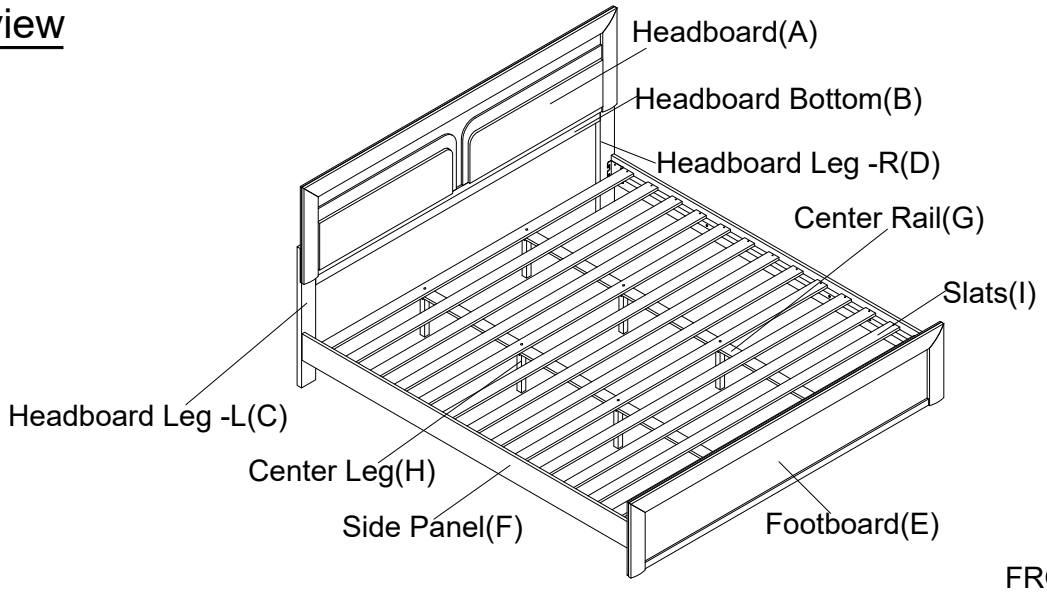

FRONT FACING

This Bed has multiple parts and may require up to 30 minutes to assemble. To give you an overview of the Bed parts, the above picture is provided to help you put the various parts into perspective. Please read through the instructions below to familiarise yourself with the parts and steps before assembly.

Step 1

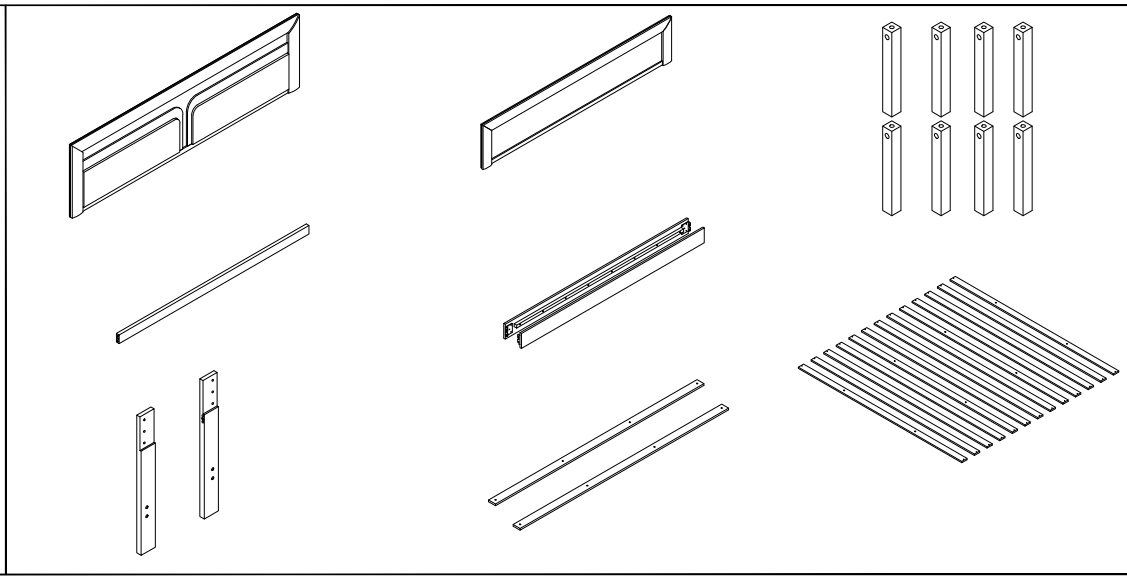

Unpack and place all parts on a clean,non-marring surface.

Step 2

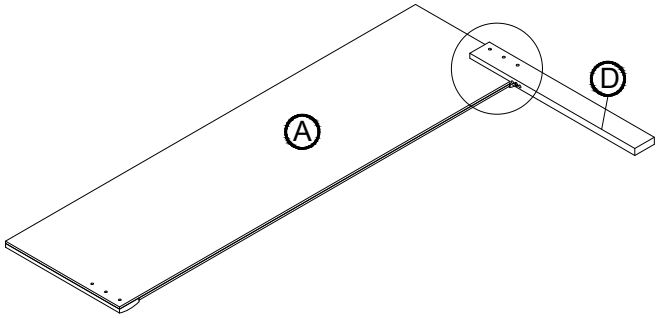

①	M4 Allen Wrench (Long Ball Head)	1
③	Bolt (M6x35mm)	3
⑧	Flat Washer (M6)	3

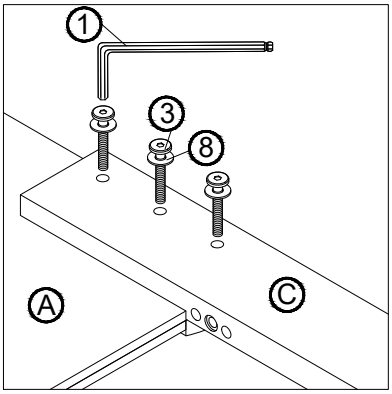

Place the Headboard (A) and Headboard Leg-L (C) with its inner side face skywards onto a clean, soft surface to avoid any scratches or damages to the product.
Attach Headboard Leg-R (D) to Headboard (A) by using Bolts (③), Flat Washers (⑧) with M4 Allen Wrench (①).

Step 3

①	M4 Allen Wrench (Long Ball Head)	1
④	Bolt (M6x50mm)	2
⑦	Wood Dowel (10x30mm)	4
⑨	Spring Washer (M6)	2
⑩	Bend Washer (M6)	2

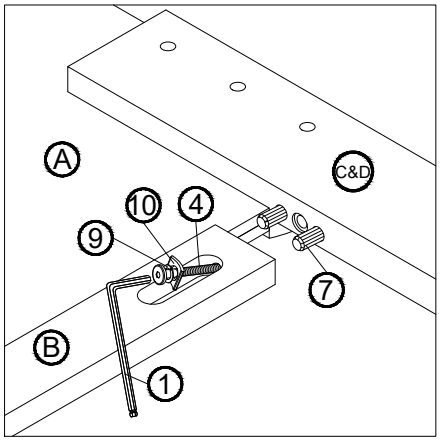

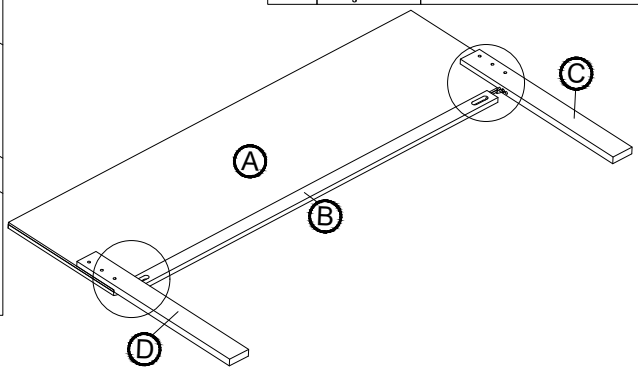

Attach Headboard Bottom (B) to Headboard Leg L&R (C&D) by using Wood Dowel(⑦) Bolts (④), Spring Washer M6(⑨),Bend Washer(⑩)with M4 AllenWrench(①)

Step 4

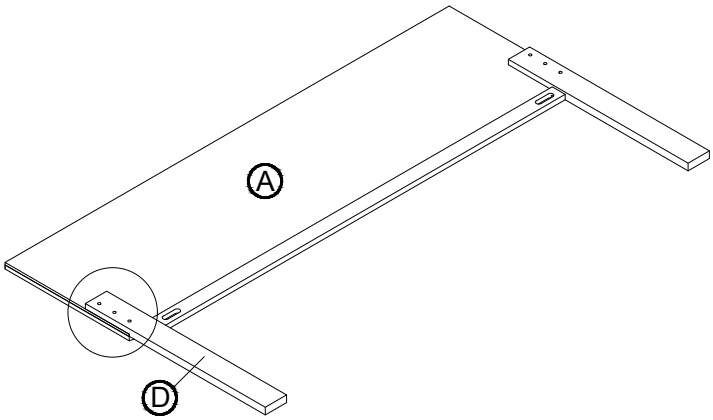

①	M4 Allen Wrench (Long Ball Head)	1
③	Bolt (M6x35mm)	3
⑧	Flat Washer (M6)	3

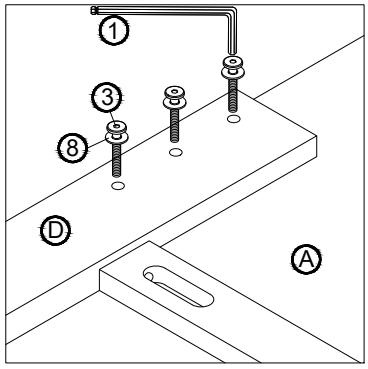

Attach Headboard Leg-R (D) to Headboard (A) by using Bolts (③), Flat Washers (⑧) with M4 Allen Wrench (①).

Step 5

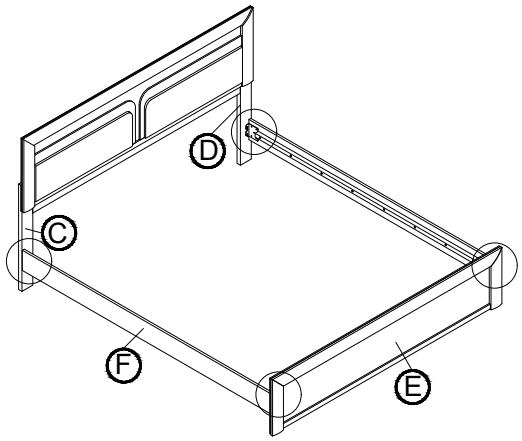

②	M5 Allen Wrench	1
⑤	Bolt (M8x20mm)	8

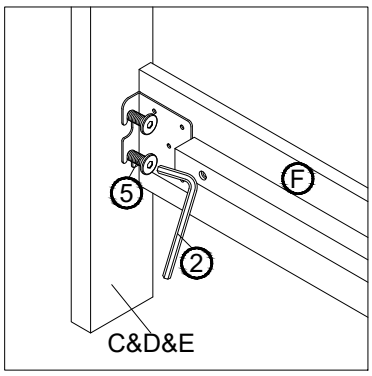

With the help from you partner, stand the assembled Headboard (A)& Foorboard(E) standing as shown in picture above.
Lightly loose the bolts on Headboard L&R (C&D) and Footboard (E),then attach the Side Panel (F) to the assembled Headboard (A) and Footboard (E),tighten the bolts using with M5 Allen Wrench(②).DO NOT FULLY TIGHTHEN BOLTS.

Step 6

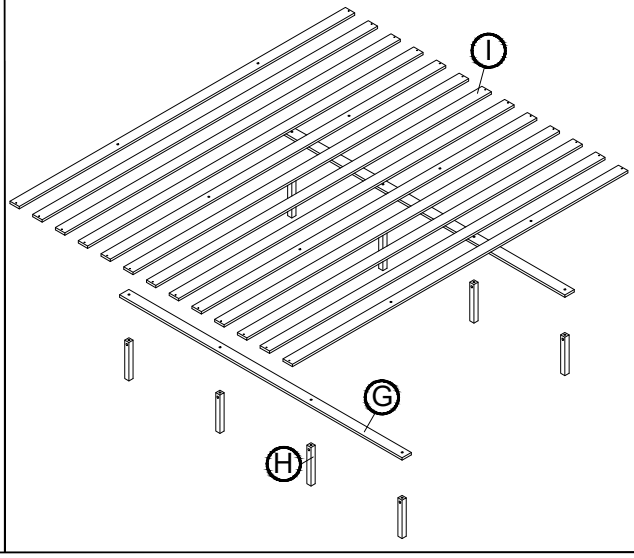

②	M5 Allen Wrench	1
⑥	Bolt (M8x70mm)	8
⑪	Barrel Nut M8	8
⑫	Adjuster Screw	8

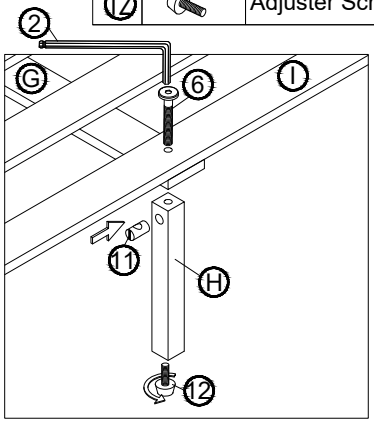

Align the Mounting Position on the Center Rail (G) to the Center Leg (H) and the Slats (I).
Attach the Slats (I) and the Center Rail (G) to the Center Leg (G) and by using Bolts (⑥), Barret Nut M8(⑪)with M5 Allen Wrench(②).
Using Adjuster Screw(⑫)turn into the Center Leg (G)and adjust it to the appropriate height.

Step 10

13		Screw (M4x30mm)	26
14		Screwdriver (Not provided)	1

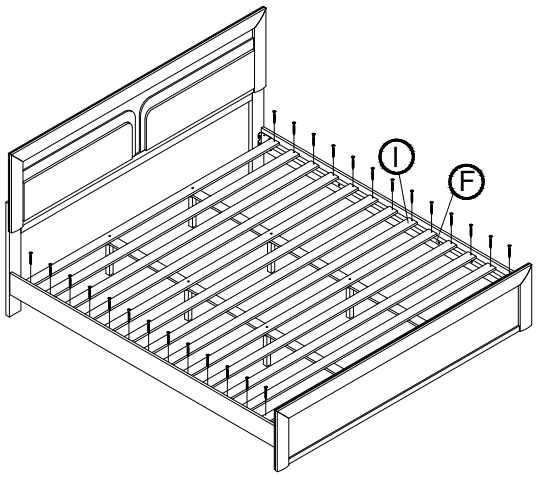

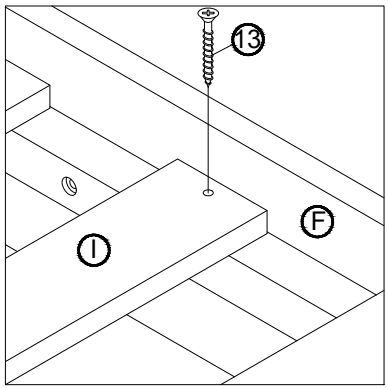

Attach all Slats (I) to the rail on Side Panel (F) by using Screws (13) and Screwdriver (Not Provided).

Step 11

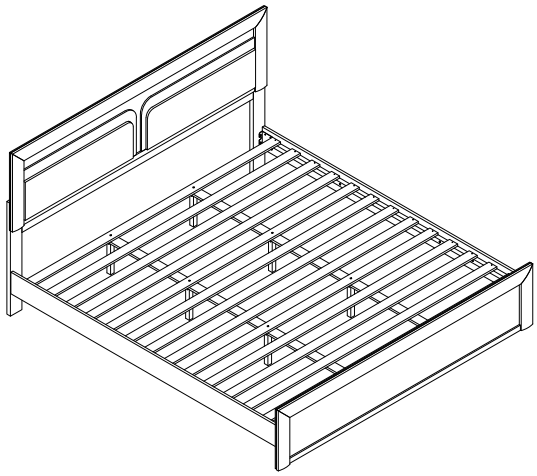

Place the Bed on a LEVEL SURFACE.
Inspect it and make sure all parts are adequately connected.
Don't push too hard, shake on the bed.
This would help to align all the parts at all the joint areas.

CAUTION 1: When tightening these screws, tighten sequentially.
DO NOT tighten any screw fully and then towards the next one.
This would cause the frame to warp.
If there is still wobbles, loosen the screws and execute this same process.DO NOT tighten any screw fully and then towards the next one.
WARNING!! IF BED IS NOT STABLE , IT COULD LEAD TO DAMAGING THE PRODUCT.
Ensure all screws are fully locked into position.
The bed is ready to be used.
Caution 2: This bed can only be used on a flat, level surface.