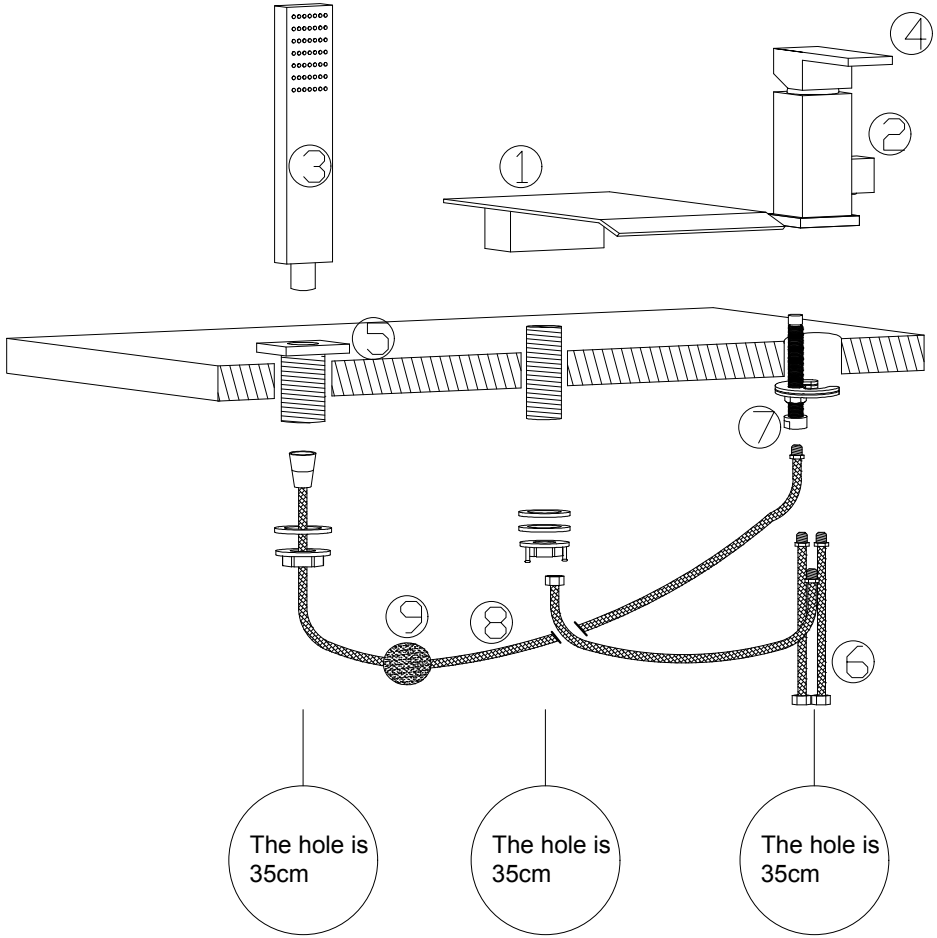

The distance between the mounting parts can be adjusted according to the actual situation

① Tub spout
② BATH and SHOWER switch
③ hand shower
④ Hot and cold water switch
⑤ shower holder
⑥ Hot and cold water inlet pipe
⑦ Connecting pipe
⑧ 1.5m Shower hose
⑨ Gravity ball(251g)

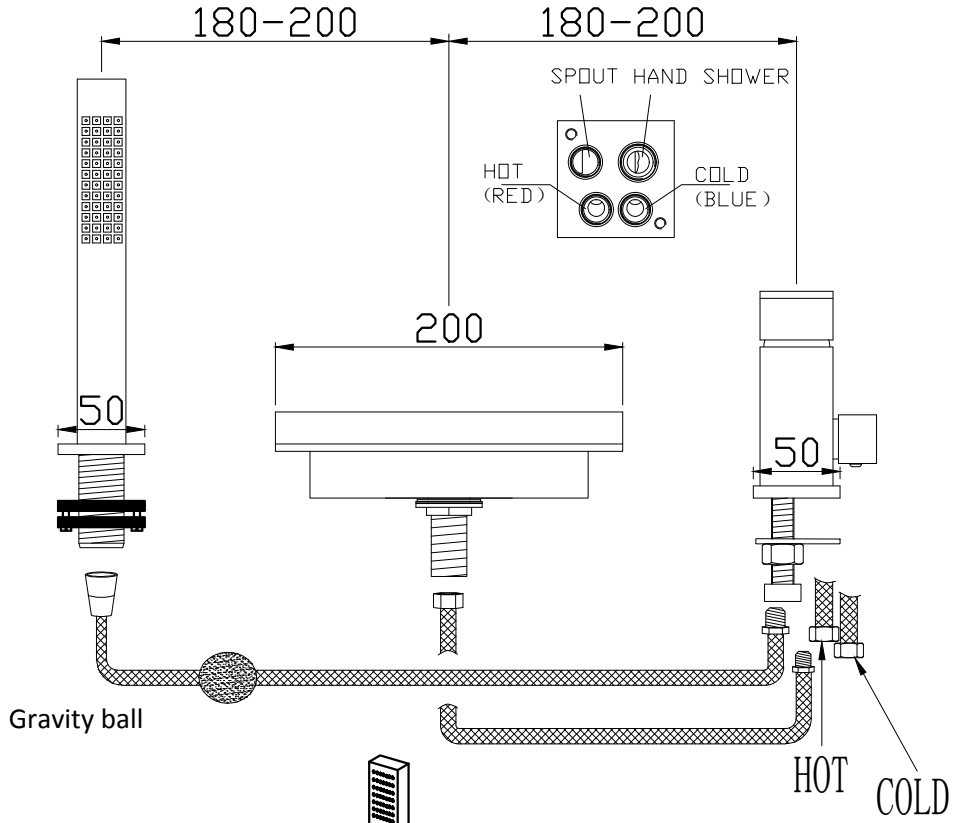

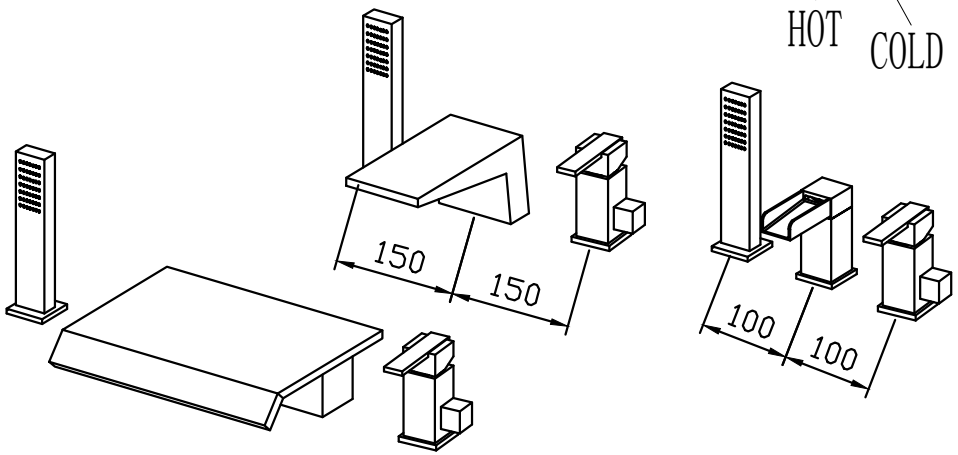

TIPS:

① Red as hot water pipe, Blue as cold water pipe

② Cleaning the hot and cold water inlet pipe to prevent debris from entering the inside, damaging the valve body and affecting the use.INSTALLATION STEPS

1. Take the tub faucet set in the corresponding hole on the bathtub.
   Fix the faucet body to the pipe. And put the base cover over the base.
2. Screw the pipe to the corresponding base
   ① Install the flexible hose and ensure the flexible hoses are hand tightened into place. The flexible hoses are to be fitted into the correct inlets for hot water and for cold water.(DO NOT USE SPANNER TO TIGHTEN AS IT CAN DAMAGE THE O-RING)
   ② Connect another side of the flexible hose to the water supply pipe. Make sure they are to be fitted into the correct outlets for hot water and cold water
   ③ Connect the shower hose and hand shower.
3. Finish