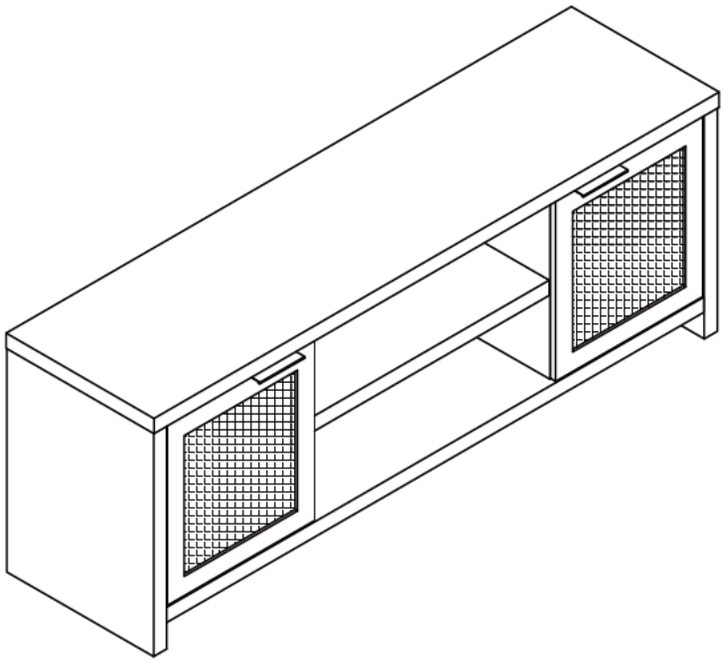

Parts list

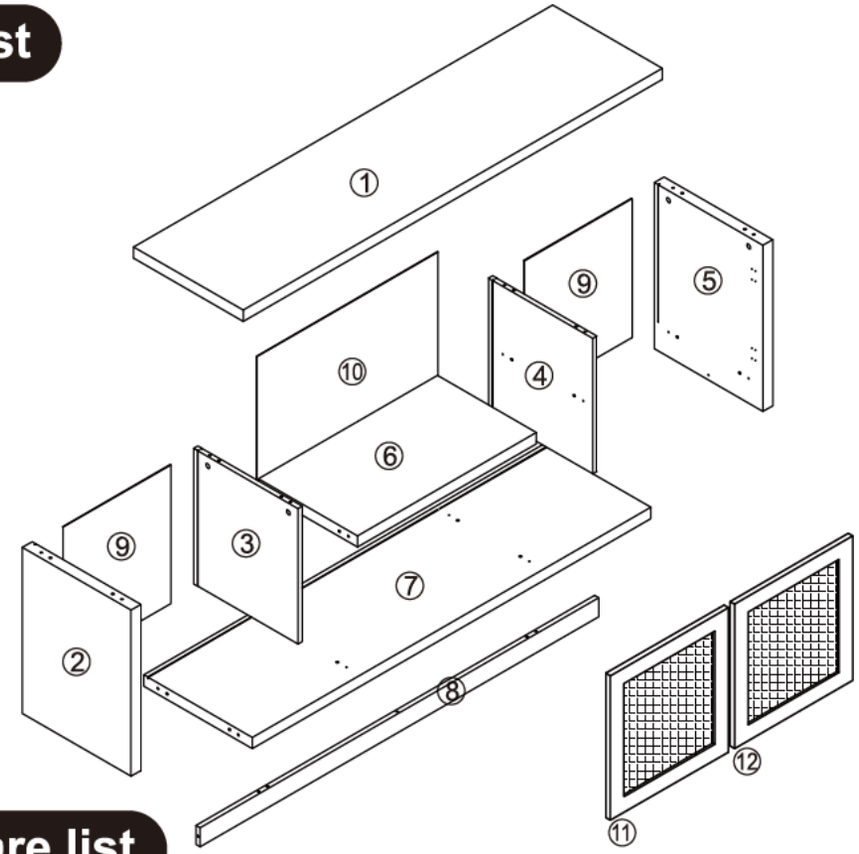

Hardware list

A x21	B x21	C x22 ϕ8*30MM	D x4 M4*50	E x4 M3*12
F x2	G x12	H x12 M3*16	I x4 ϕ26	J x24 M3.5*14
K x21				

Step 1

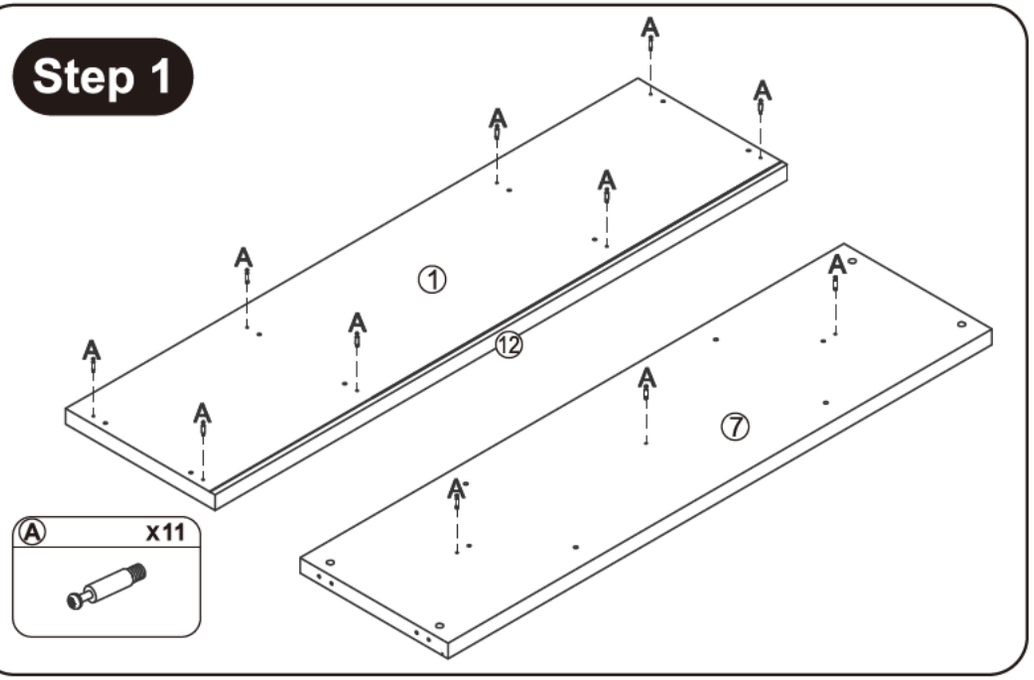

Step 3

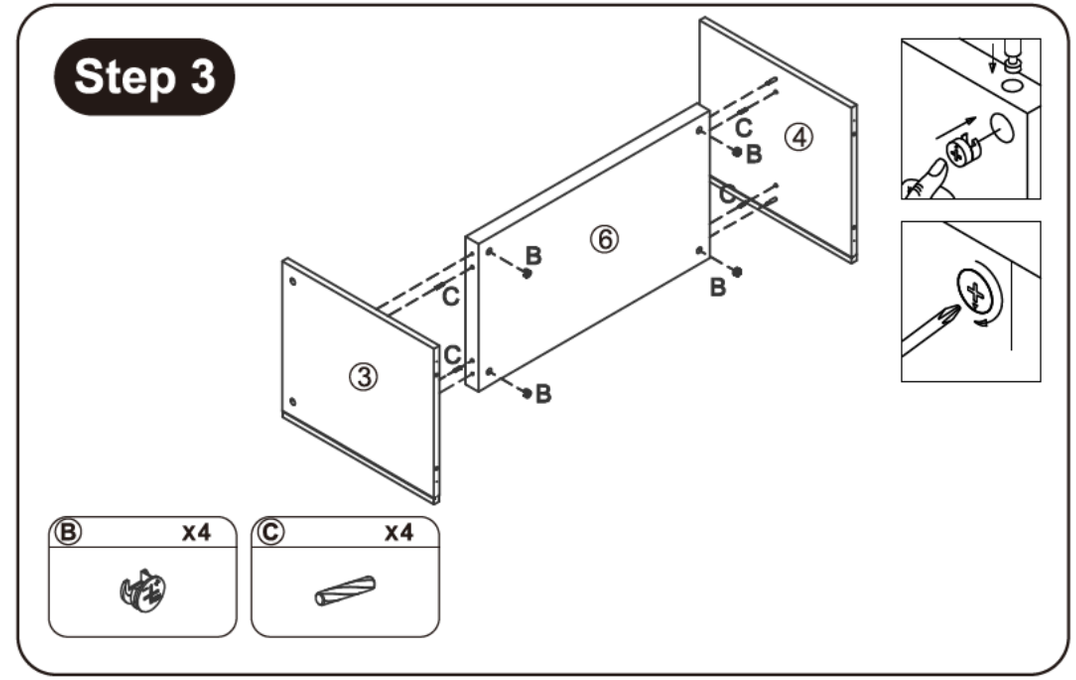

Step 2

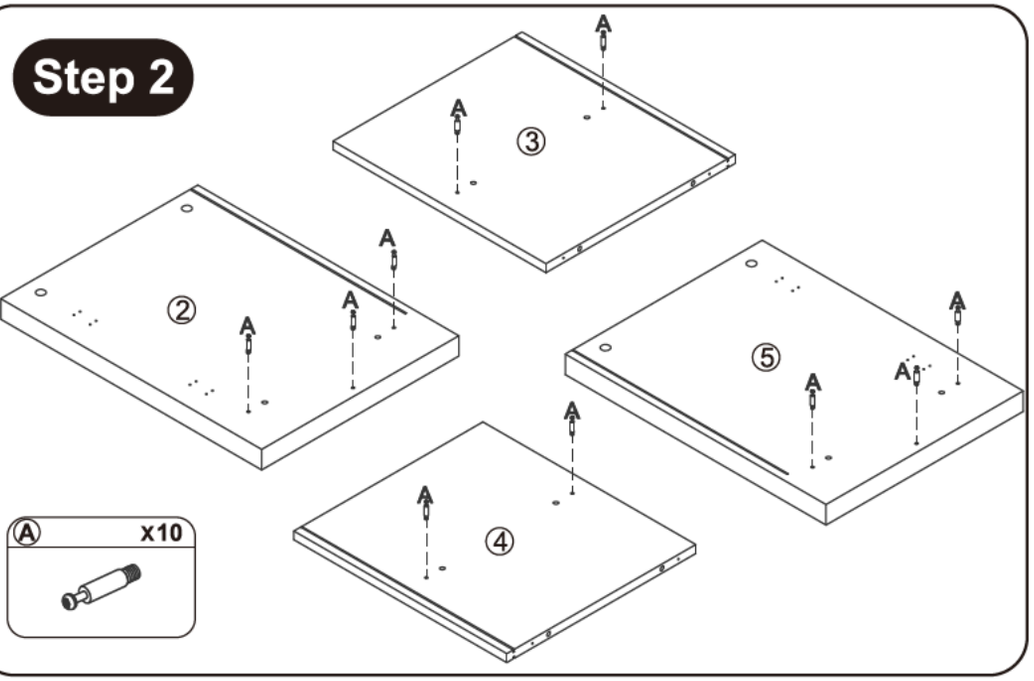

Step 4

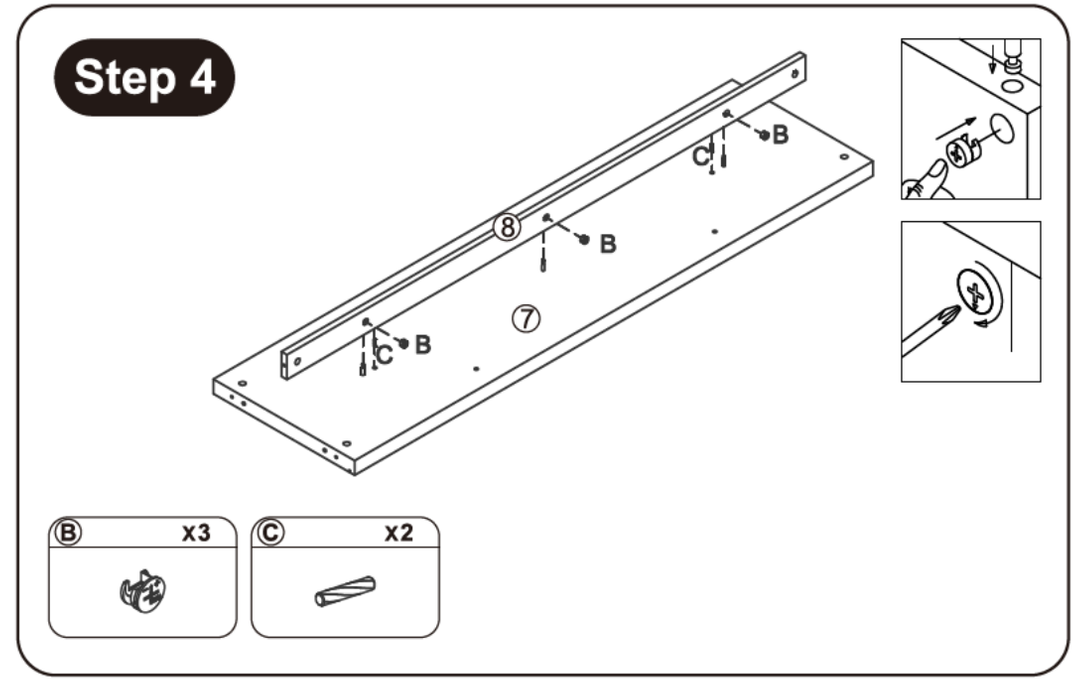

Step 5

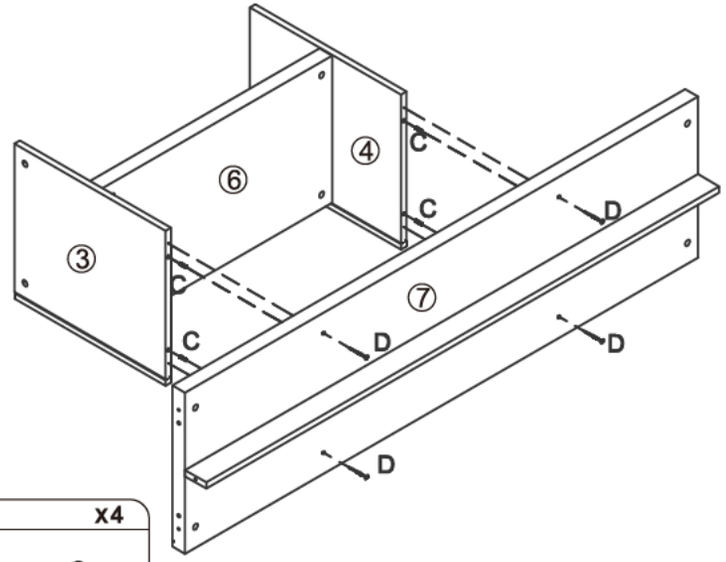

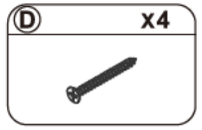

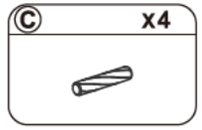

Step 7

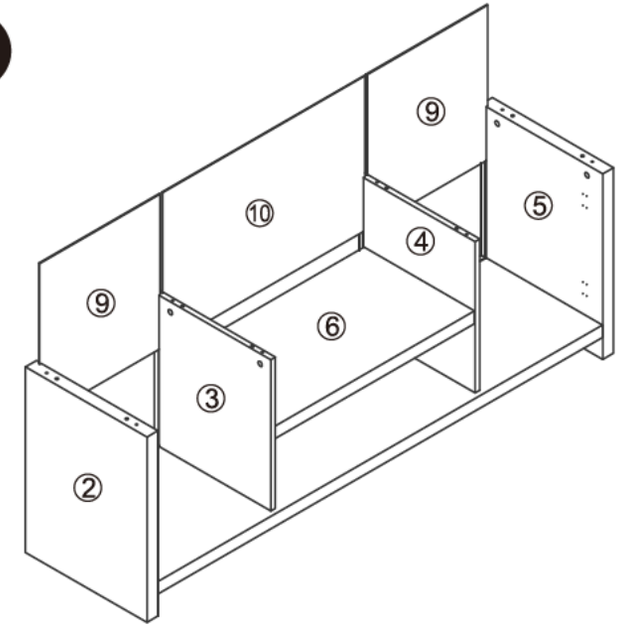

Step 6

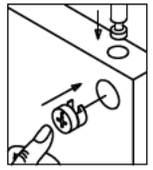

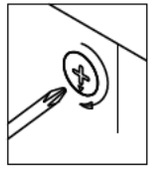

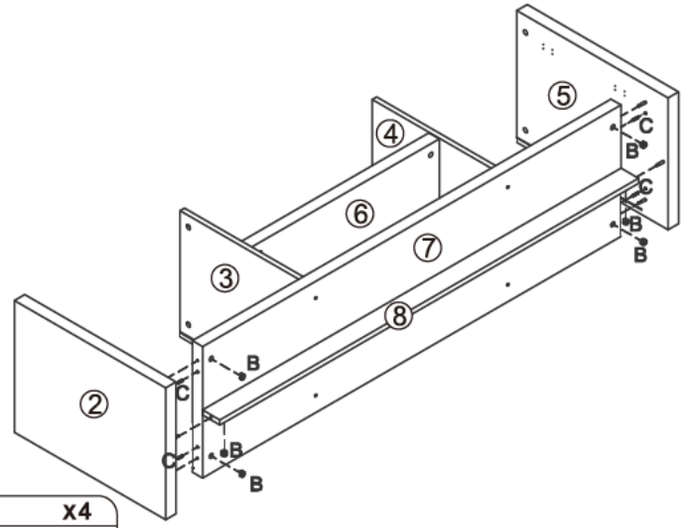

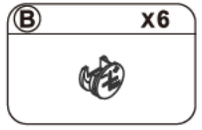

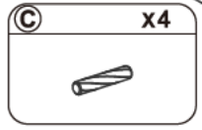

Step 8

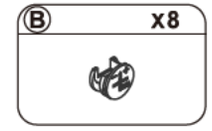

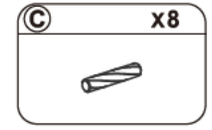

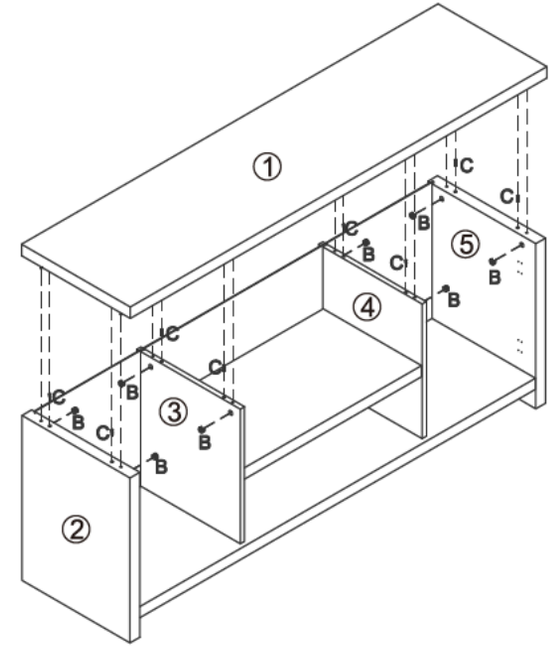

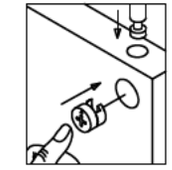

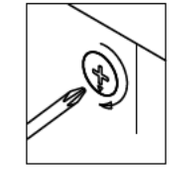

Step 9

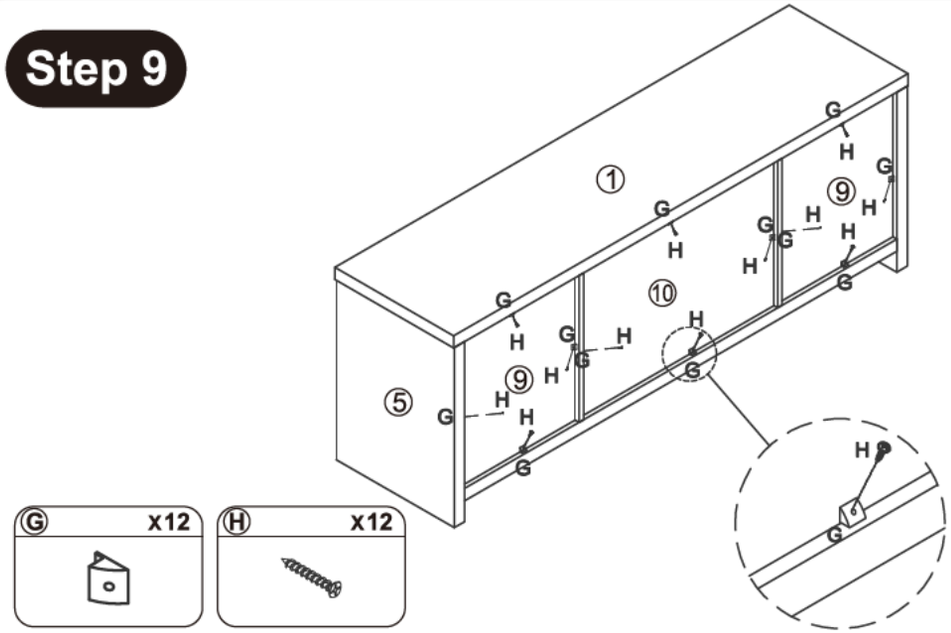

Step 11

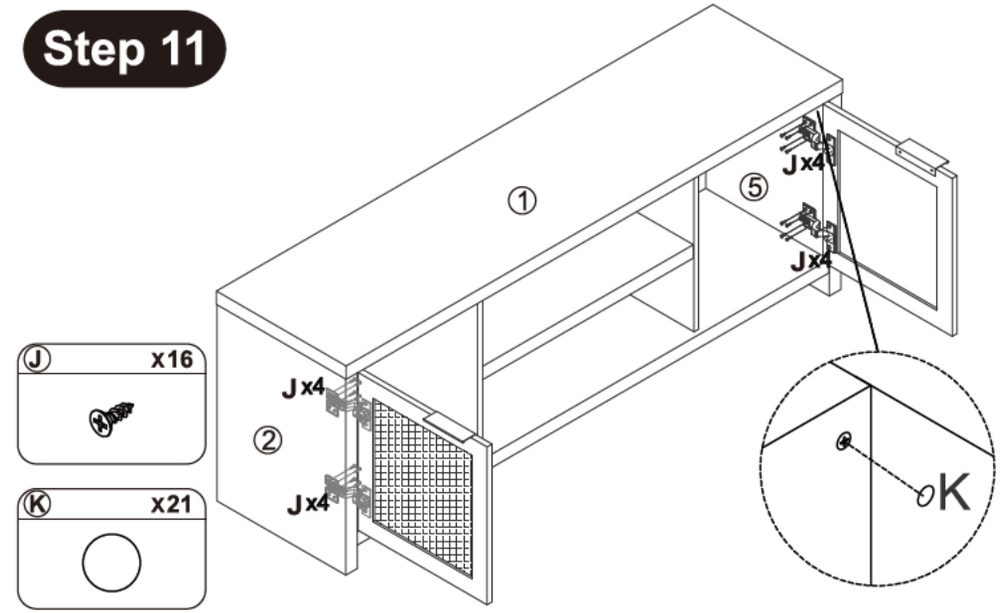

Step 10

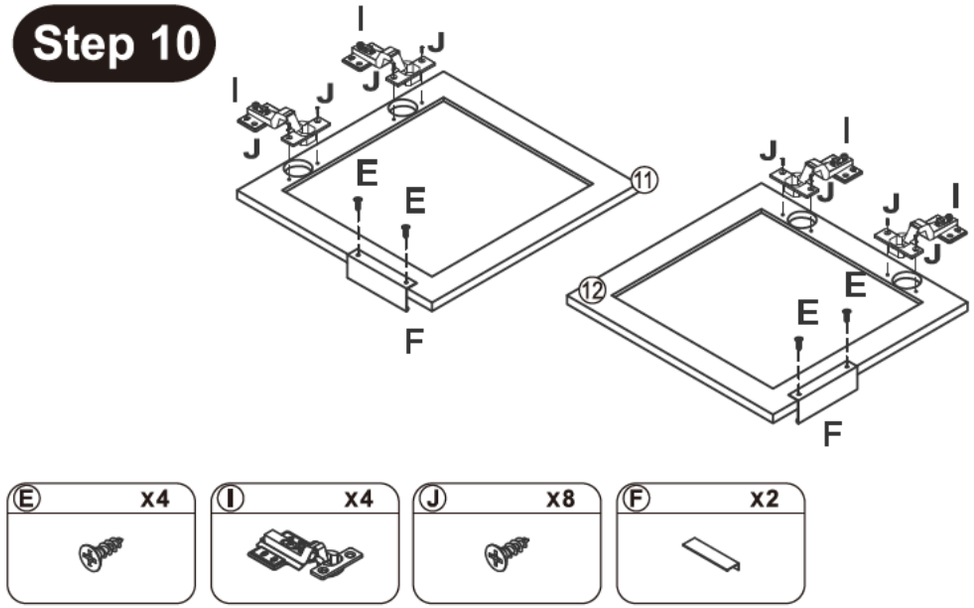

Step 12

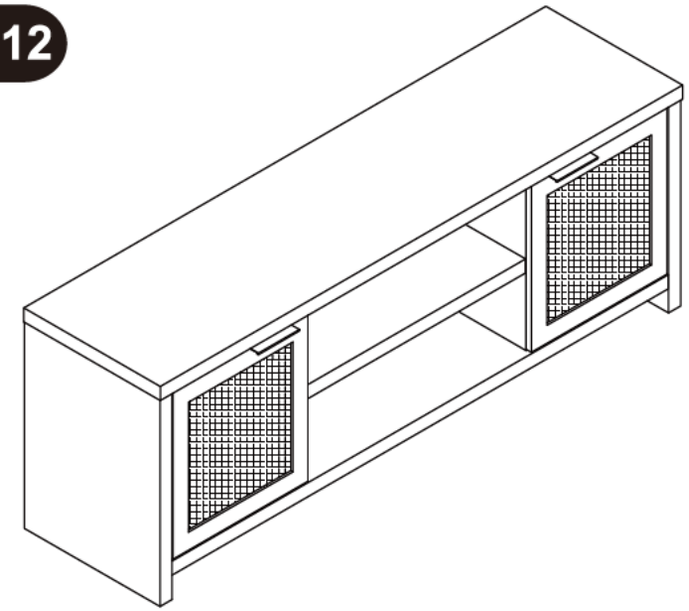

Adjusting the door

- Before adjusting the hinge, please check whether the cabinet is skewed.
- If the skew can not be repaired, please remove the anti-tipping device first, then adjust the cabinet to vertical position.
- Please adjust the hinge with the door open.
- Please operate it with more than 2 people, one person holds the door and the other one adjusts the screw.

Components Name

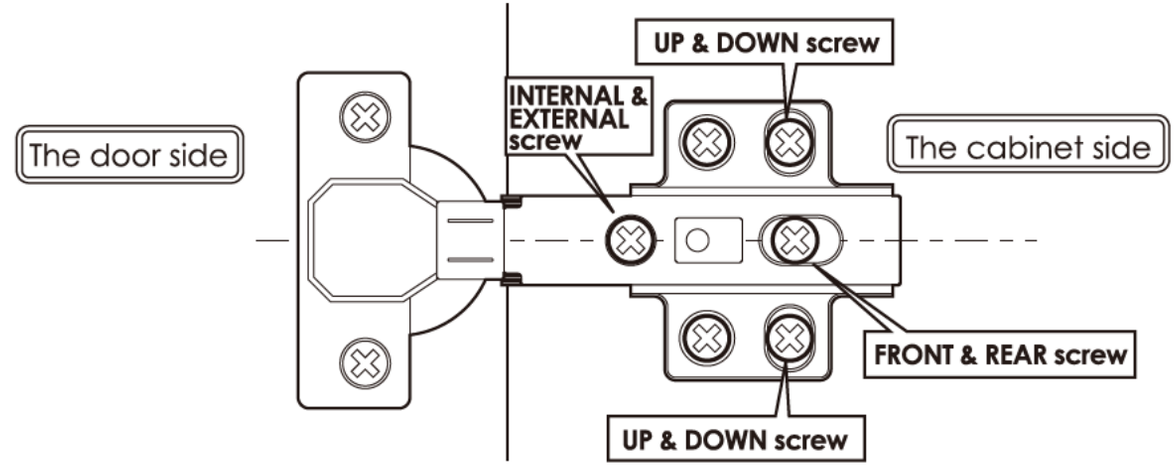

Obvious gaps between doors or Doors don't look closed

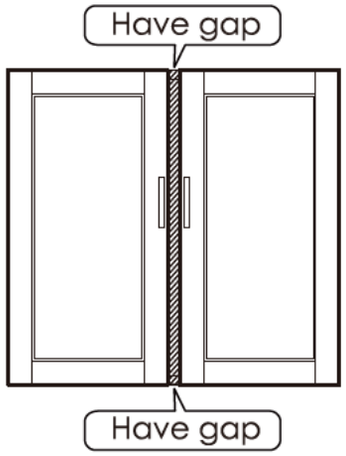

1 Turn "internal & external screw" to the right can make the door approach inside.
Please adjust the doors little by little.

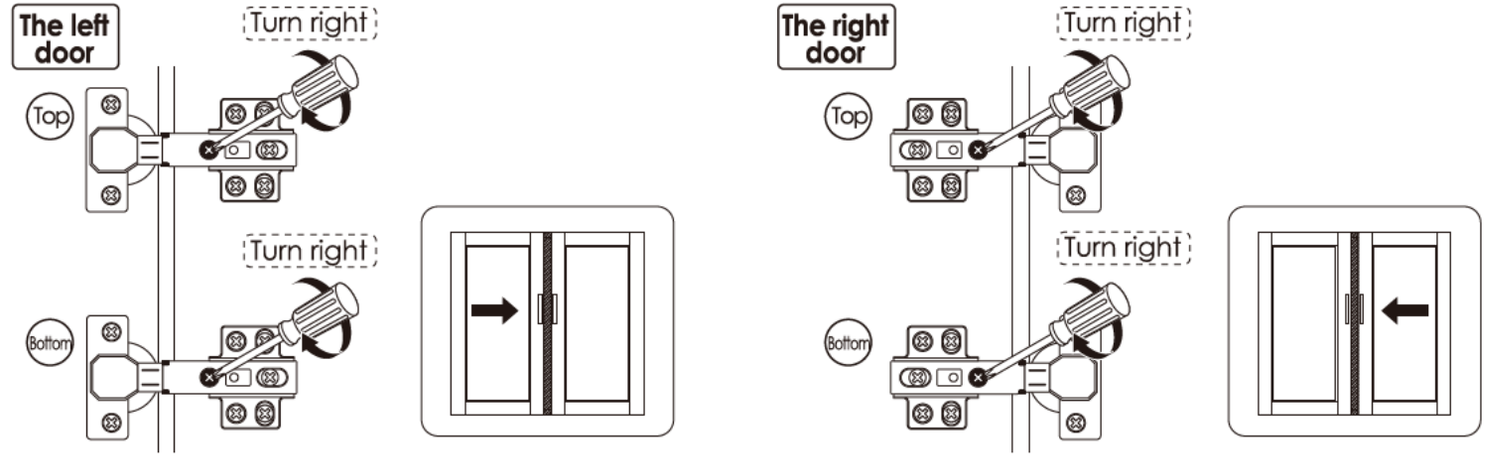

※ **If the 2 doors are overlap, please turn the "internal & external screw" to the left.**

When door is crooked

Please take the following steps to adjust first.

1 Rotate the "front and rear screws" to the left

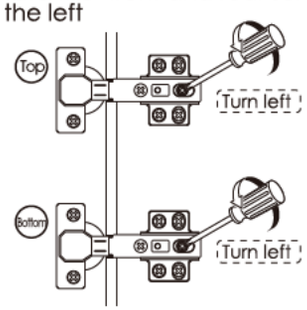

※ **After adjusting the "front and rear screw", the door still does not change, please turn the "internal & external screw" to the right Slightly.**

2 Push the door to the cabinet

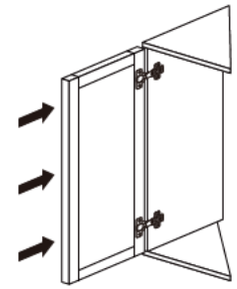

3 Rotate the "front and rear screws" to the right

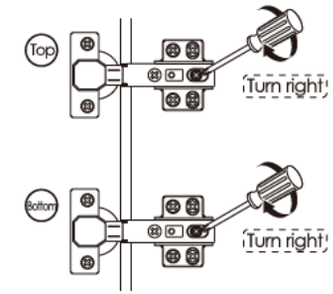

When door is leaning

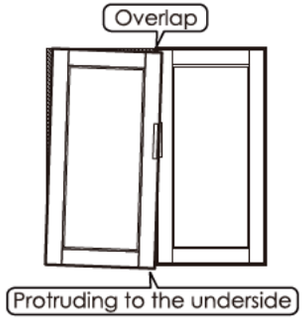

1 Turn "internal & external screw" to the left can make the top of the door tilted outward.

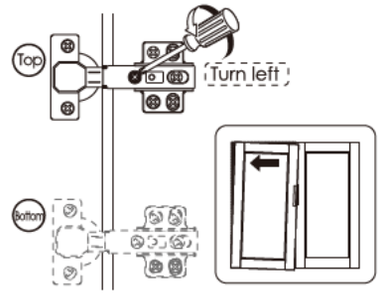

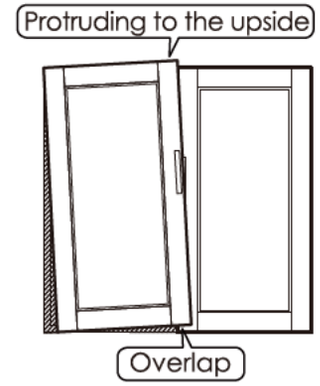

1 Turn "internal & external screw" to the left can make the bottom of the door tilted outward.

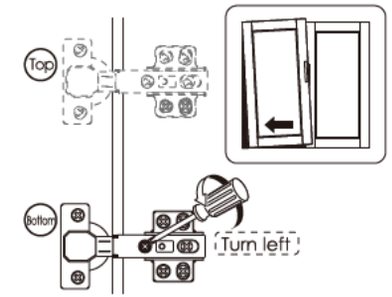

When the door is higher on top

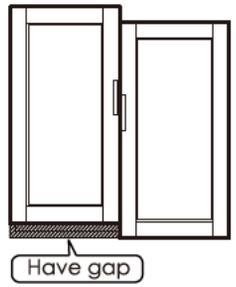

1 Turn "up & down screw" to the left

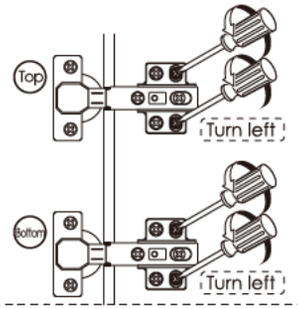

2 Lower the door's height so that 2 doors are of the same height.

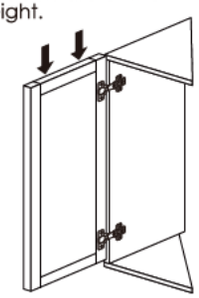

3 Turn "up & down screw" to the right

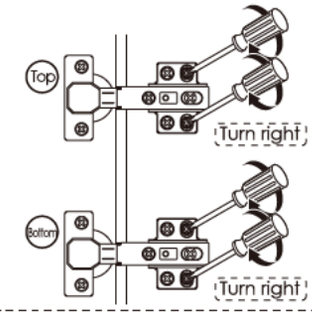

※ If the door is lower on bottom, please lift up the left door slightly on step 2

※ **Stay Scratch-Free: Safeguard Your Furniture by Assembling on Carpet.**

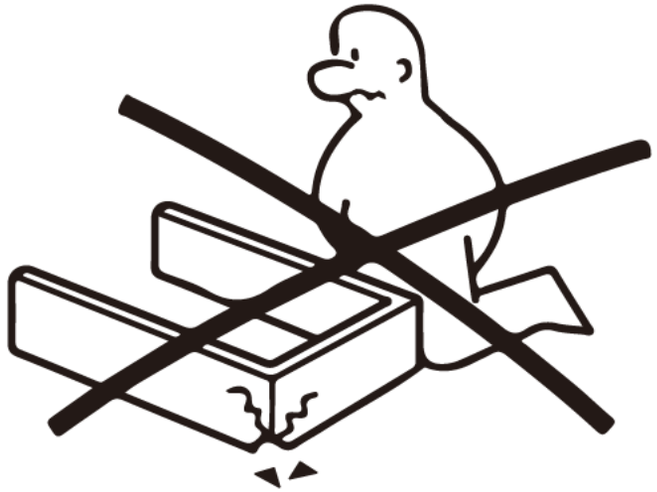

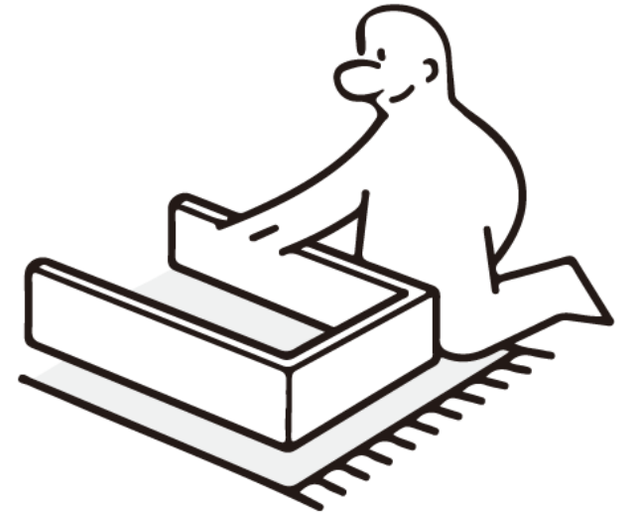
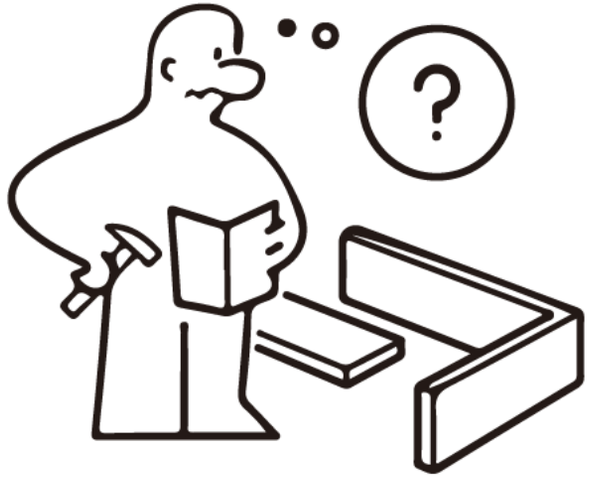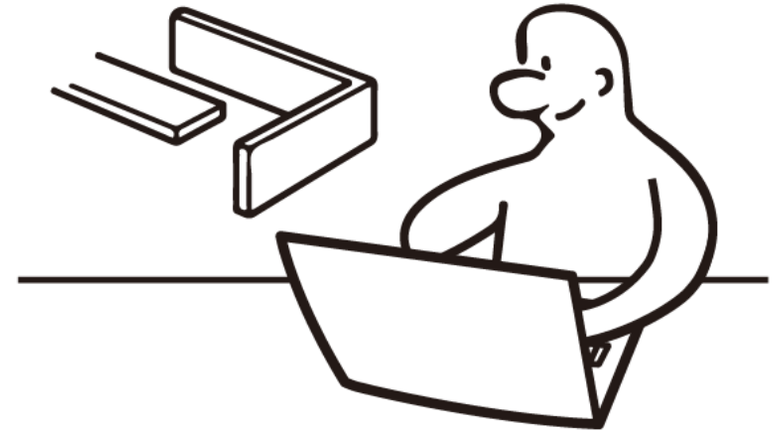
※ **Stuck in Assembly Limbo? Check out our website or contactour support team for quick solutions!**