Installation & Assembly

Cat House

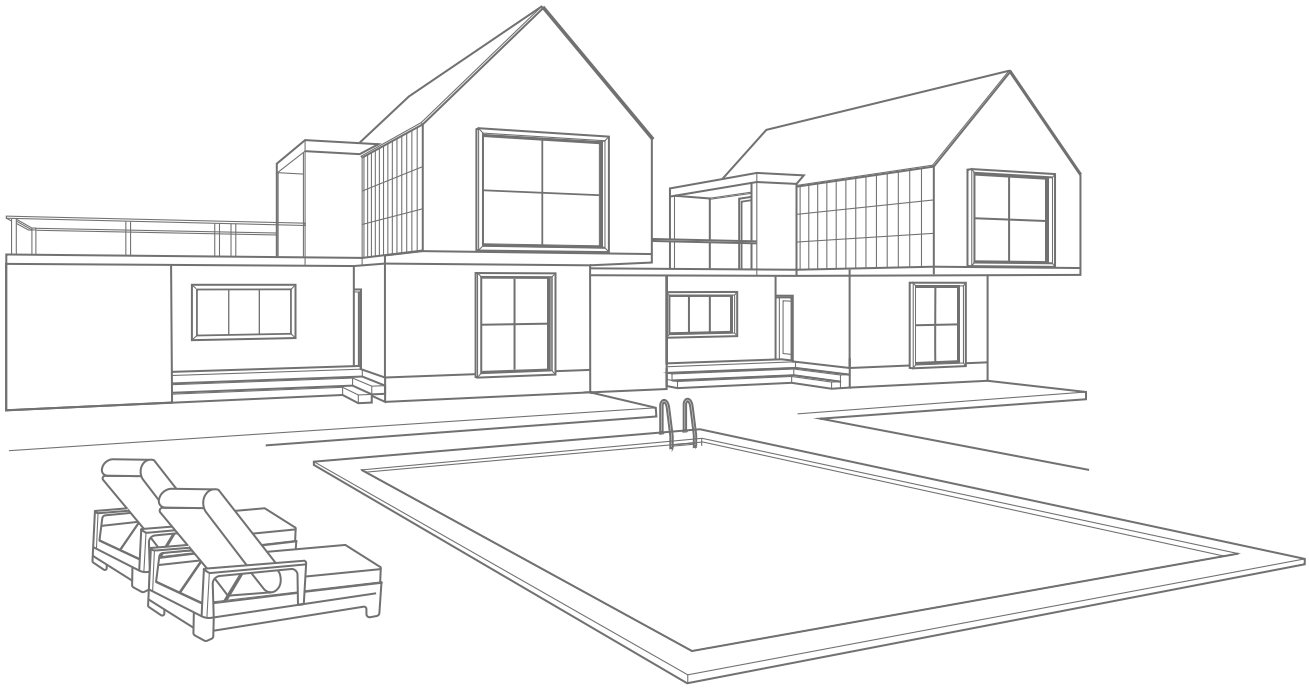

ASSEMBLY INSTRUCTION

SCREWS

A

3.5x50 (48+2pcs)

B

3.5x40 (48+2pcs)

C

3.0x23 (52+2pcs)

D

3.0x16 (8+1pcs)

E

M6x60 (24pcs)

F
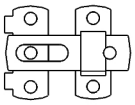
(2pcs)

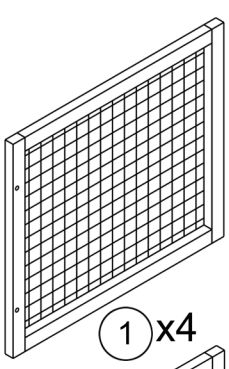
1 x4

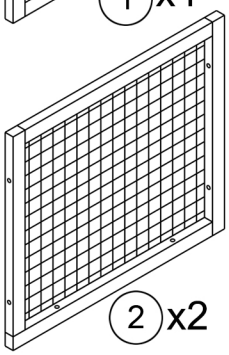
2 x2

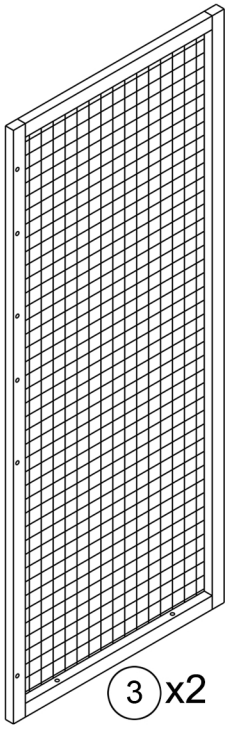
3 x2

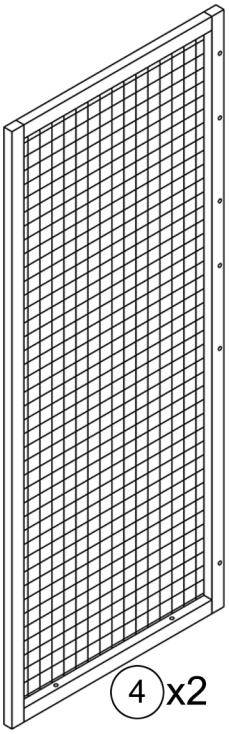
4 x2

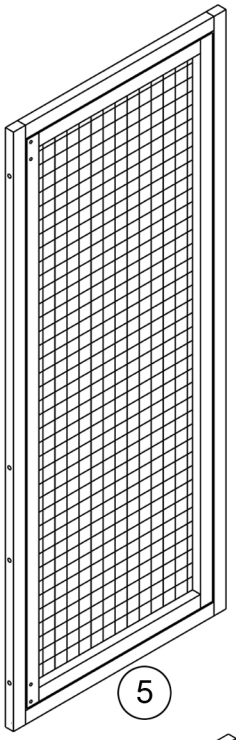
5

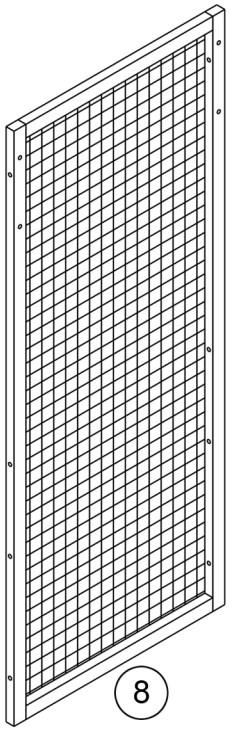
8

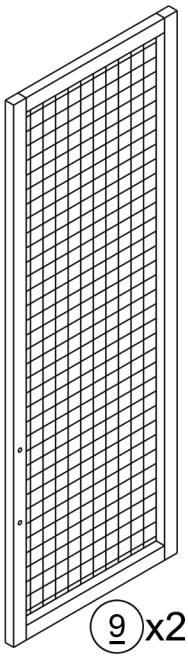
9 x2

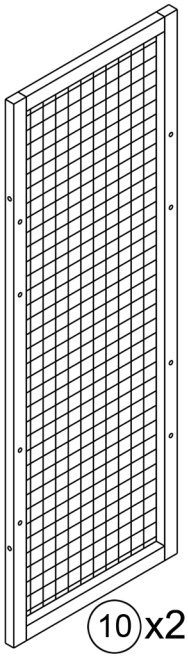
10 x2

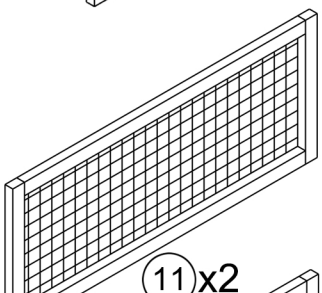
11 x2

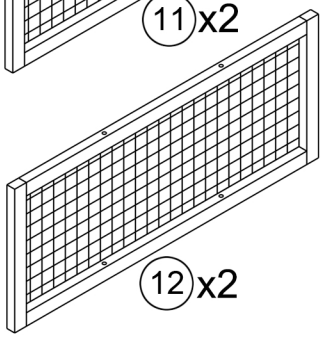
12 x2

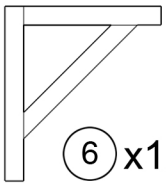
6 x12

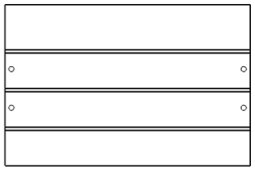
7 x2


20

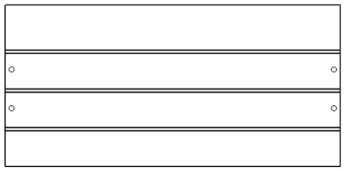
13

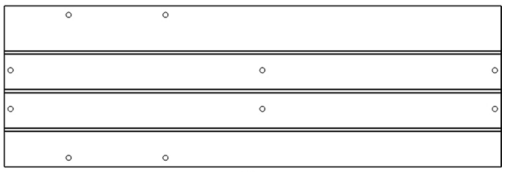
14 x2

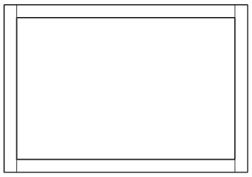
15 x4

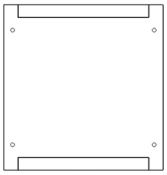
16 x2

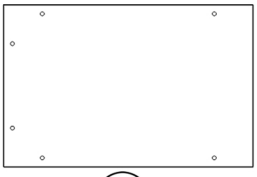
17 x2

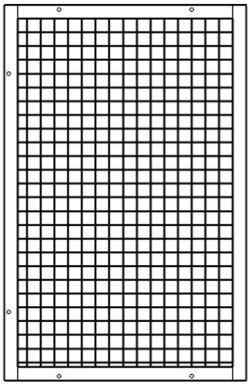
18 x2

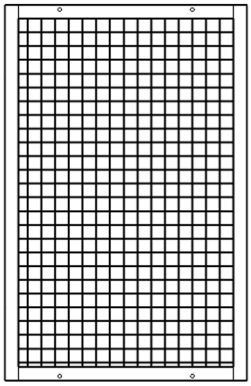
19

1

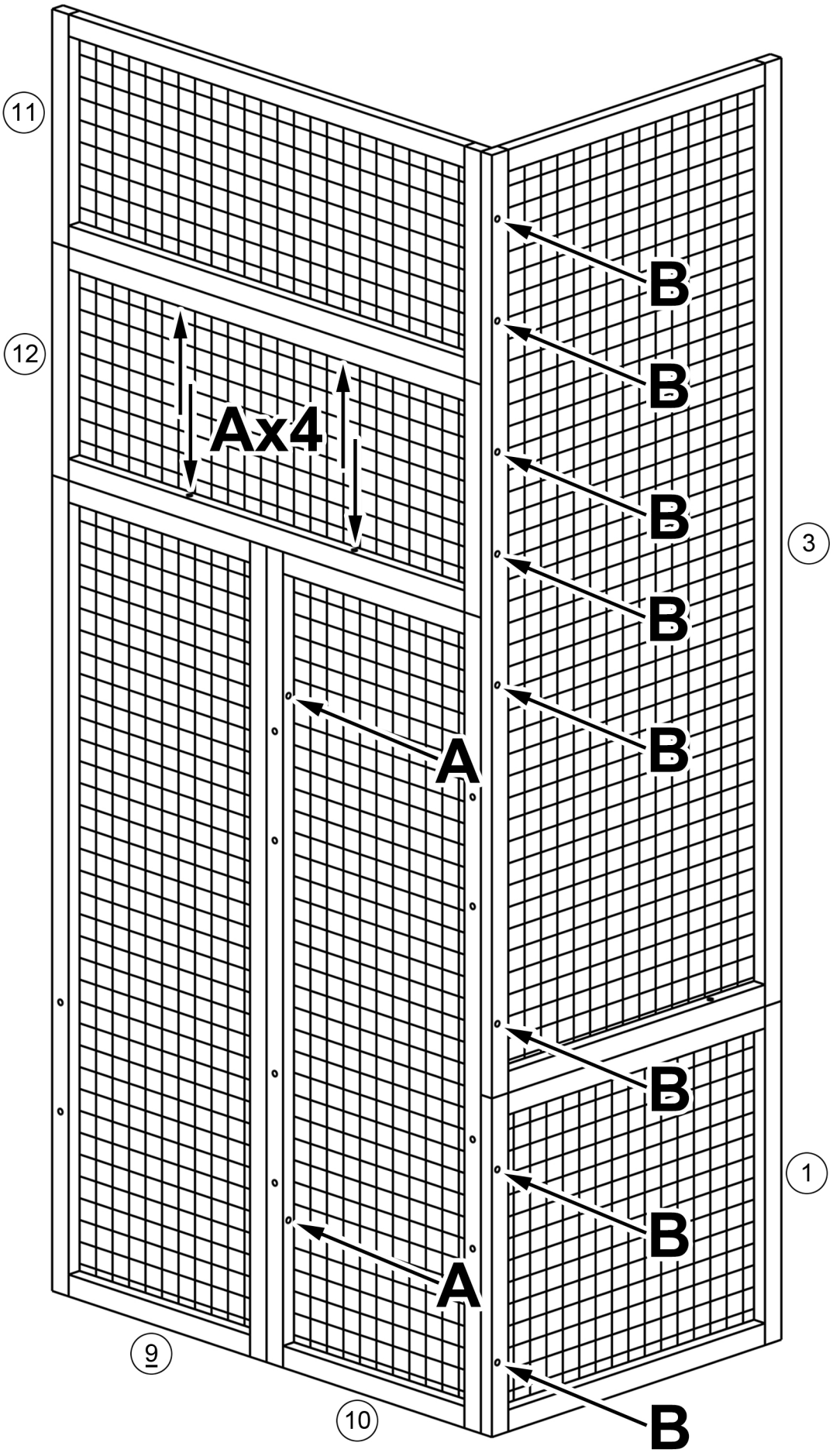

2

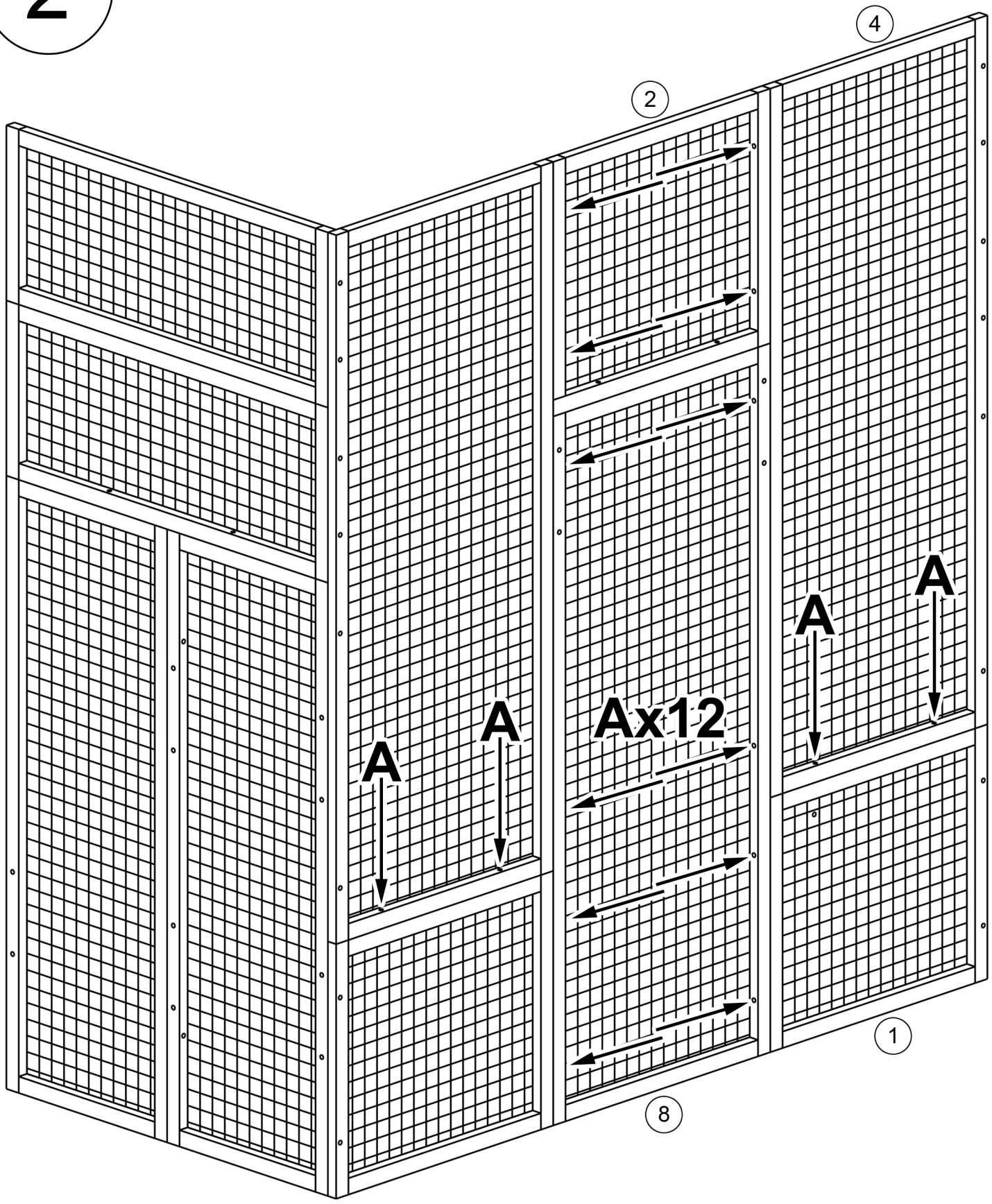

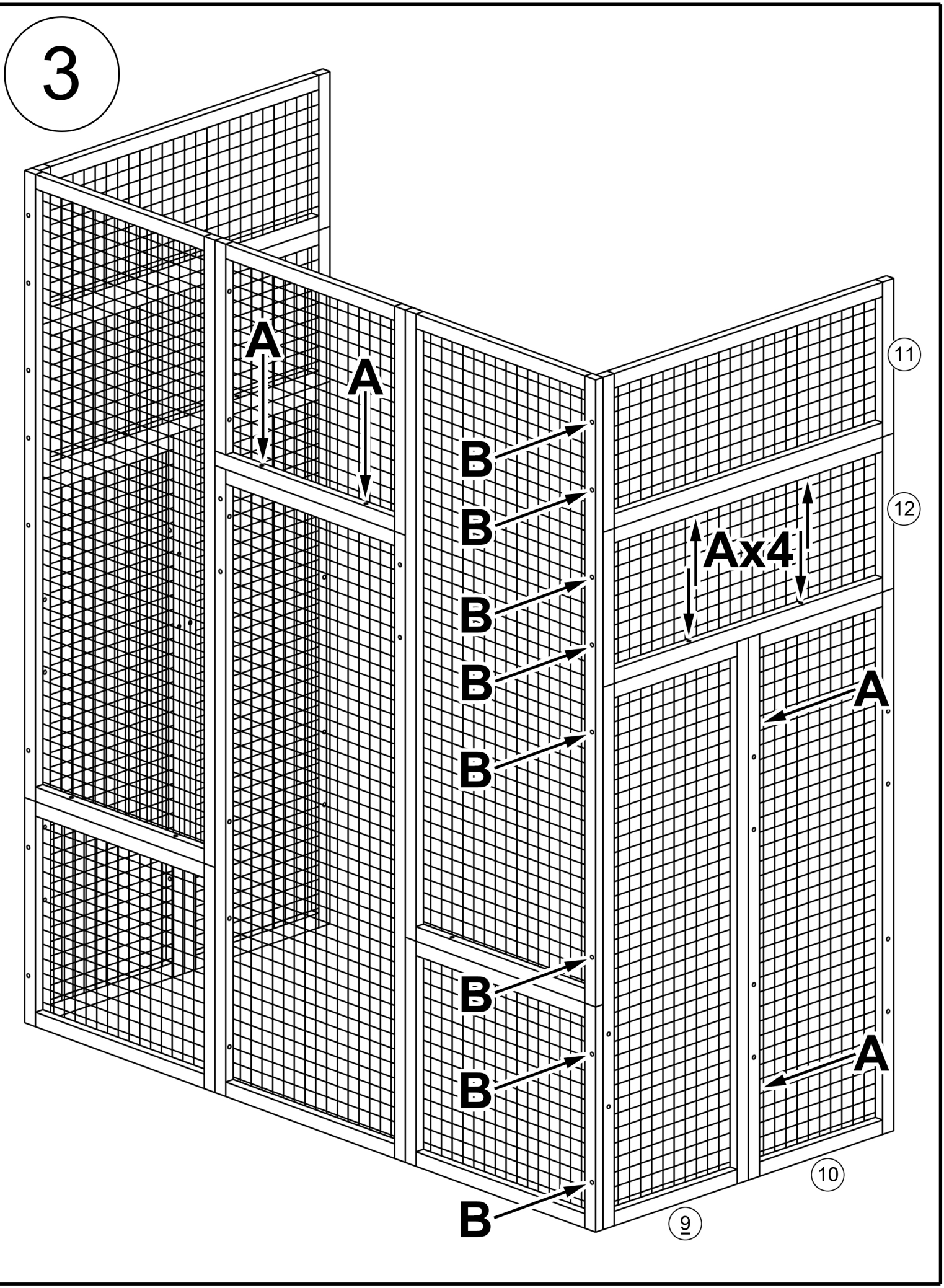
3
A
A
B
B
B
B
B
B
B
B
Ax4
A
A
11
12
10
9

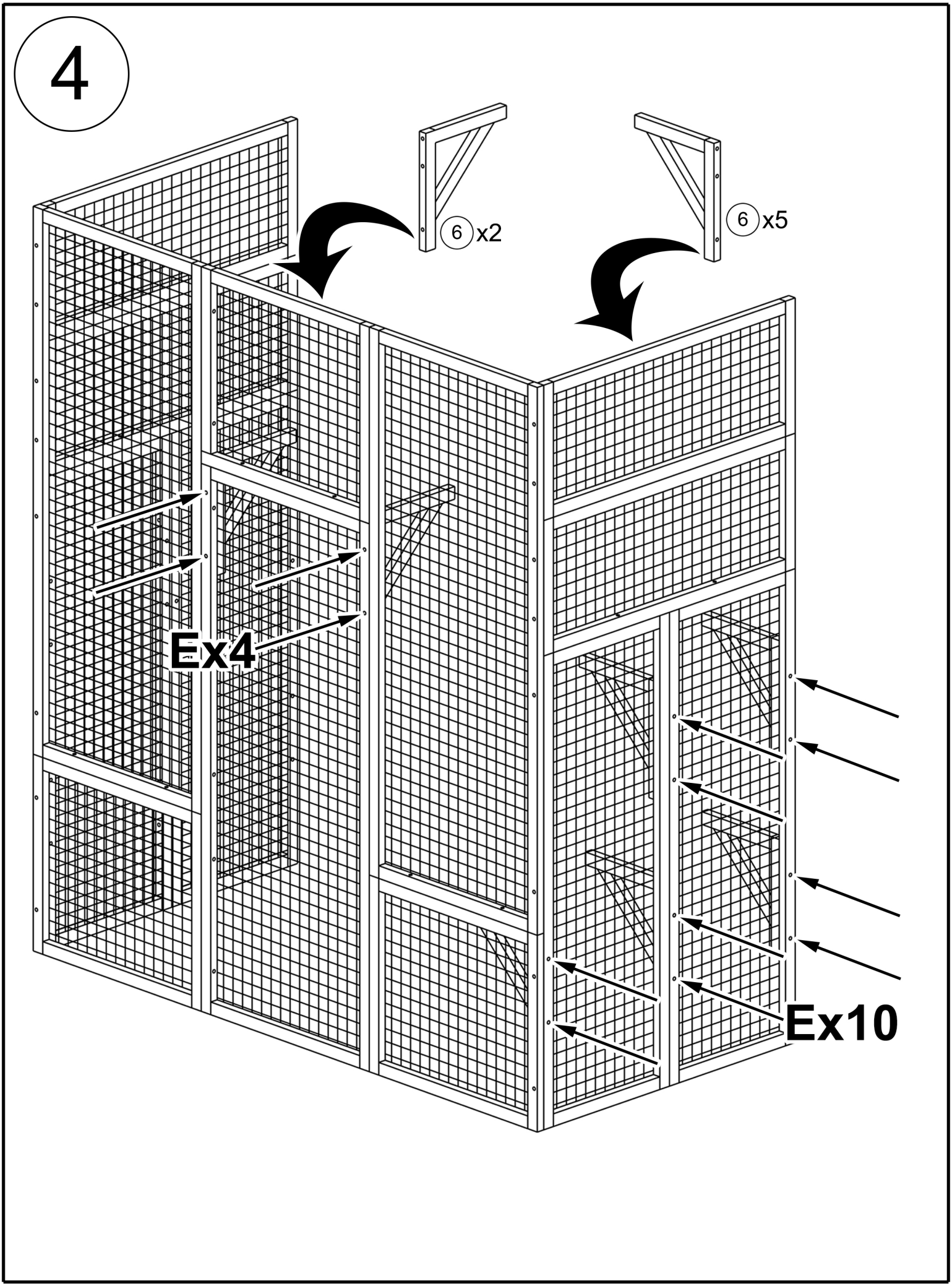
4
6 x2
6 x5
Ex4
Ex10

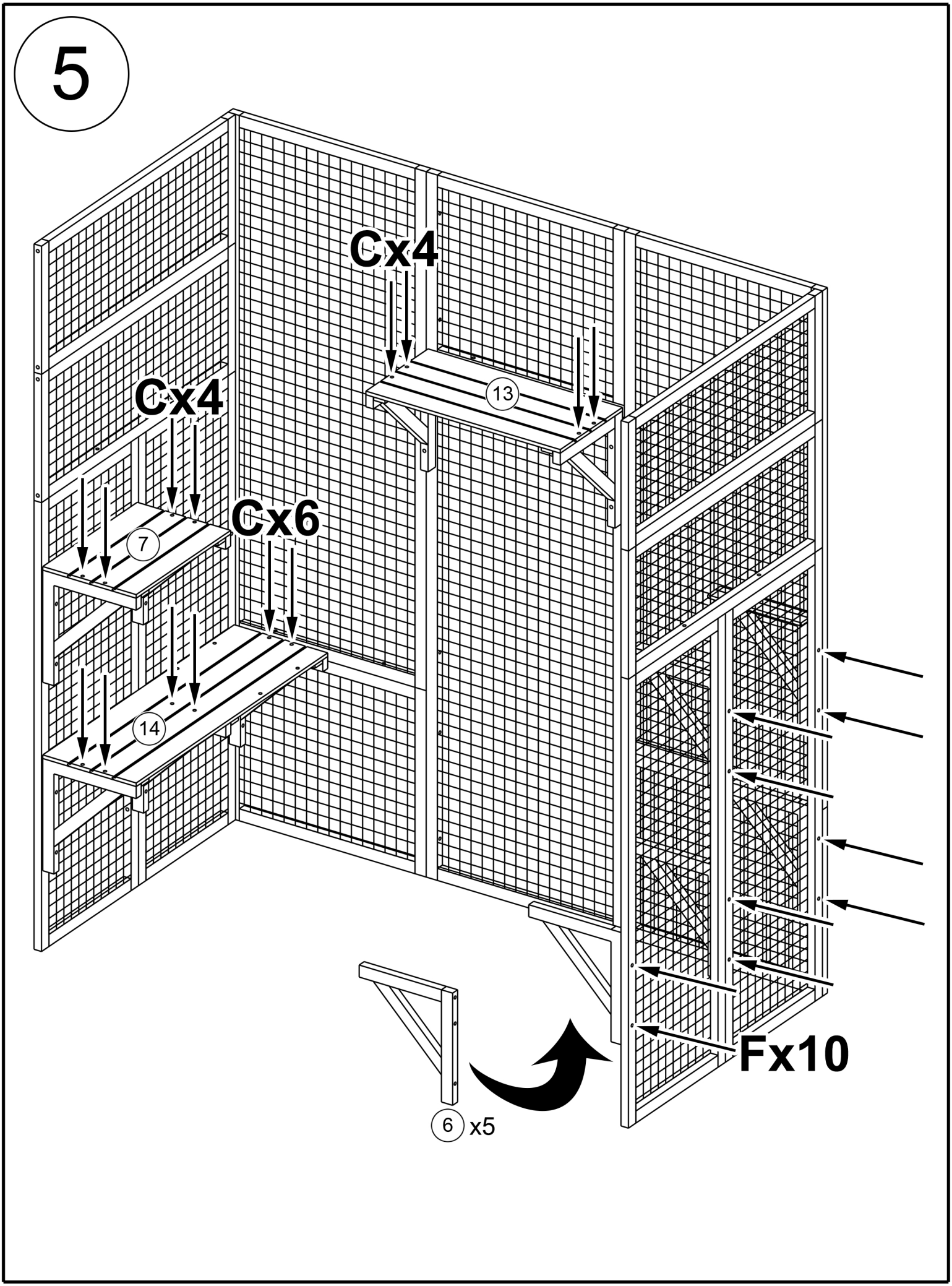
5
Cx4
Cx4
13
Cx6
7
14
Fx10
6 x5

6

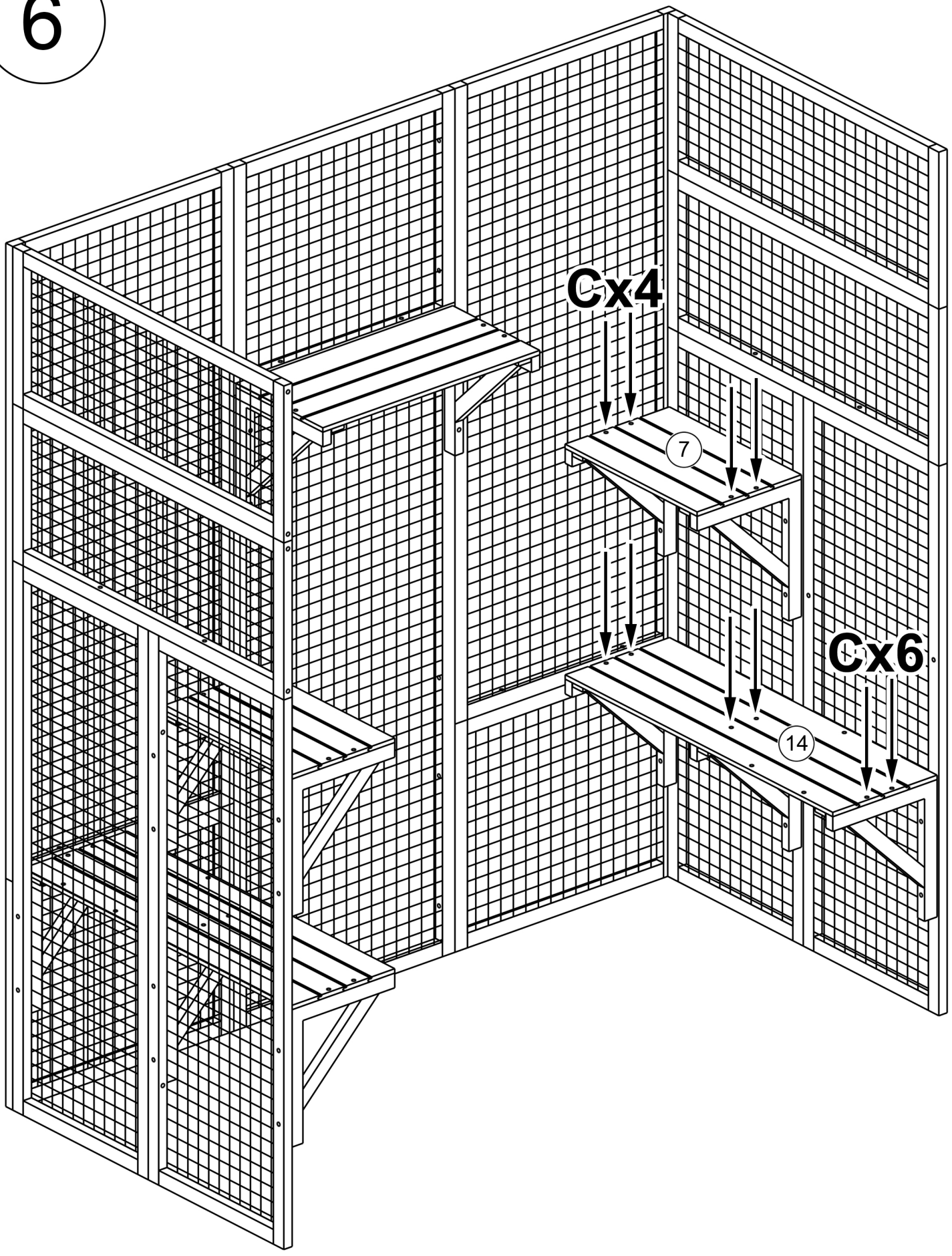

7 x2

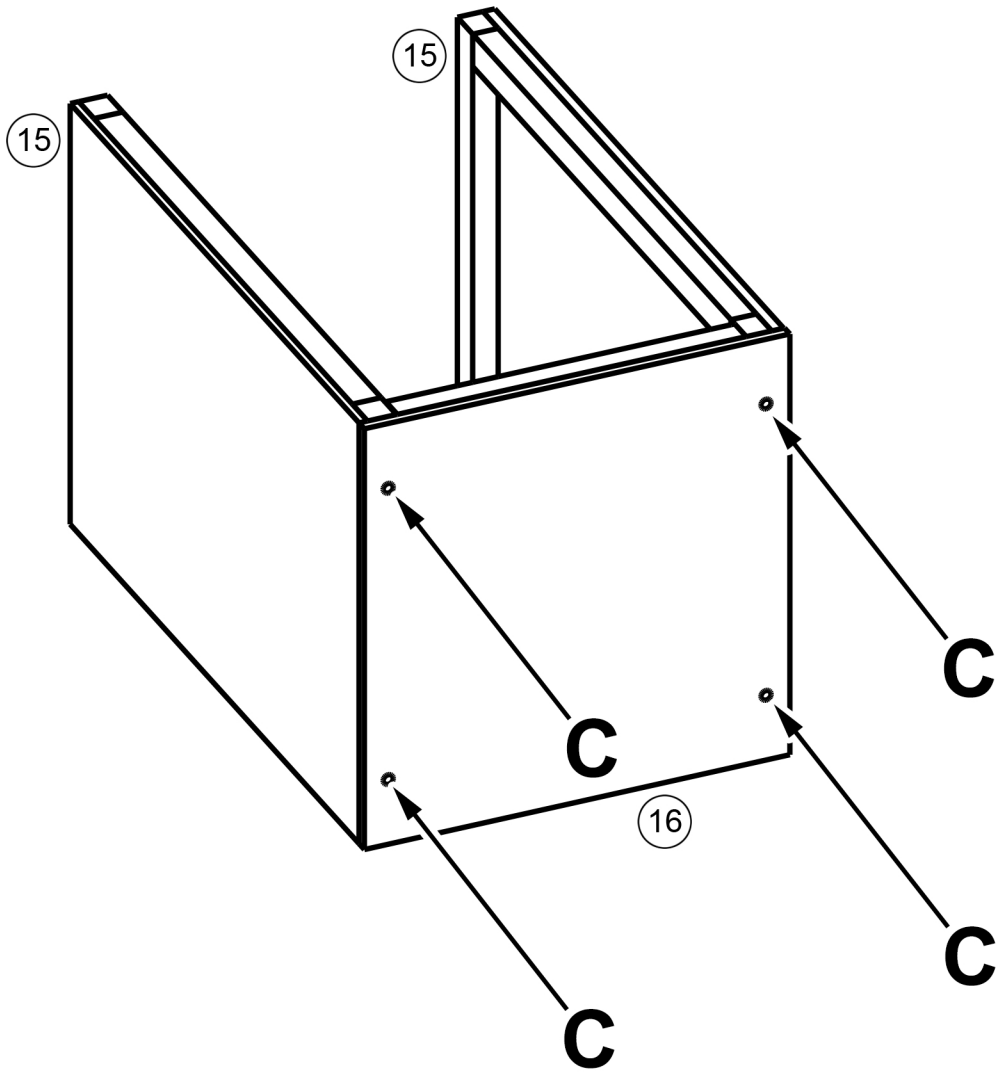

8 x2

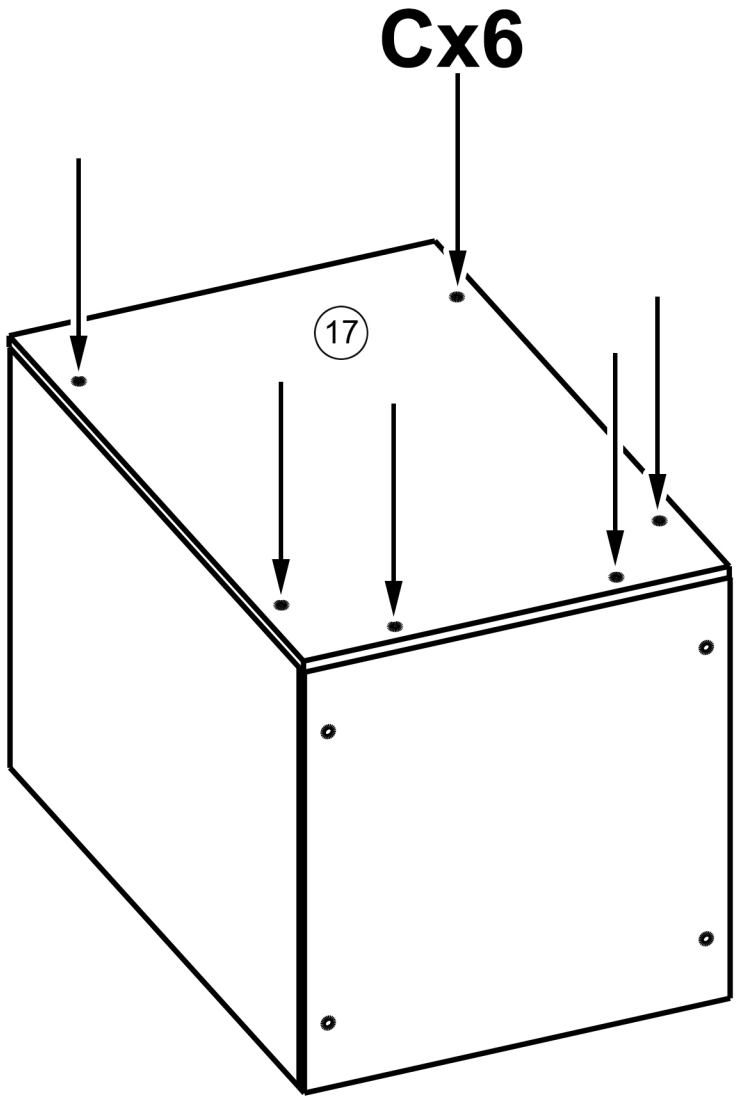

9

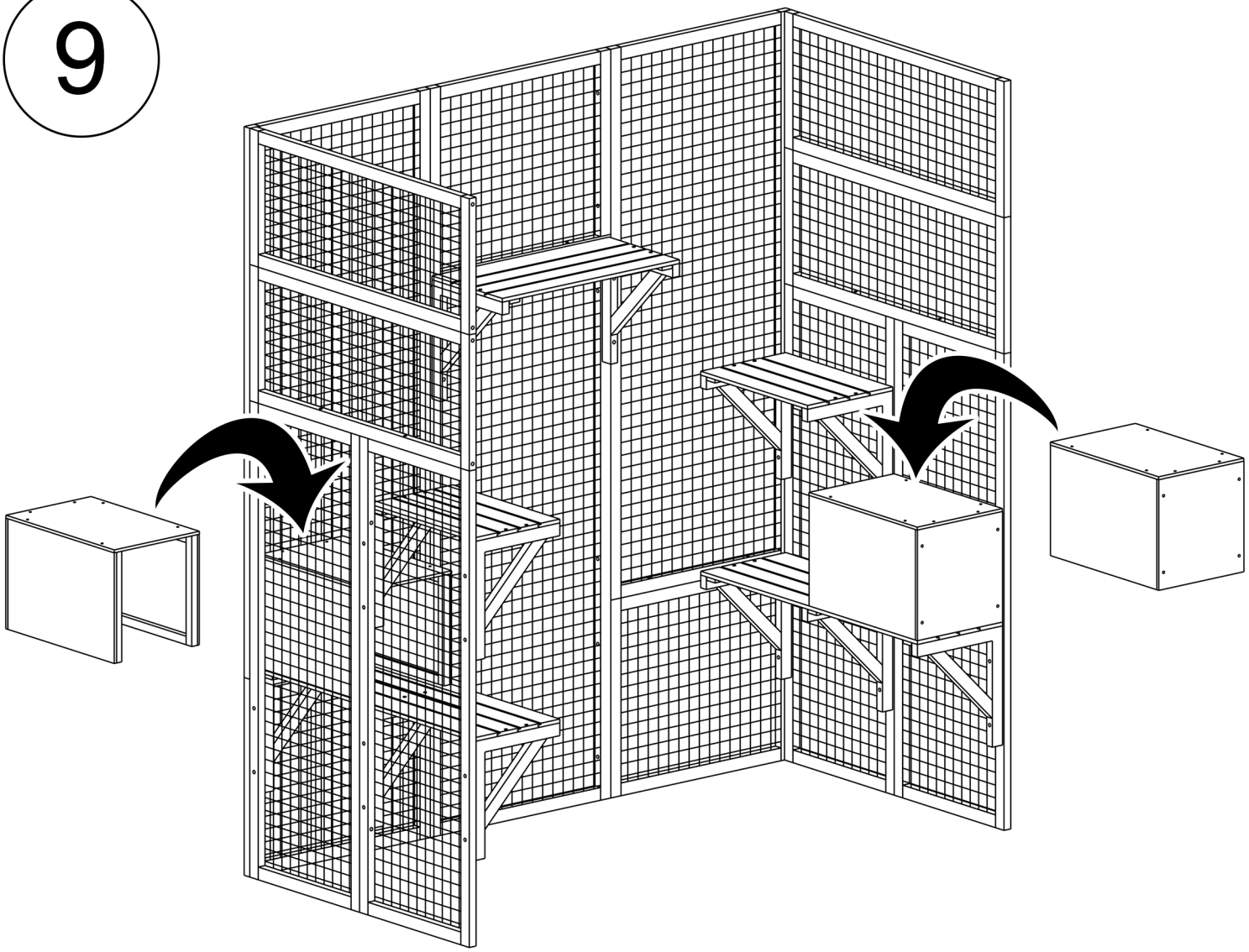

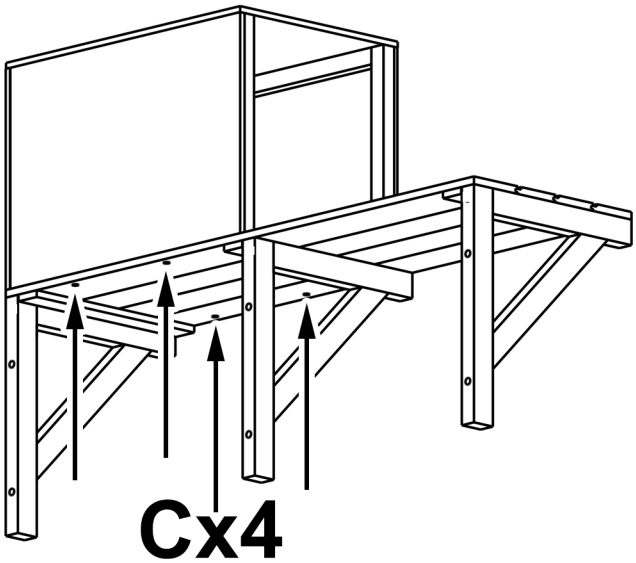

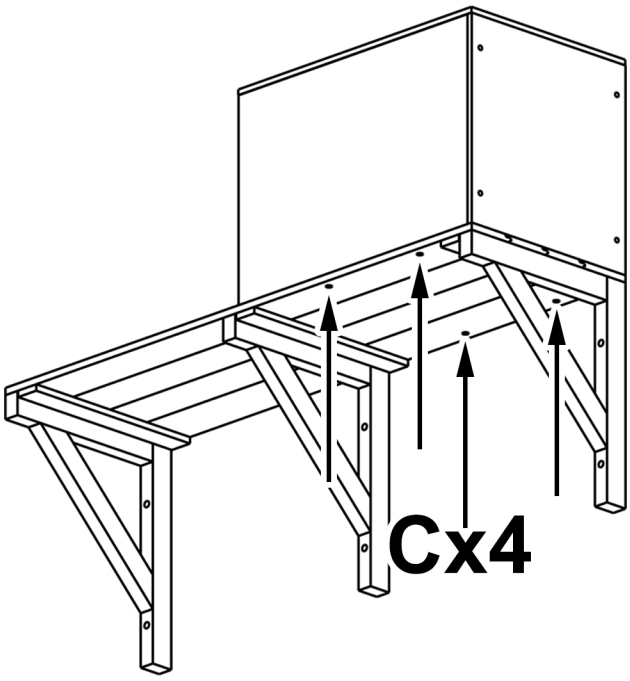

10

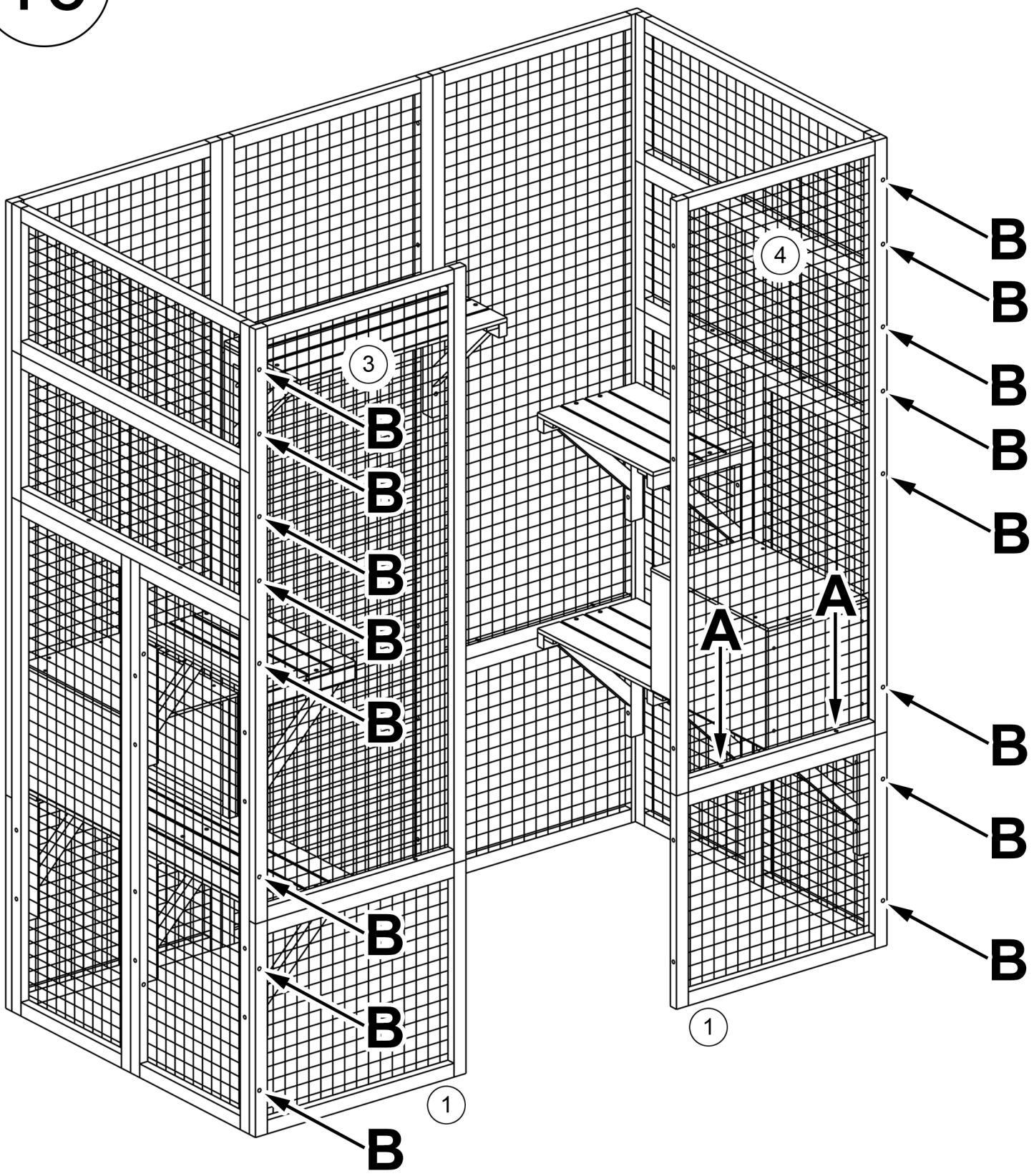

11

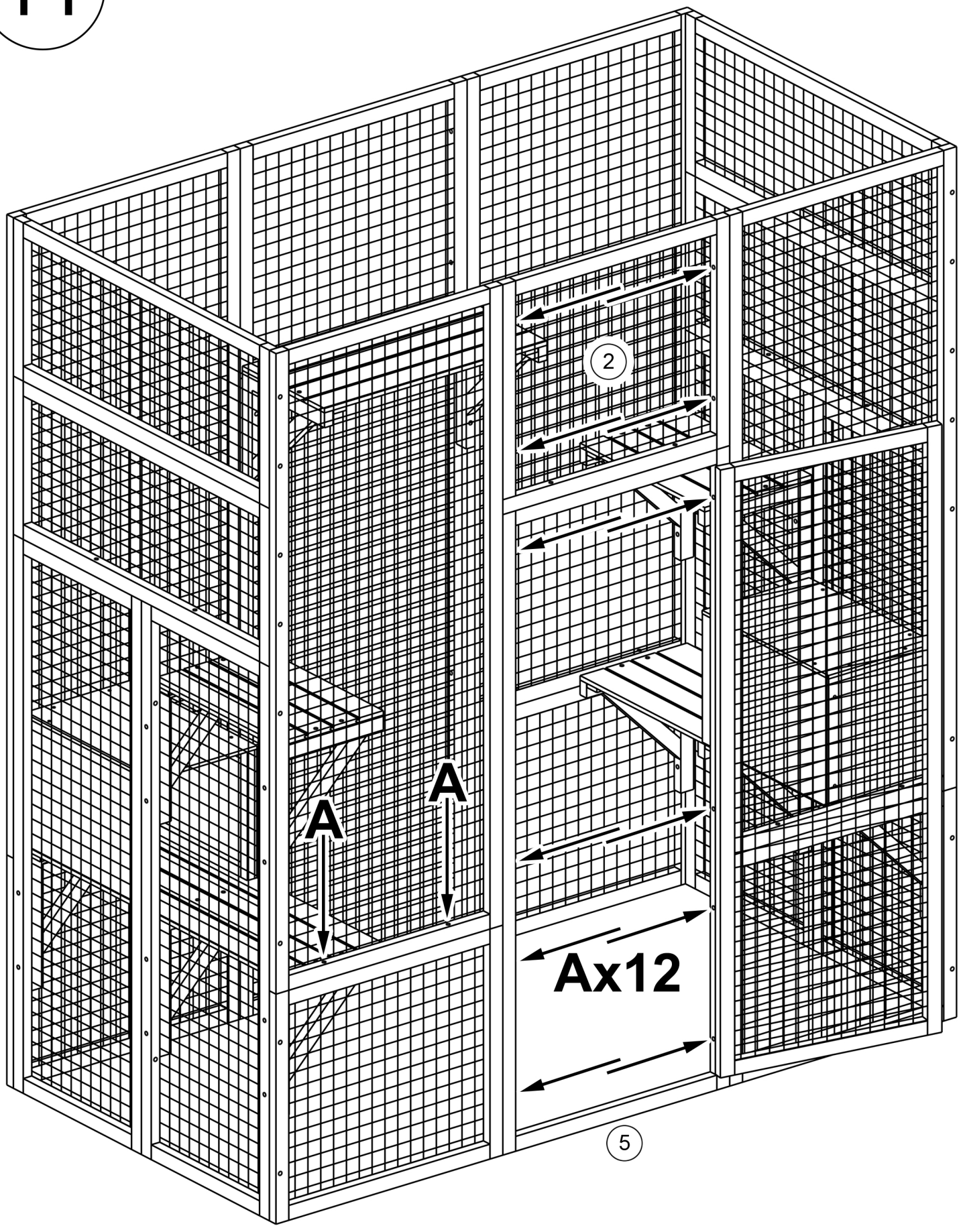

12

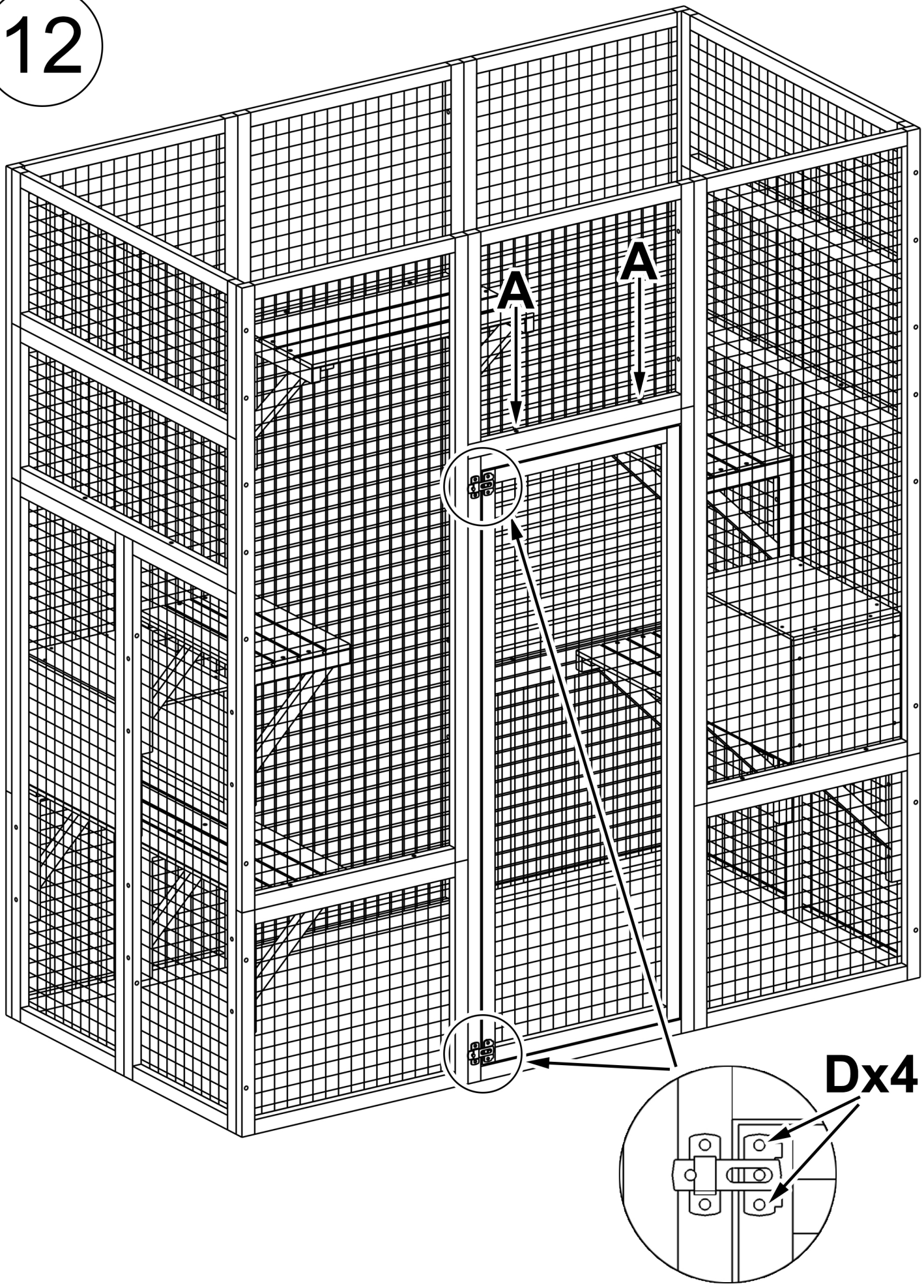

13

Bx16

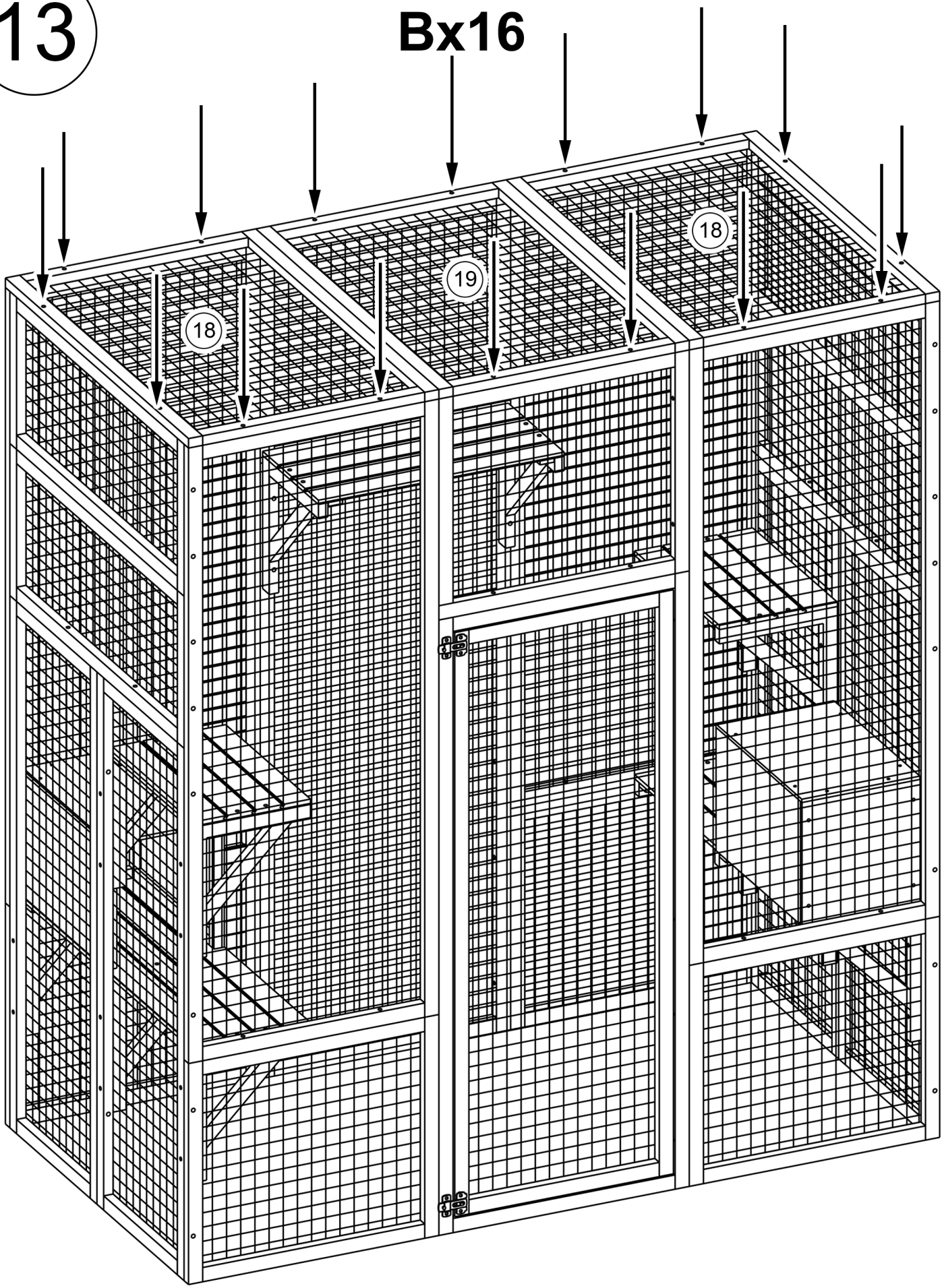

14



20

20