HUAYING

HY008

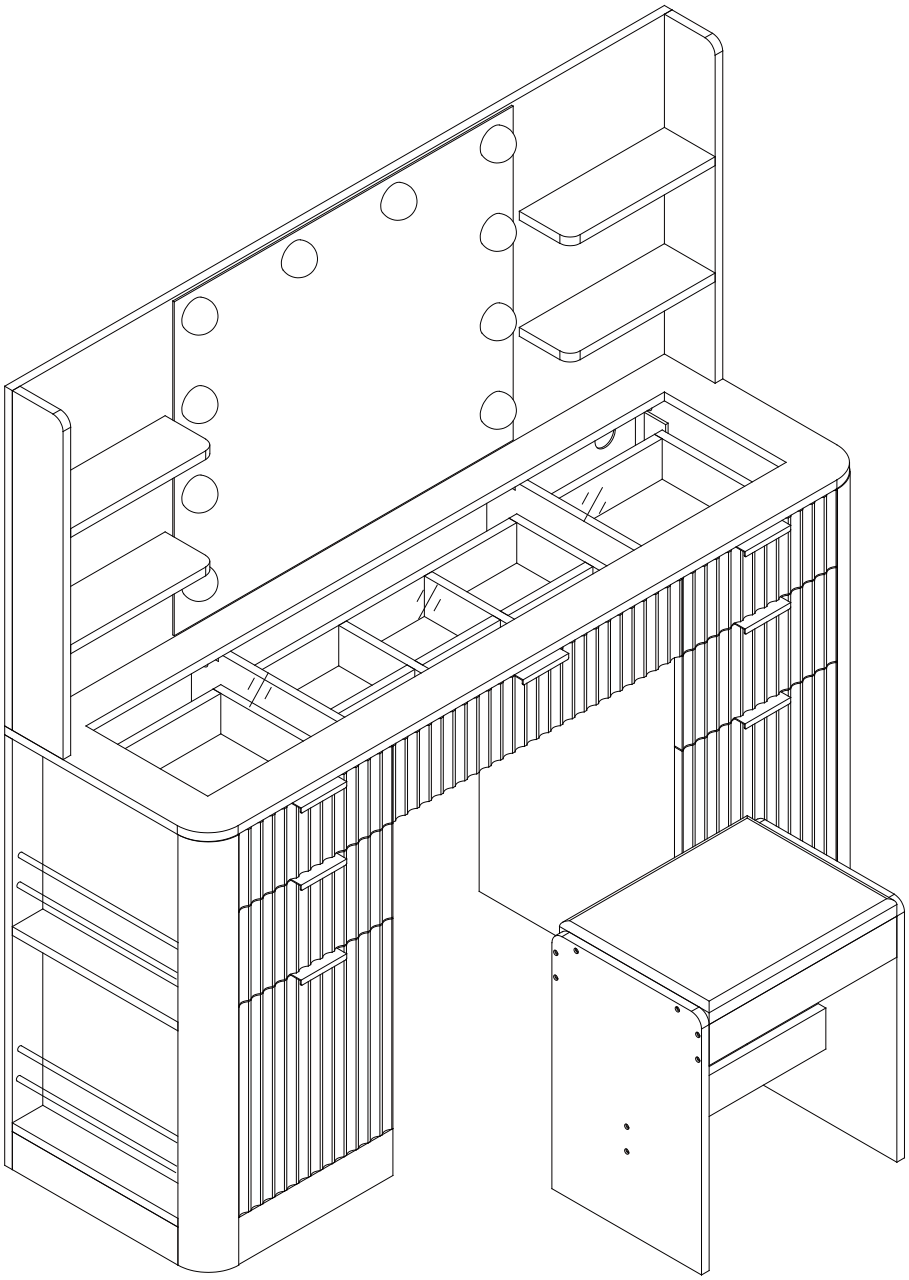

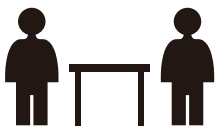

Suggestion: To make the installation process easier and faster, we recommend that two people work together to install the Dresser

Helpful Hints

1.We recommend two people to assemble the product easier and faster.

2. Please DO NOT tighten the screws deeply during assembling avoiding that metal frame can be bent and plank will crack.

3.We recommend that all screws should not be tightened over during assembling to make it easy to adjust.When it is adjusted to proper stationall screws should be tightened.

4.Caution: If using a power drill or power screwdriver for screwing, please be aware of to slow down and stop when screw is tight. Failure to do so may result in stripping the screw.

Customer Service

As this item contains many parts, please read the installation instruction carefully before installation and complete the installation with the cooperation of your partner. Please use tools properly and carefully. If you have any questions about the product and installation, please contact us freely.  **hy20241127@163.com**

EXPLODED

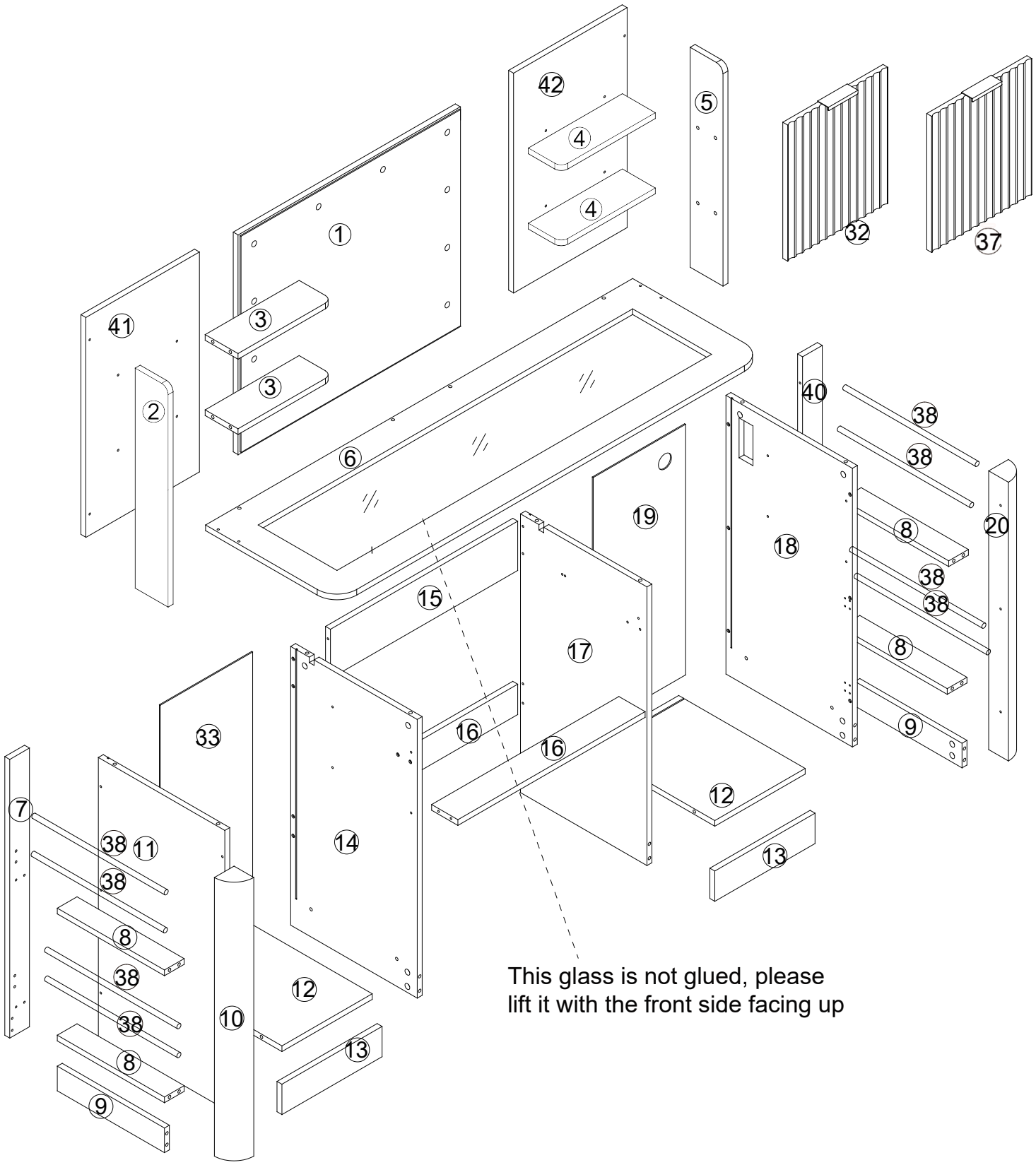
42
4
4
5
32
37
1
41
3
3
2
6
40
38
38
19
20
18
8
38
38
15
17
8
9
33
16
16
12
7
38
11
14
13
38
8
38
12
10
38
13
8
9
This glass is not glued, please
lift it with the front side facing up

EXPLODED

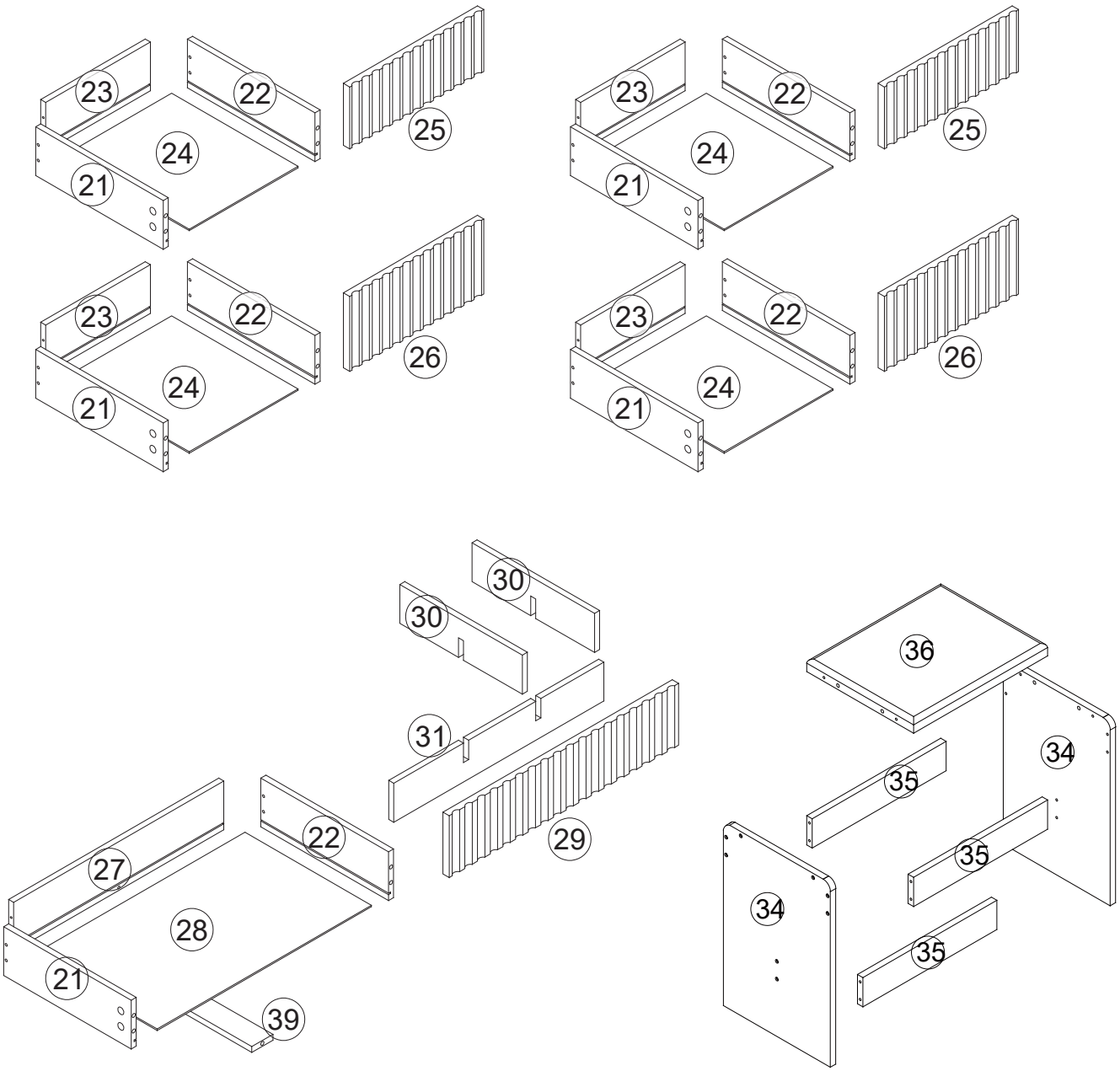
23
22
25
24
21
23
22
25
24
21
23
22
26
24
21
23
22
26
24
21
30
30
31
29
22
27
28
21
39
36
34
35
35
34
35

Accessories list

① x1 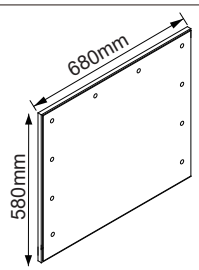	② x1 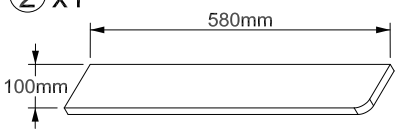	③ x2 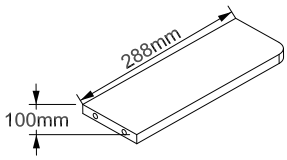
④ x2 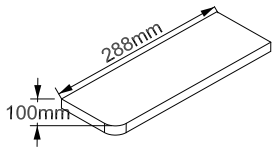	⑤ x1 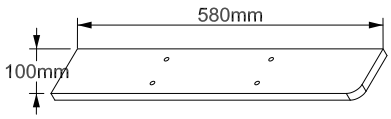	⑥ x1 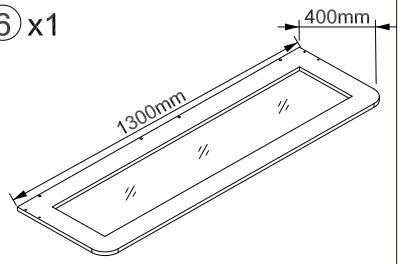
⑦ x1 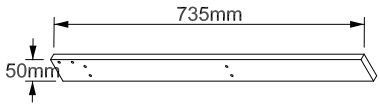	⑧ x4 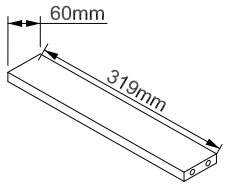	⑨ x2 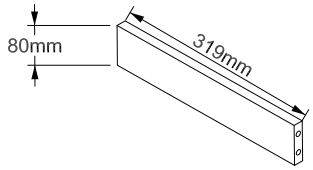
⑩ x1 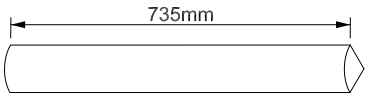	⑪ x1 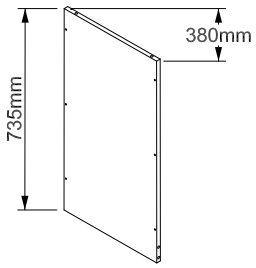	⑫ x2 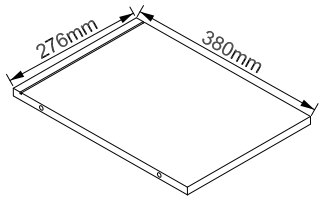
⑬ x2 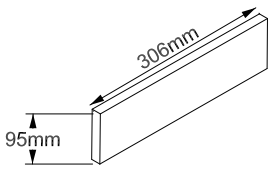	⑭ x1 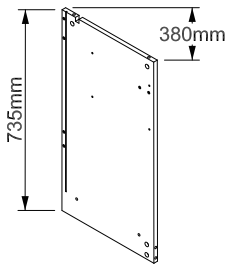	⑮ x1 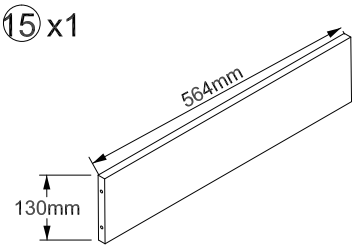
⑯ x2 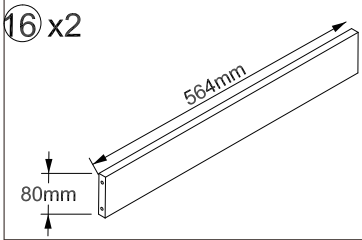	⑰ x1 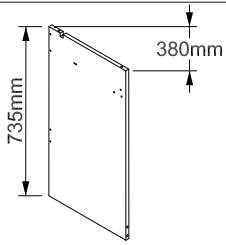	⑱ x1 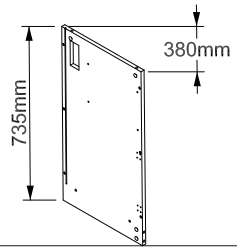

★ In many cases, we include additional hardware. So after following the assembly instructions, don't worry if there are still extra pieces left over-they're included as a "just in case" for your convenience.

Accessories list

19 x1 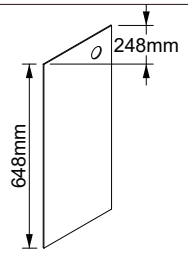	20 x1 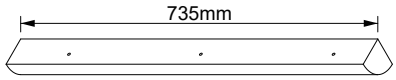	21 x5 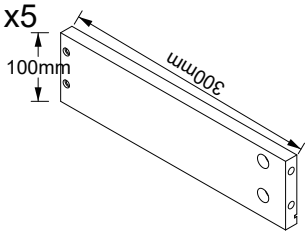
22 x5 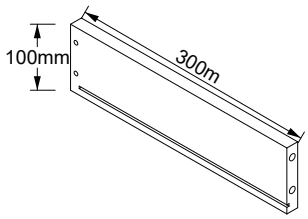	23 x4 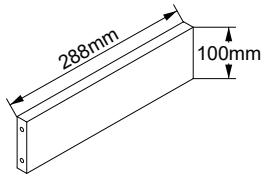	24 x4 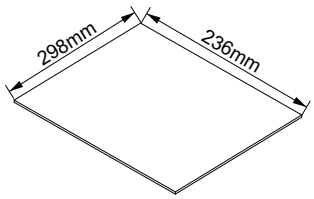
25 x2 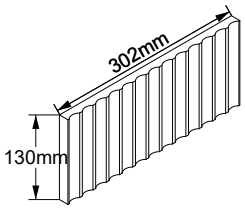	26 x2 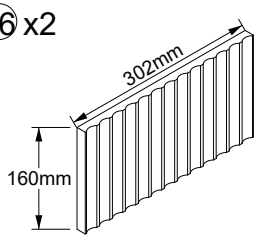	27 x1 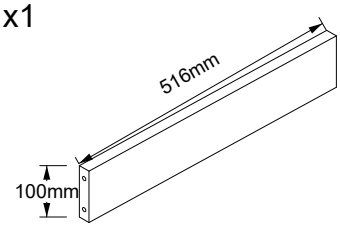
28 x1 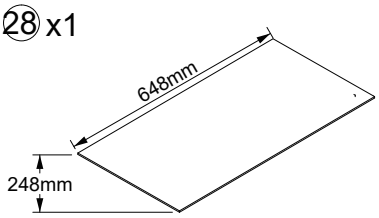	29 x1 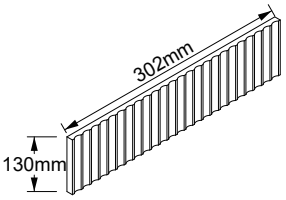	30 x2 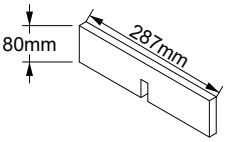
31 x1 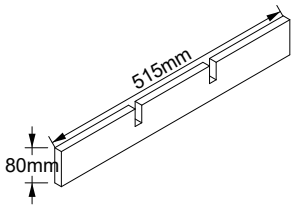	32 x1 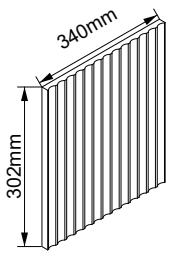	33 x1 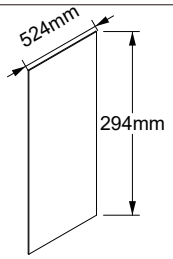
34 x2 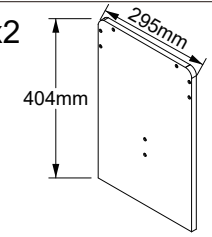	35 x3 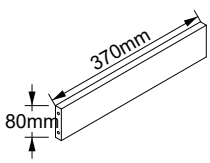	36 x1 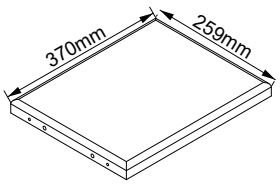

★ In many cases, we include additional hardware. So after following the assembly instructions, don't worry if there are still extra pieces left over-they're included as a "just in case" for your convenience.

Accessories list

37 x1 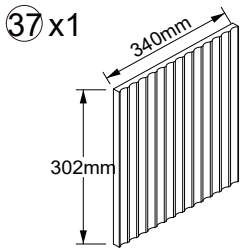	38 x8 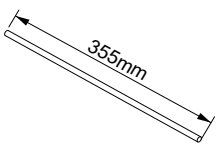	39 x1 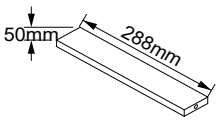	40 x1 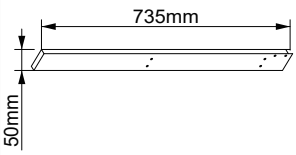
41 x1 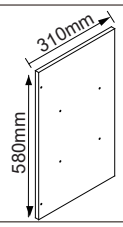	42 x1 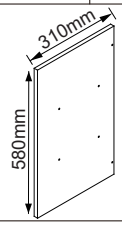	A x73+2 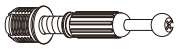 m7x40mm SCREW & PLASTIC LOCK	
B x73+2  15x9.5mm SCREW & METAL LOCK	C x82+2 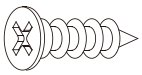 m3.5x12mm SCREW	D x7 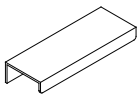 METAL PLATE	
E x16+2 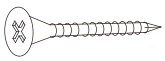 m5x45mm SCREW	F x1 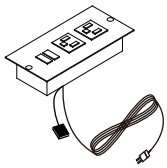 SOCKET	G x10 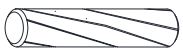 m6x30mm SCREW	
H x75+2 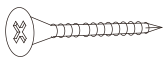 m4x40mm SCREW	I x1  HAIR DRYER HOLDER	J x4 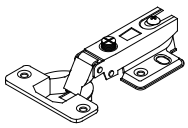 HINGE	CL x5 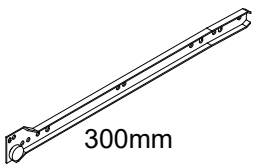 300mm
CR x5 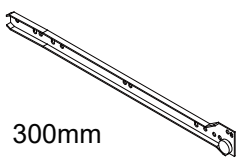 300mm	DL x5 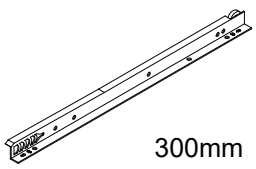 300mm	DR x5 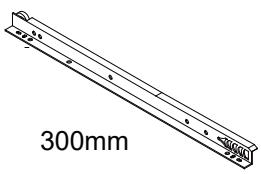 300mm	
LED x1 	K x12 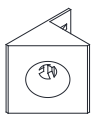	Q x16 	T x40+2 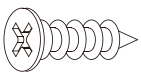 m4x14mm SCREW
R x10  X9 X1 X1			
M x14 	P x1 	N x4 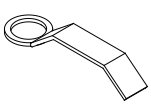	S x2 
L x4 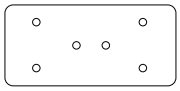			

★ In many cases, we include additional hardware. So after following the assembly instructions, don't worry if there are still extra pieces left over-they're included as a "just in case" for your convenience.

STEP 1

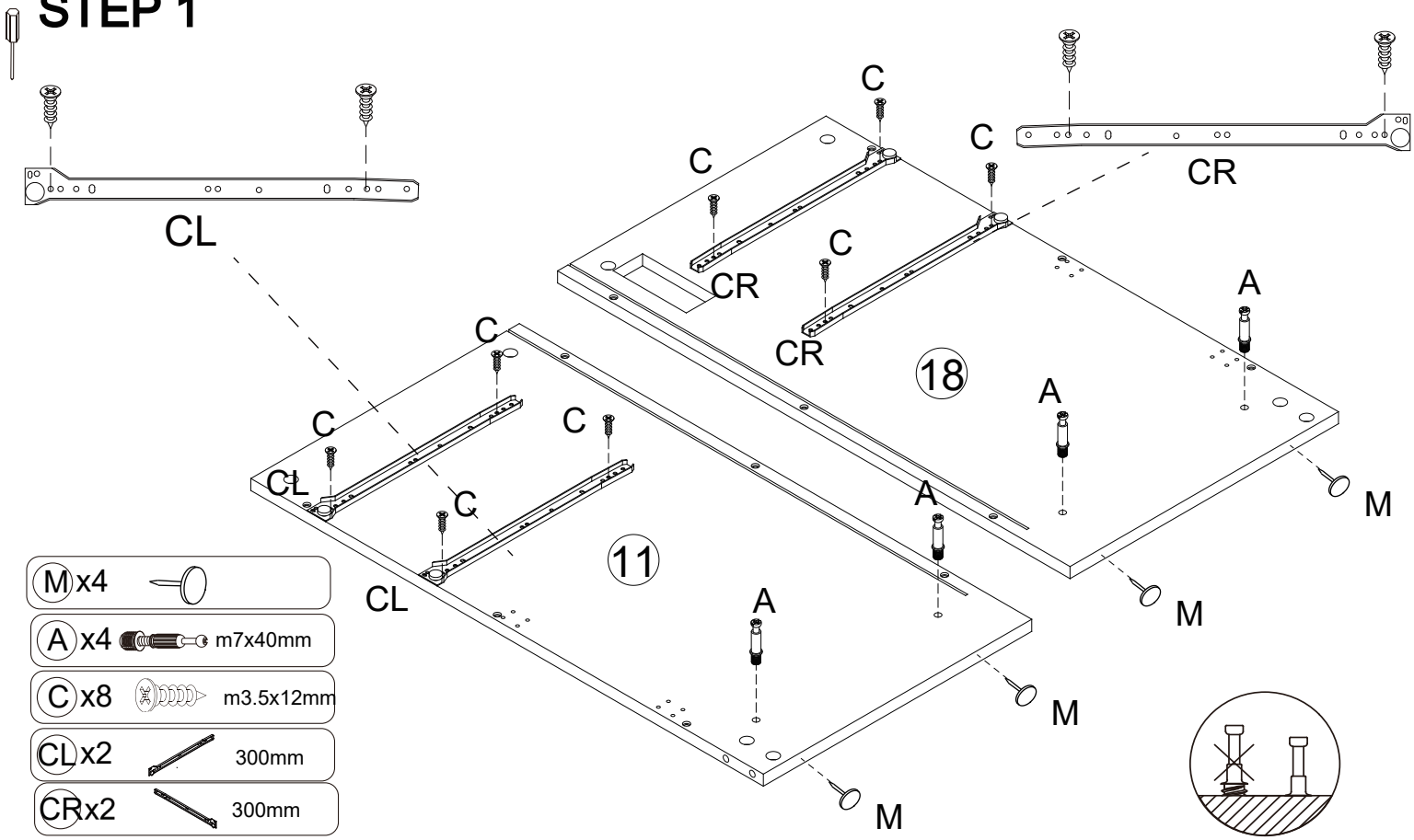

M x4	
A x4	m7x40mm
C x8	m3.5x12mm
CL x2	300mm
CR x2	300mm

STEP 2

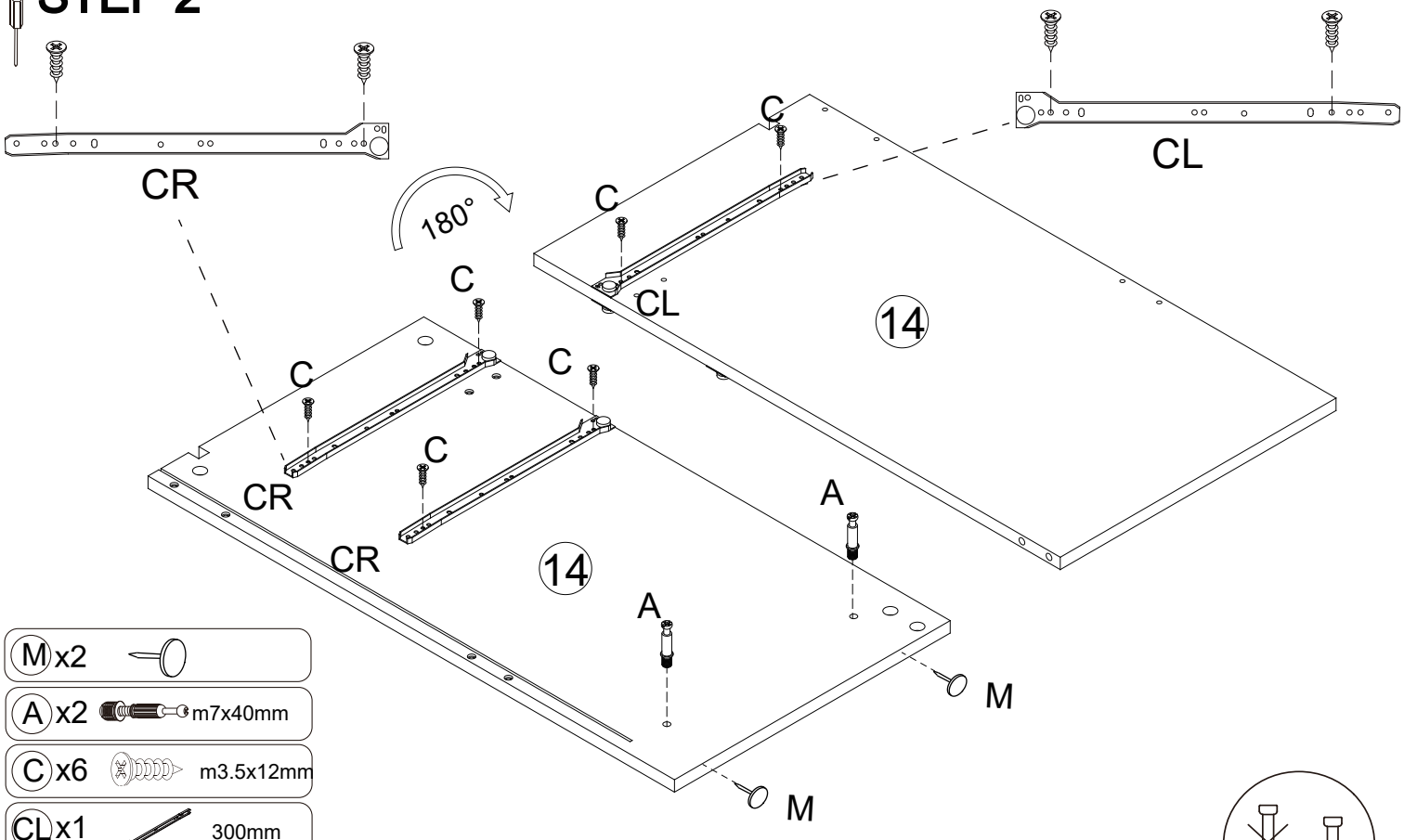

M x2	
A x2	m7x40mm
C x6	m3.5x12mm
CL x1	300mm
CR x2	300mm

STEP 3

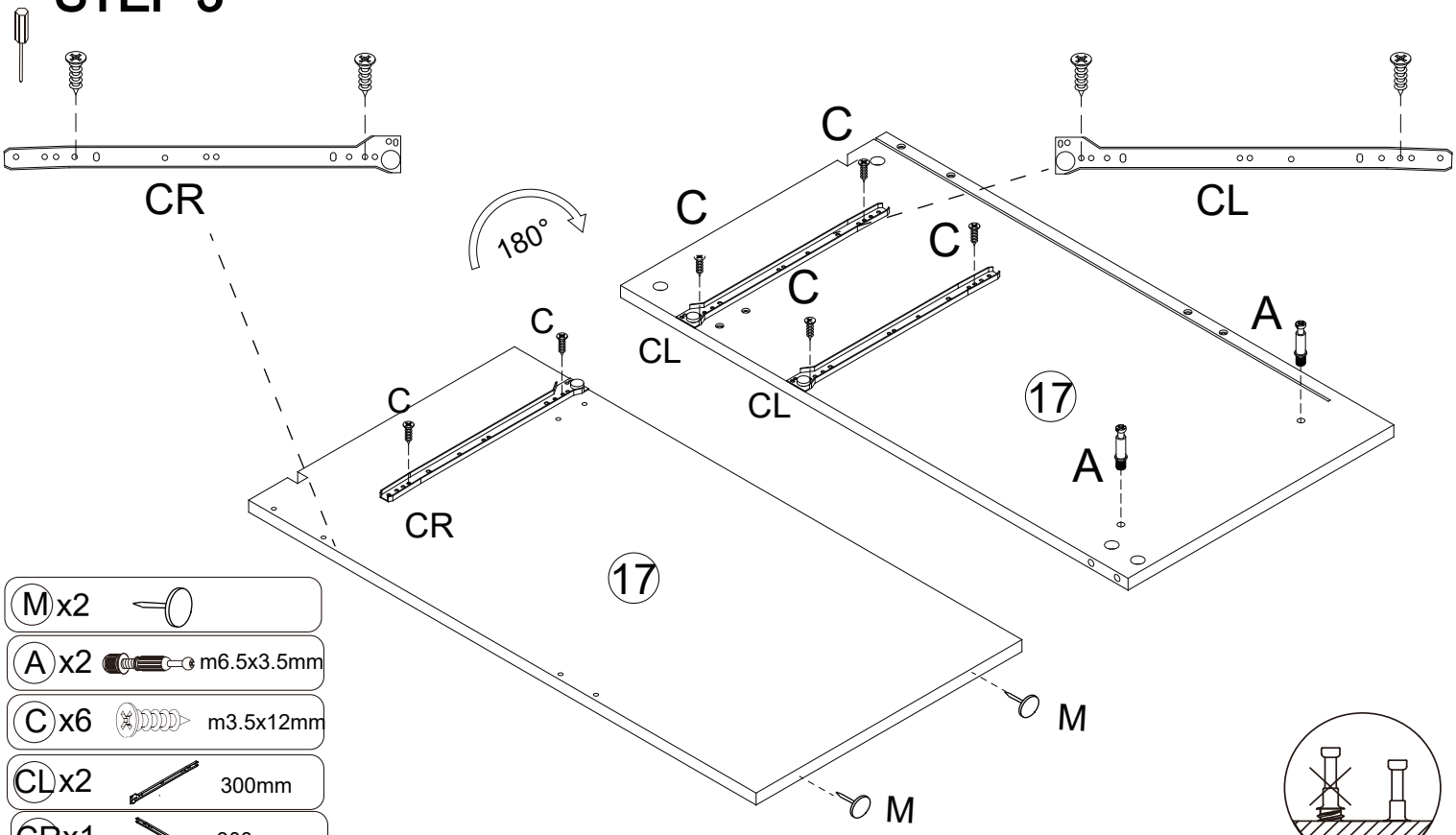

M x2	
A x2	m6.5x3.5mm
C x6	m3.5x12mm
CL x2	300mm
CR x1	300mm

STEP 4

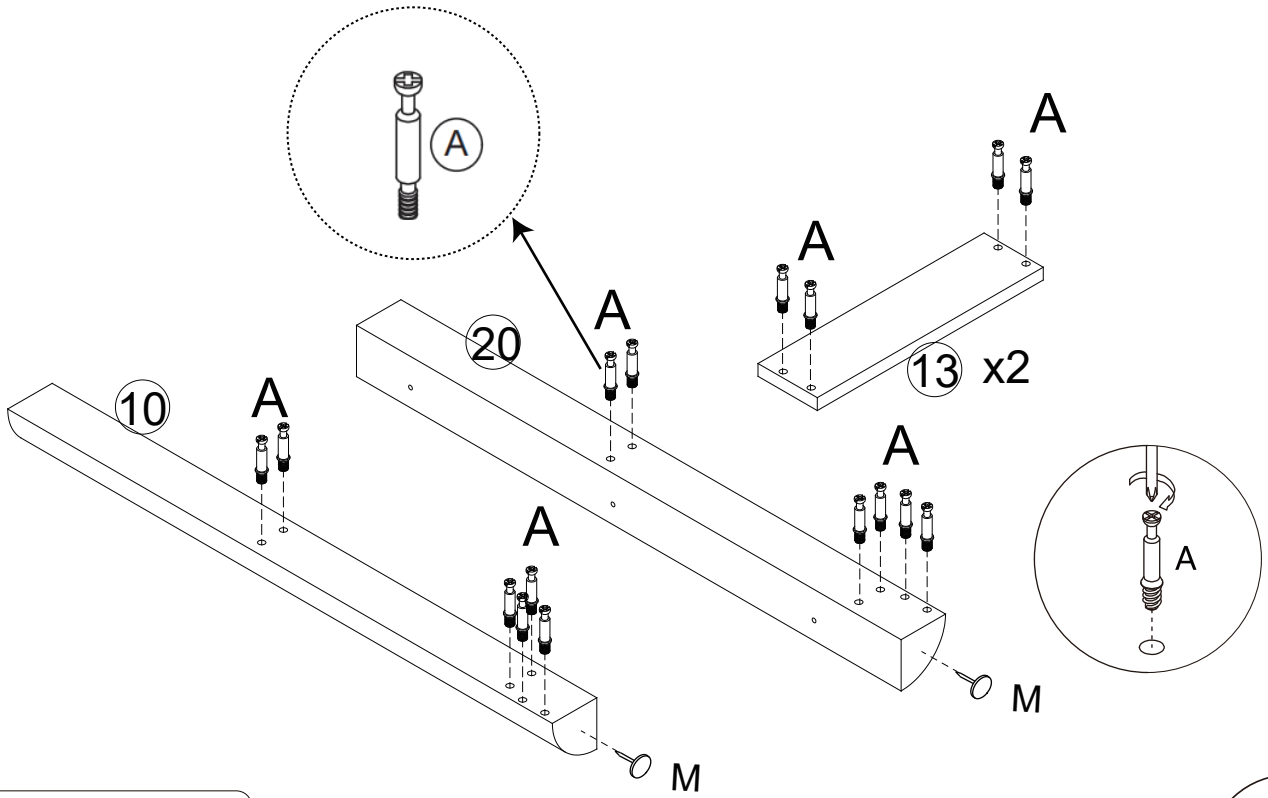

M x2	
A x20	m7x40mm

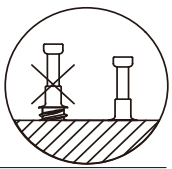

STEP 5

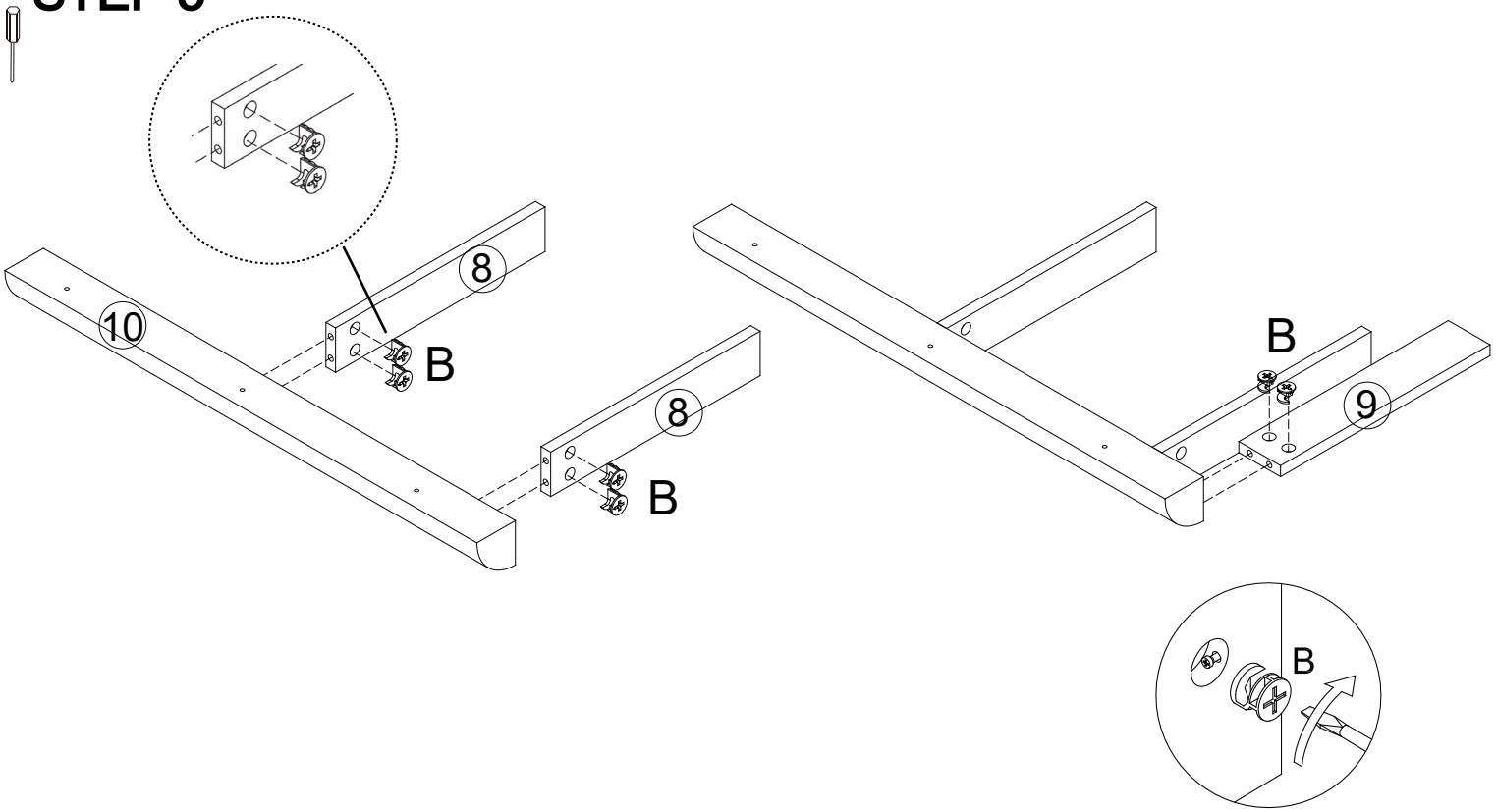

(B) x6 15x9.5mm

STEP 6

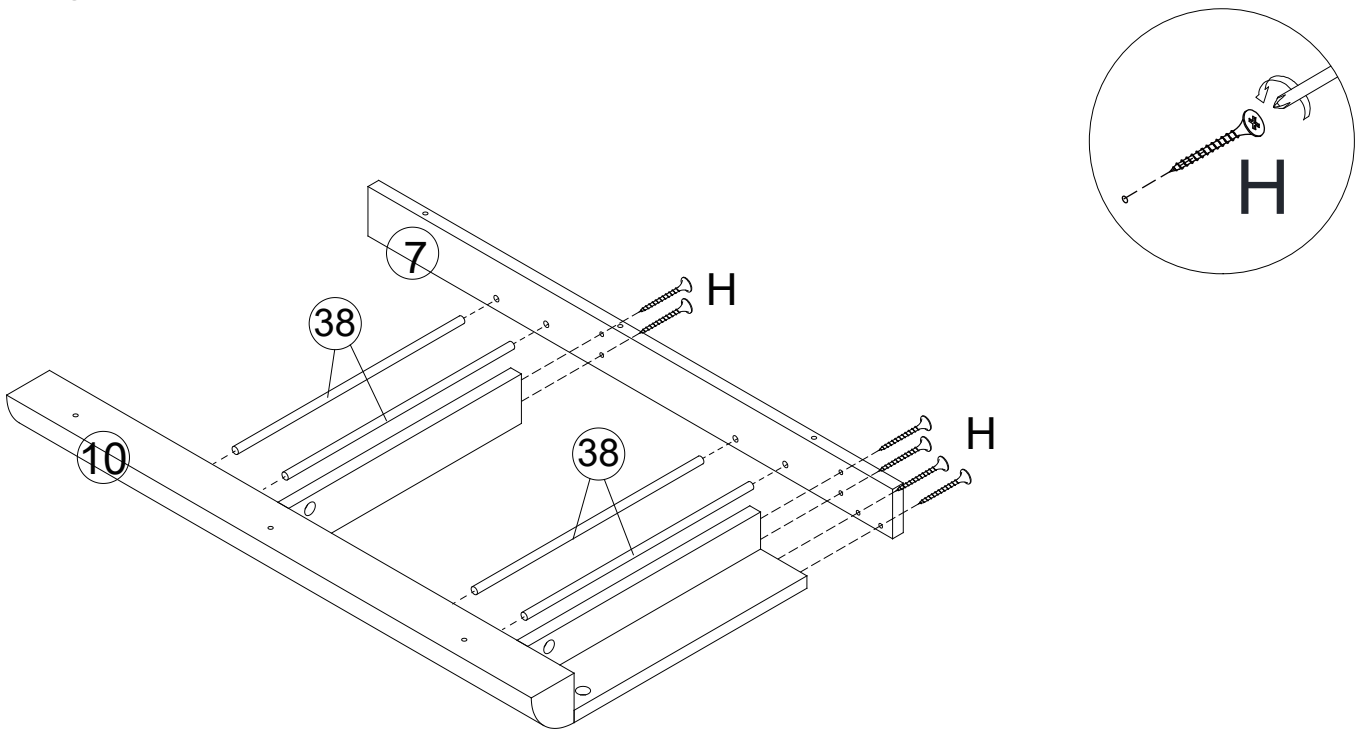

(H) x6 m4x40mm

STEP 7

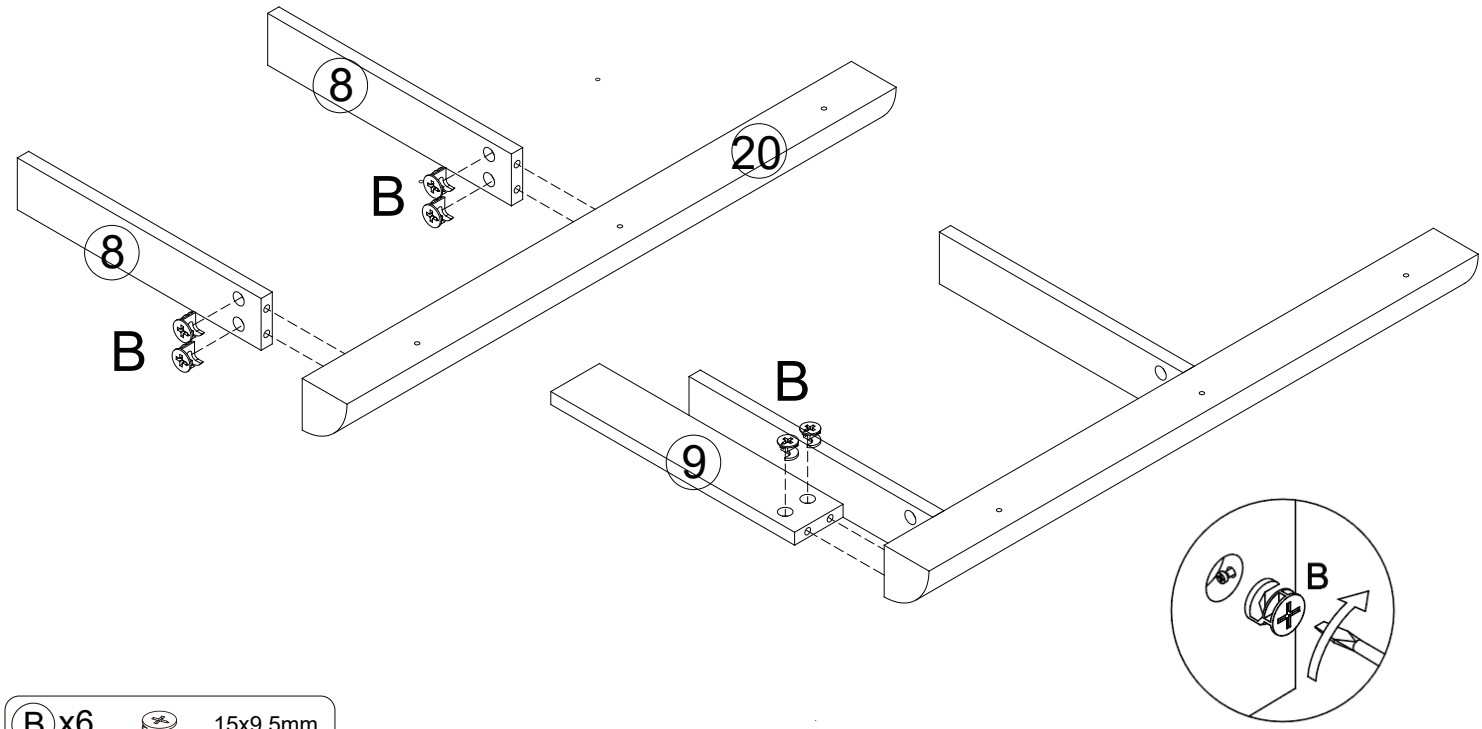

Ⓑ x6 15x9.5mm

STEP 8

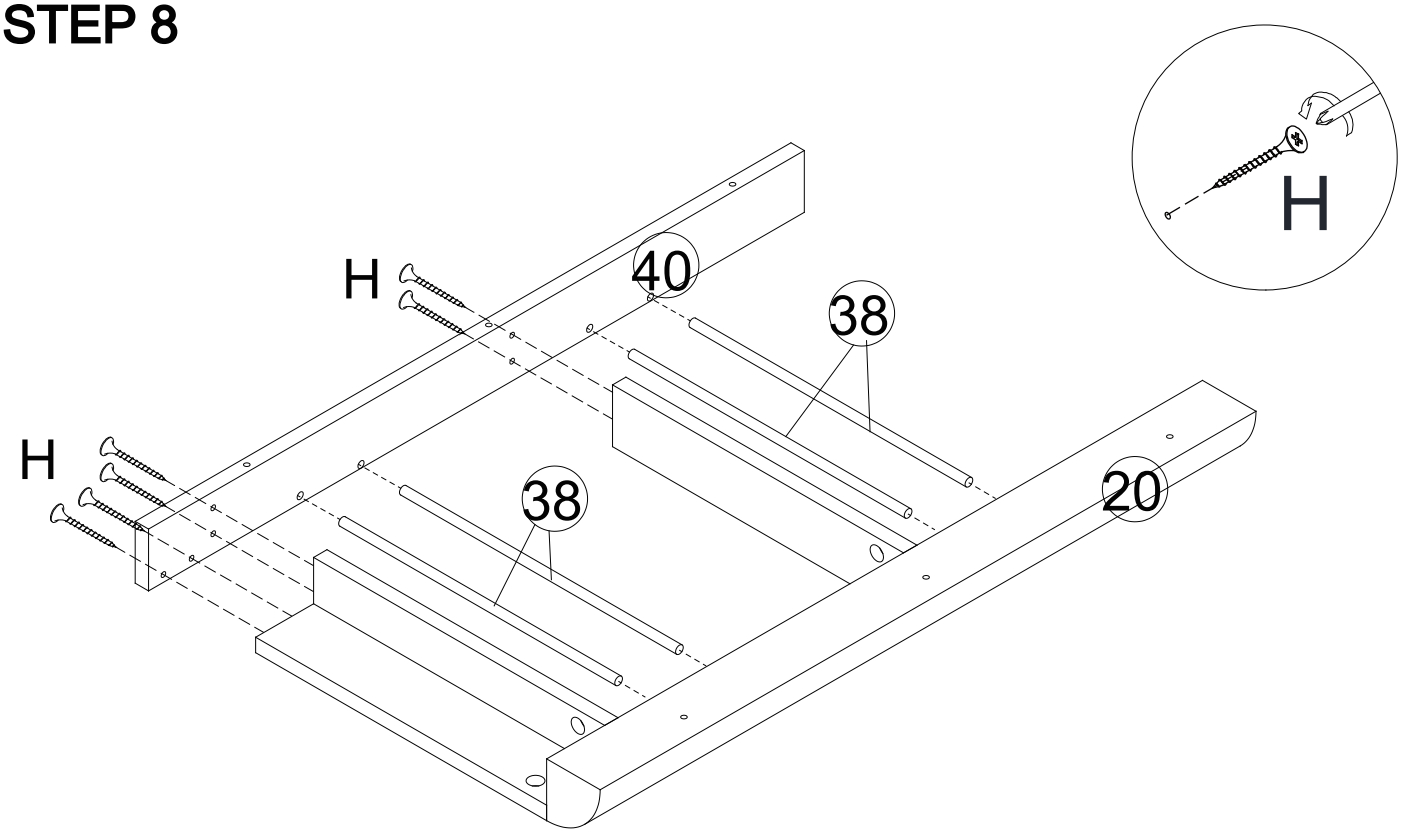

Ⓗ x6 m4x40mm

STEP 9

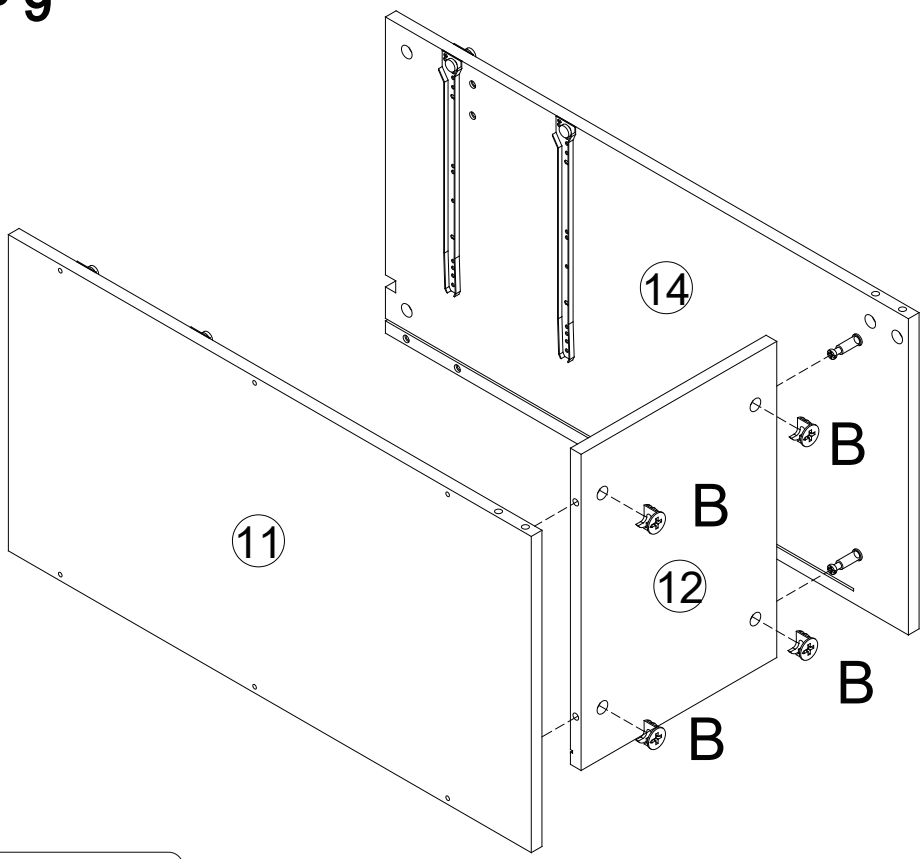

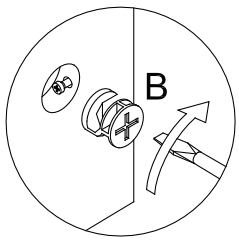

(B) x4 15x9.5mm

STEP 10

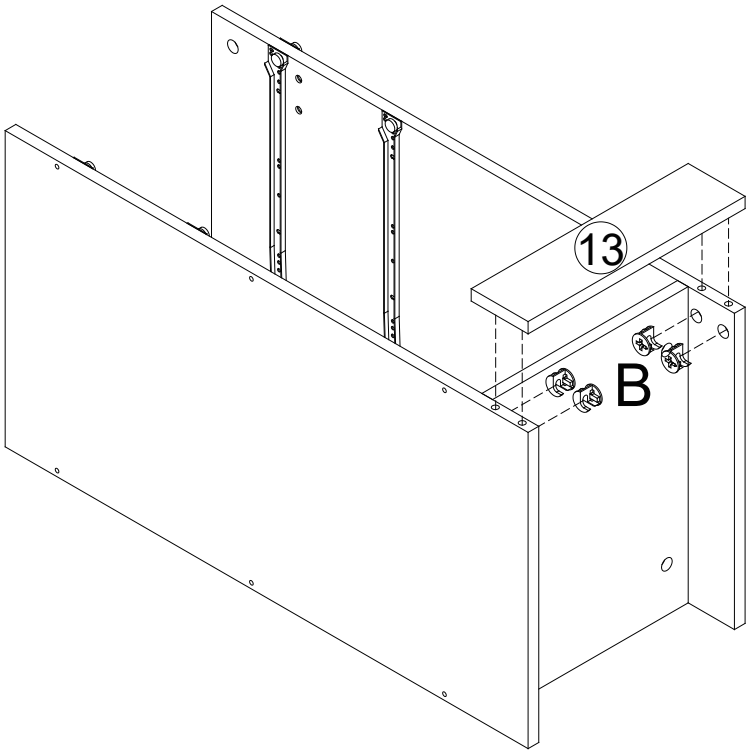

(B) x4 15x9.5mm

STEP 11

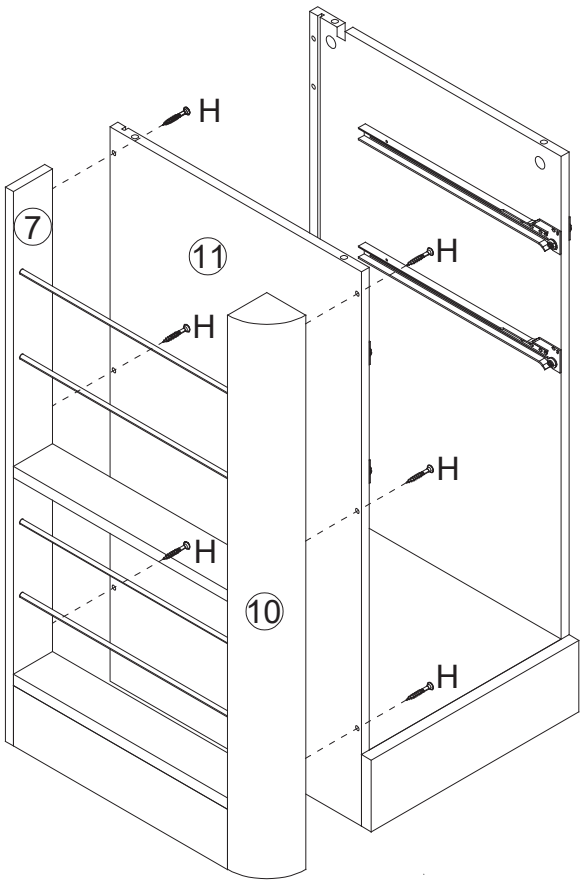

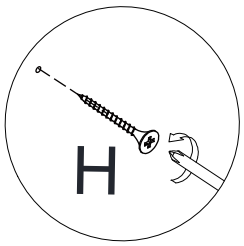

(H) x6 m4x40mm

STEP 12

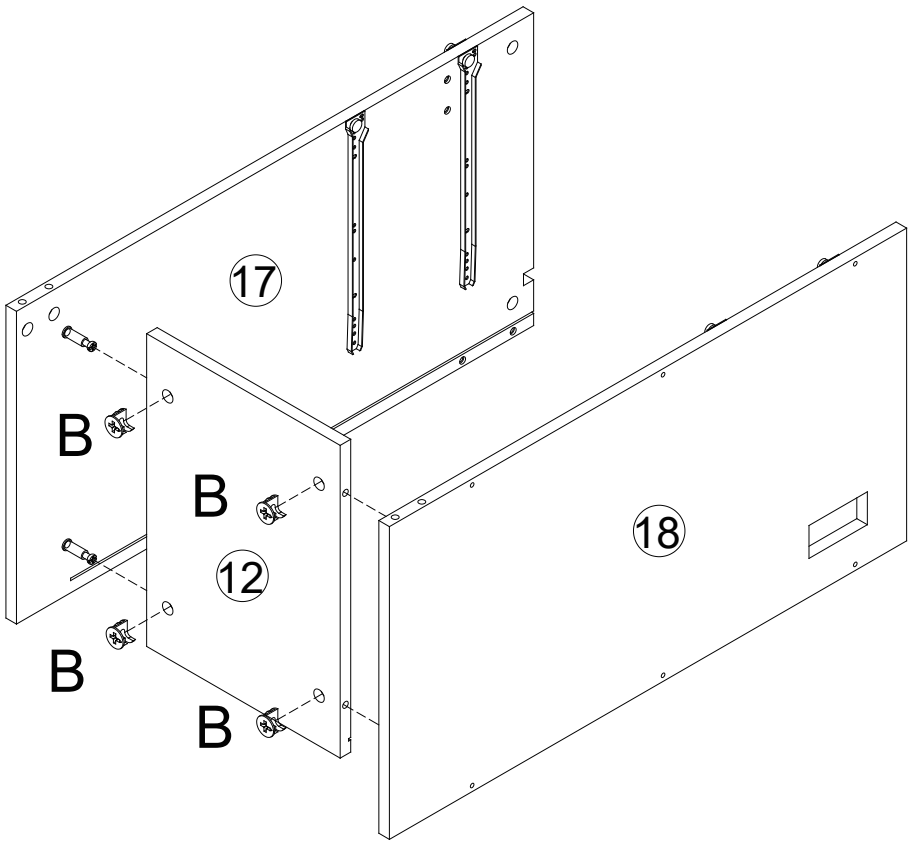

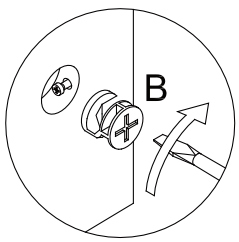

(B) x4 15x9.5mm

STEP 13

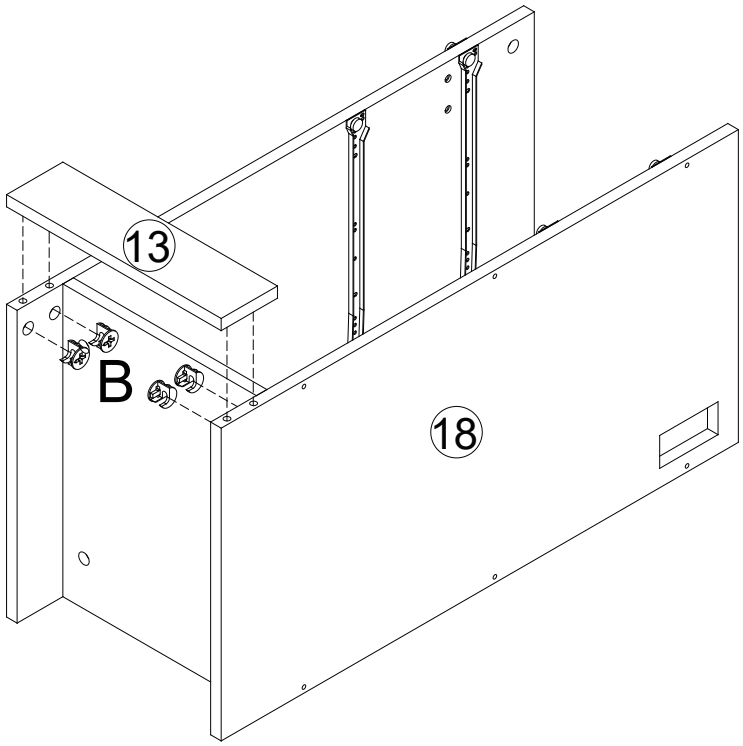

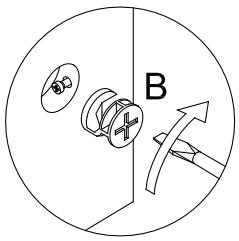

(B) x4  15x9.5mm

STEP 14

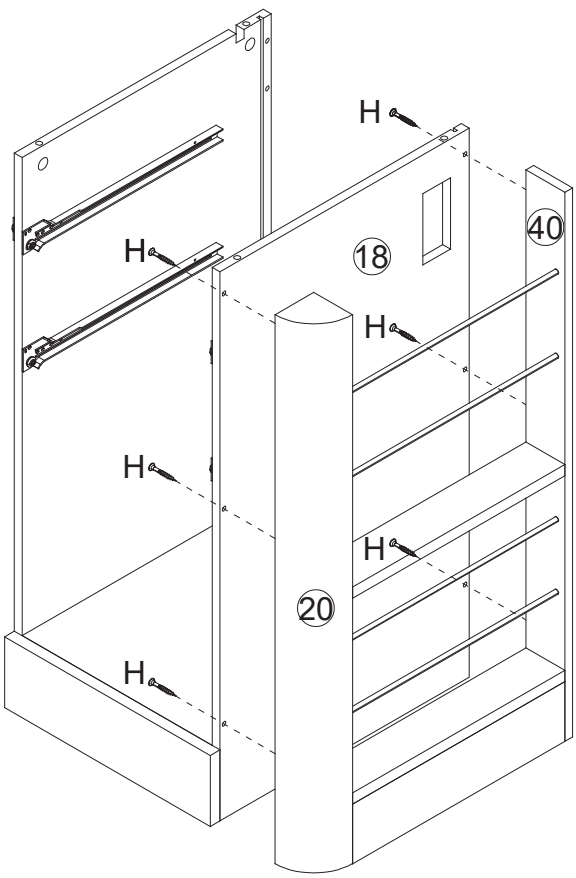

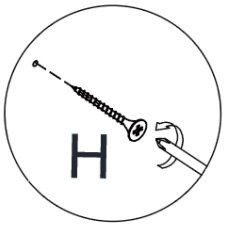

(H) x6  m4x40mm

STEP 15

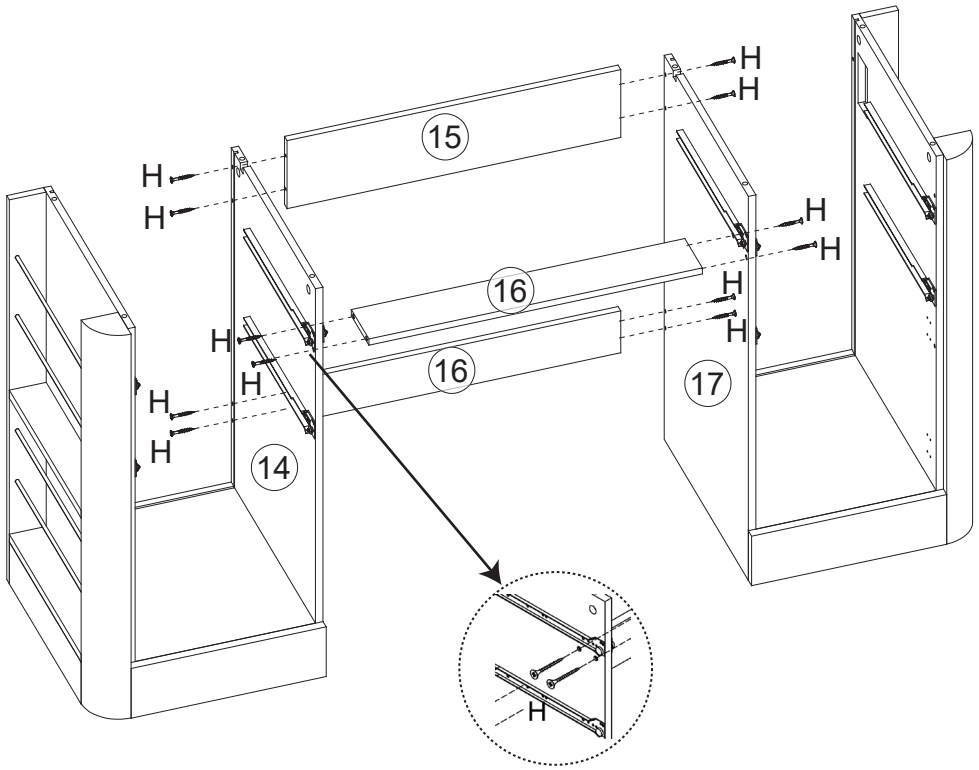

Hx12 m4x40mm

STEP 16

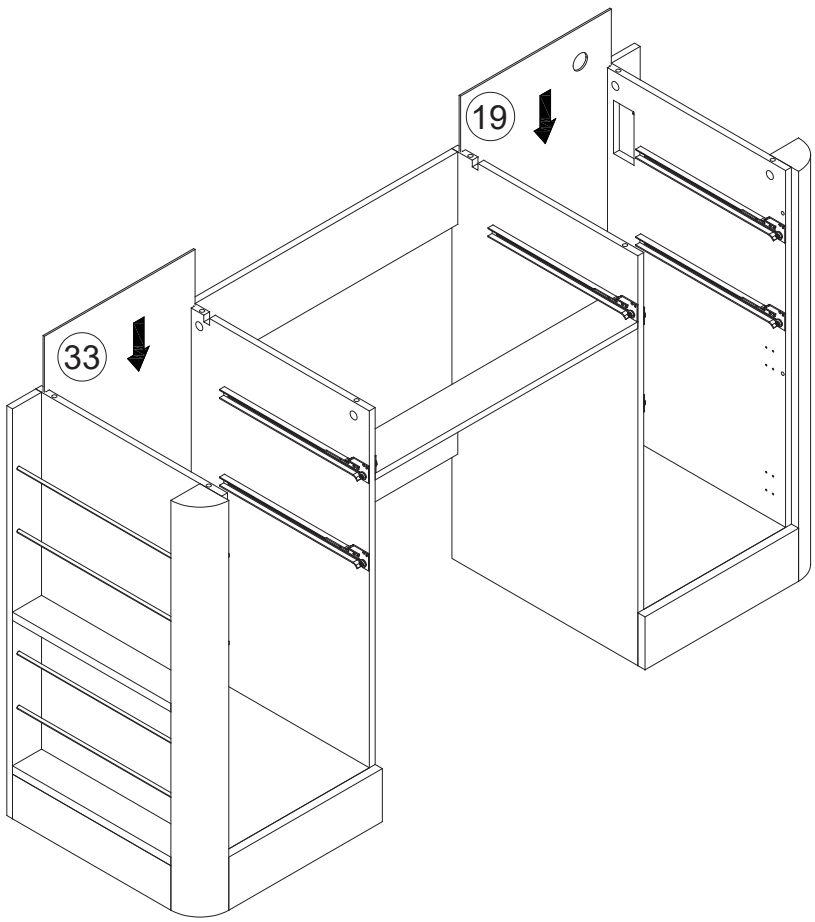

STEP 17

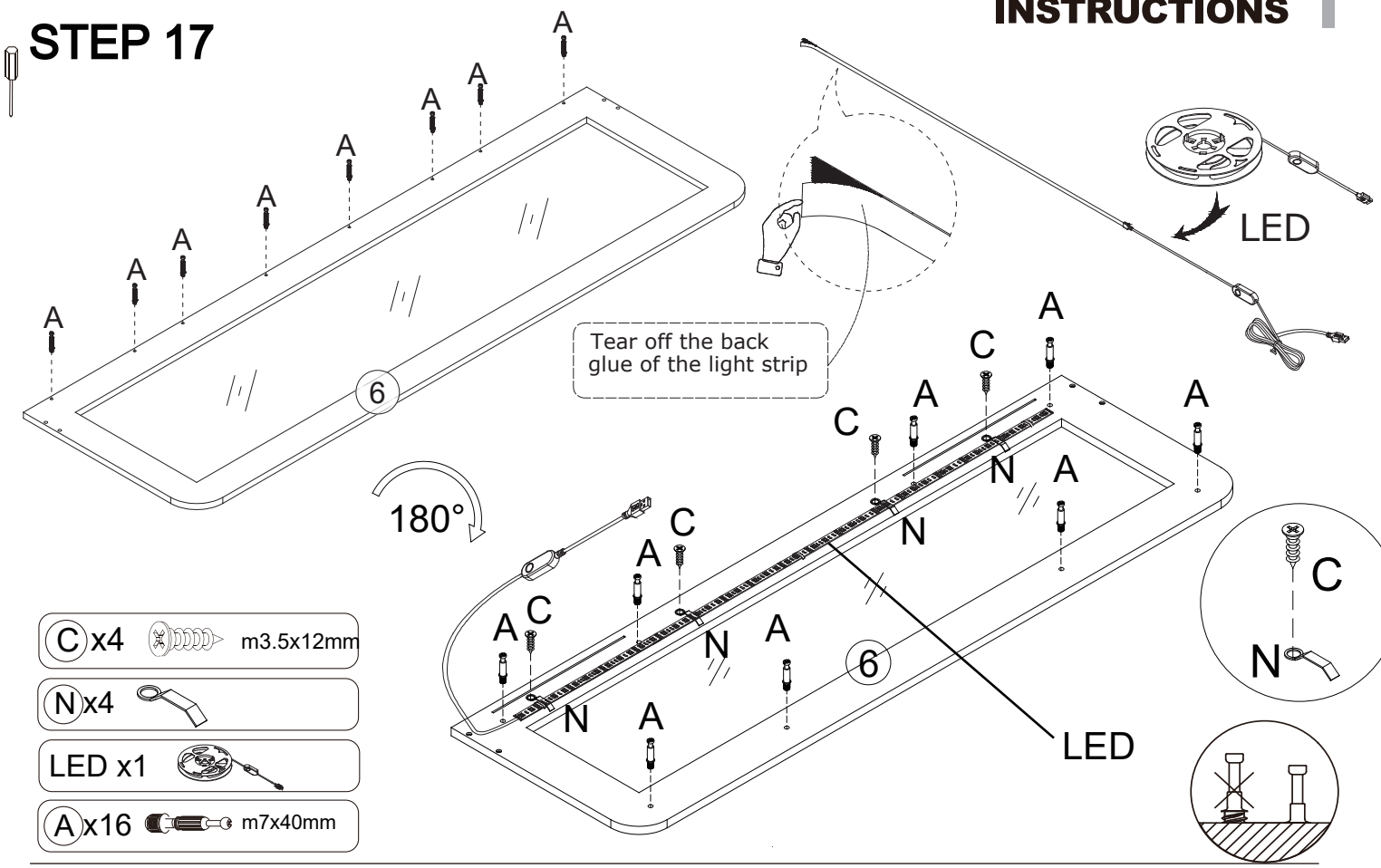

- C x4 m3.5x12mm
- N x4
- LED x1
- A x16 m7x40mm

STEP 18

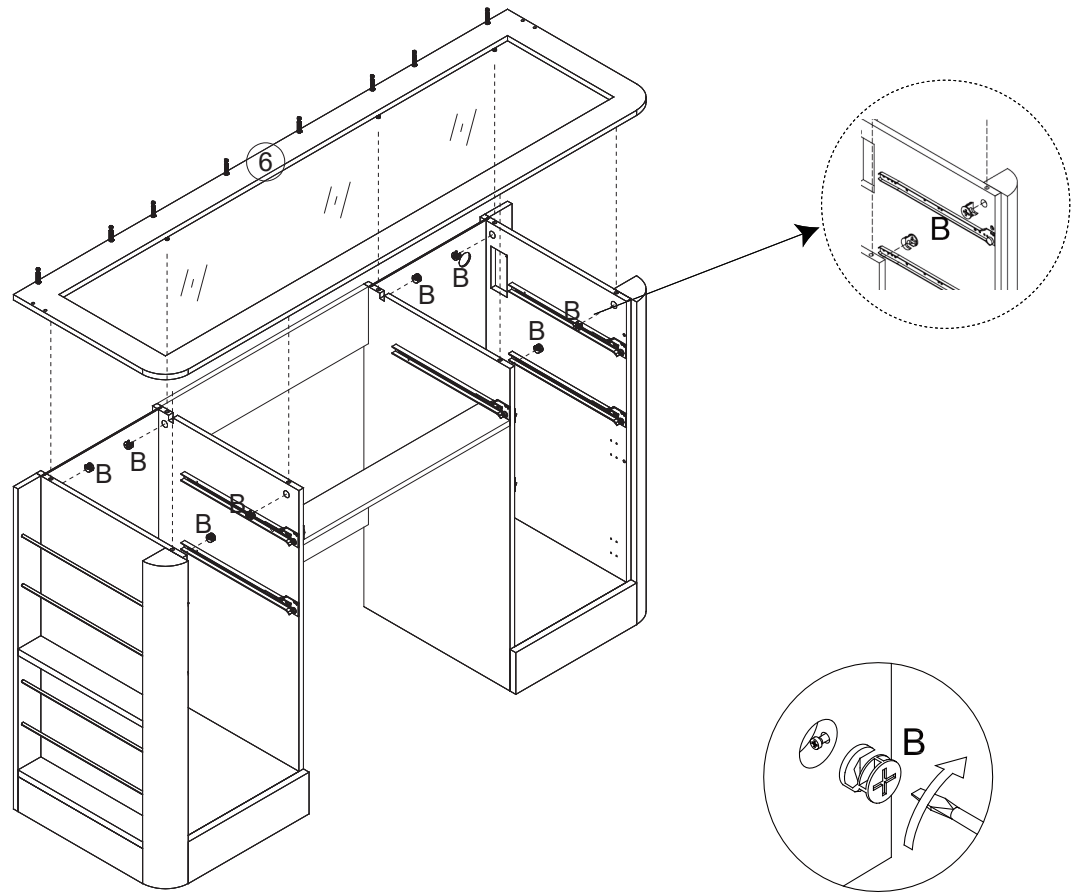

- B x8 15x9.5mm

STEP 19

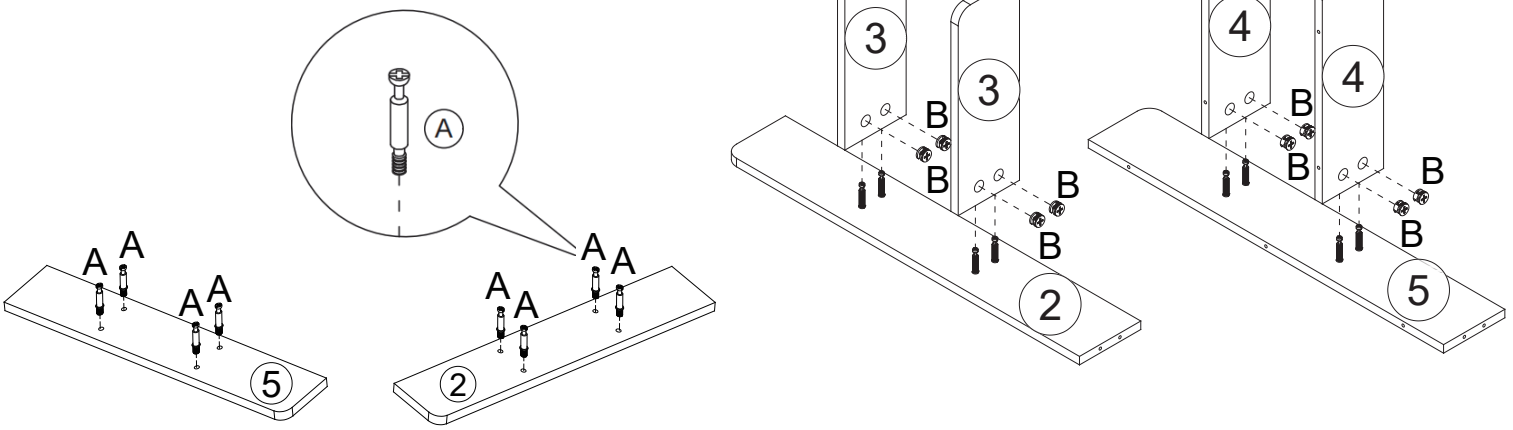

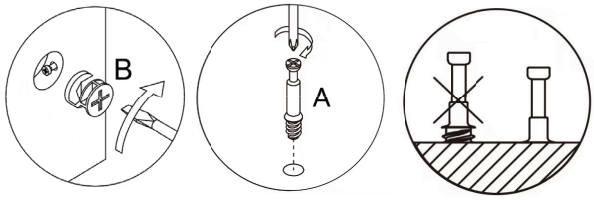

A x8 m6.5x3.5mm

B x8 15x9.5mm

STEP 20

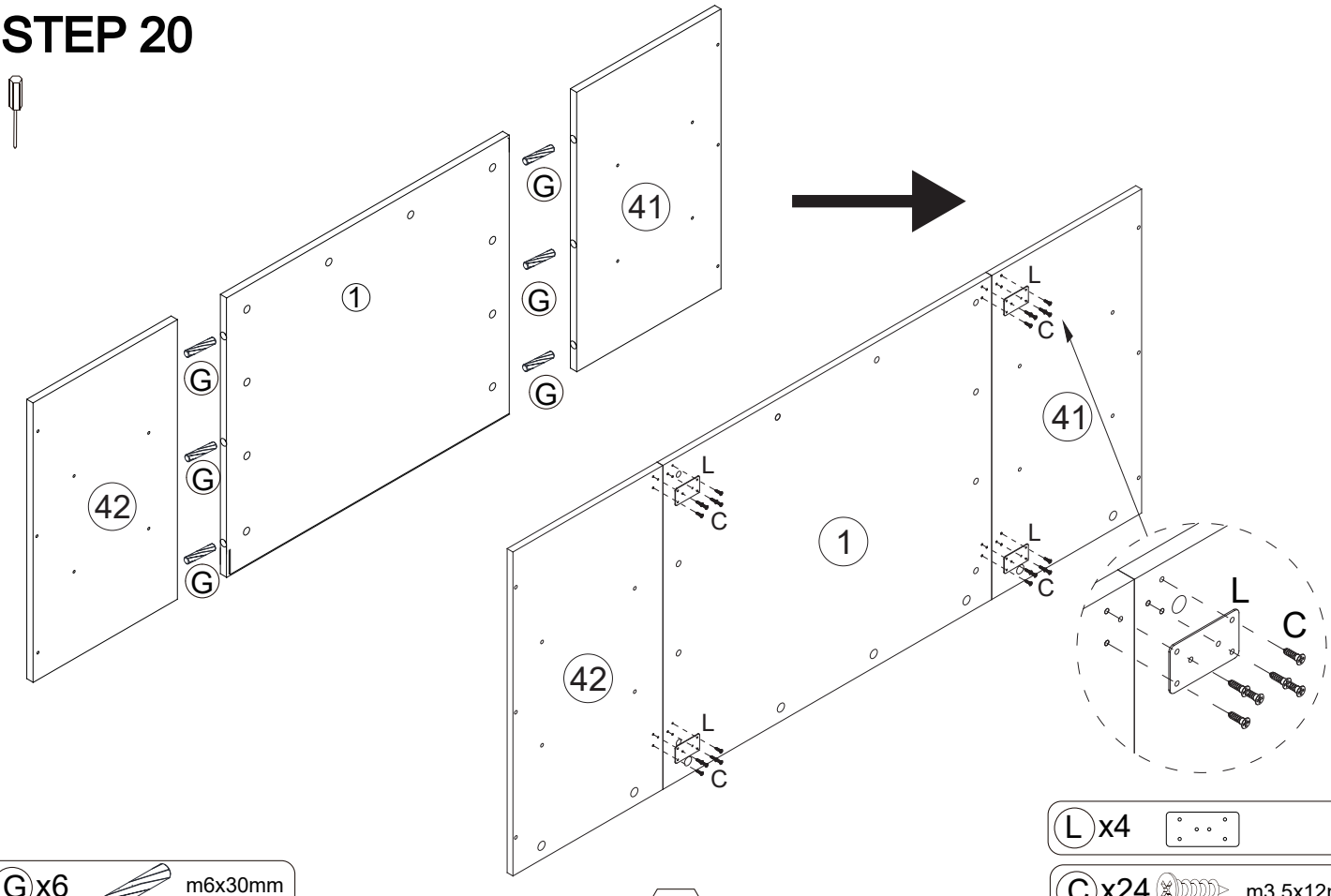

G x6 m6x30mm

L x4

C x24 m3.5x12mm

STEP 21

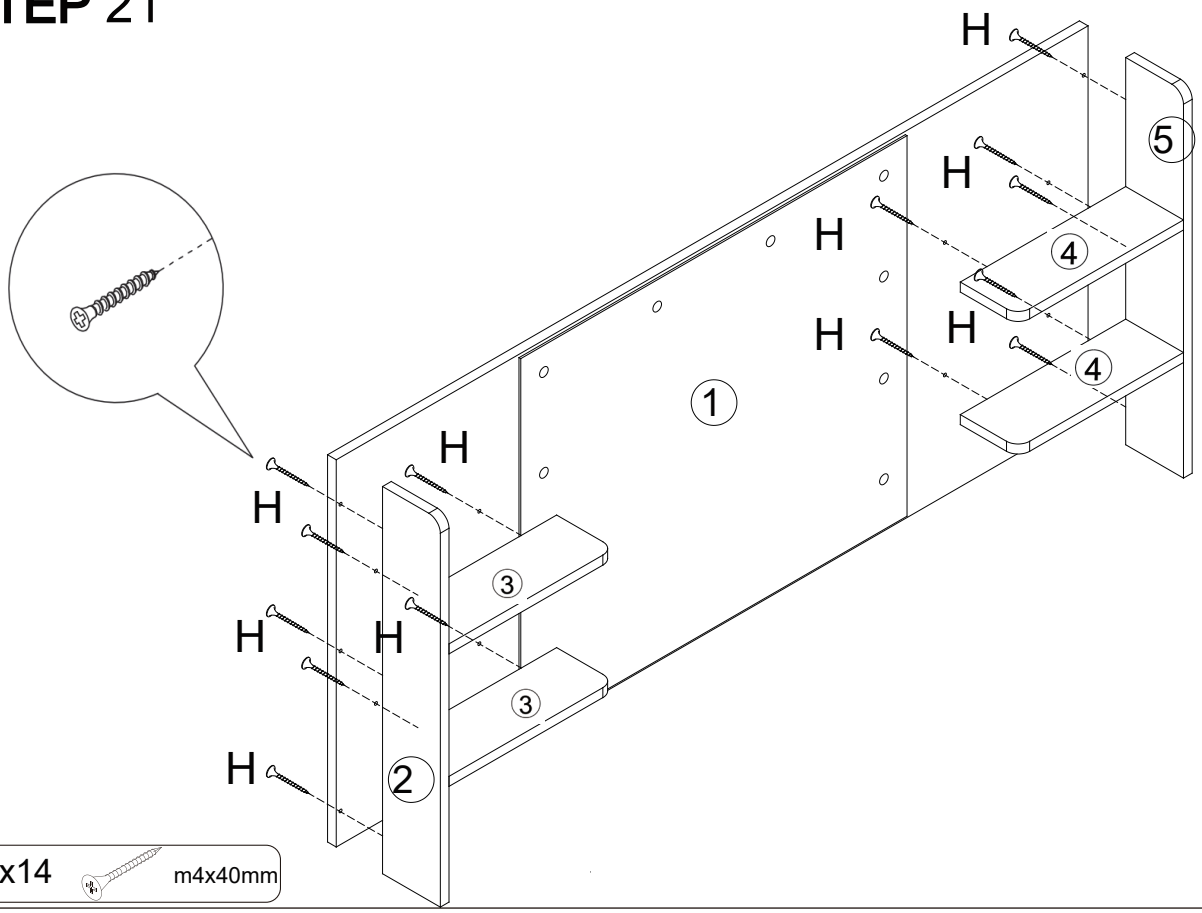

(H) x14 m4x40mm

STEP 22

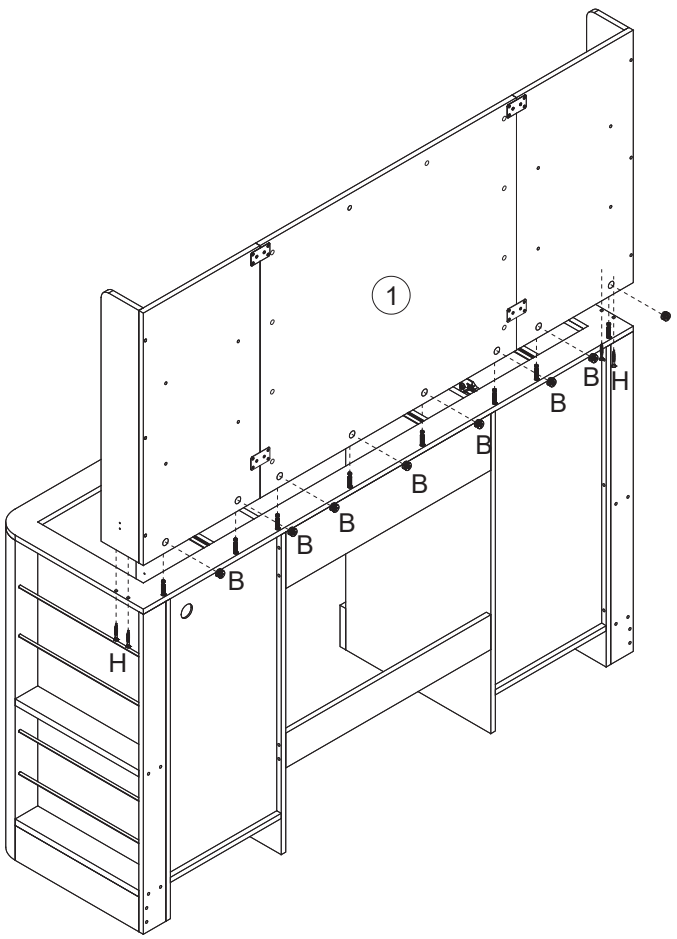

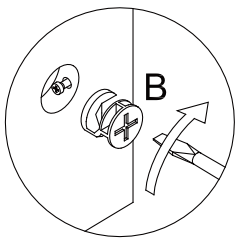

(B) x8 15x9.5mm

(H) x4 m4x40mm

STEP 23

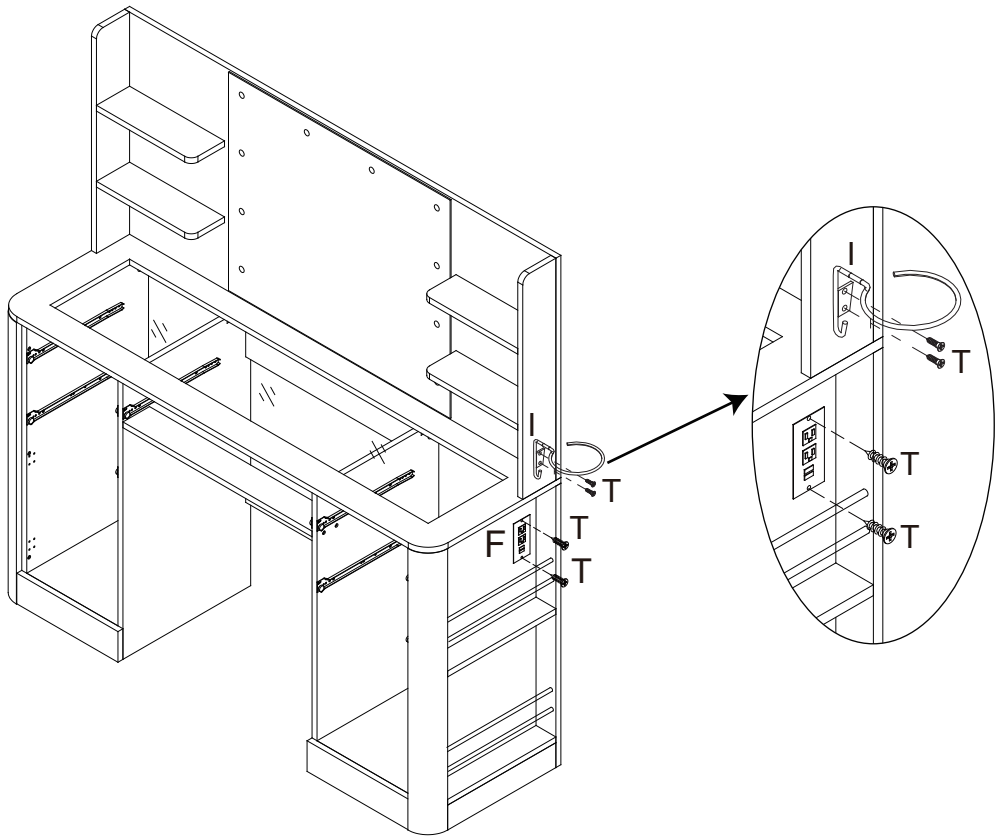

I x1

T x4 m4x14mm

F x1

STEP 24

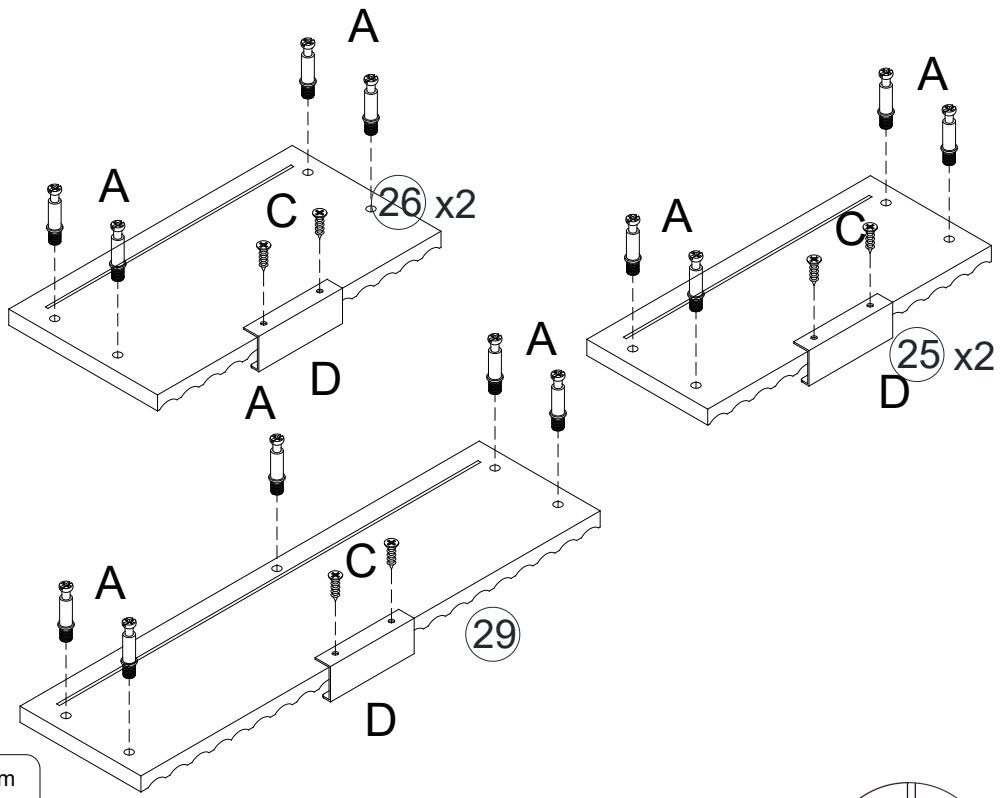

A x21 m7x40mm

C x10 m3.5x12mm

D x5

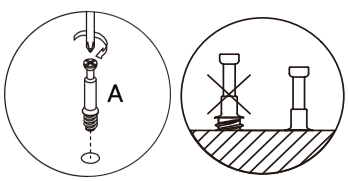

STEP 25

x2

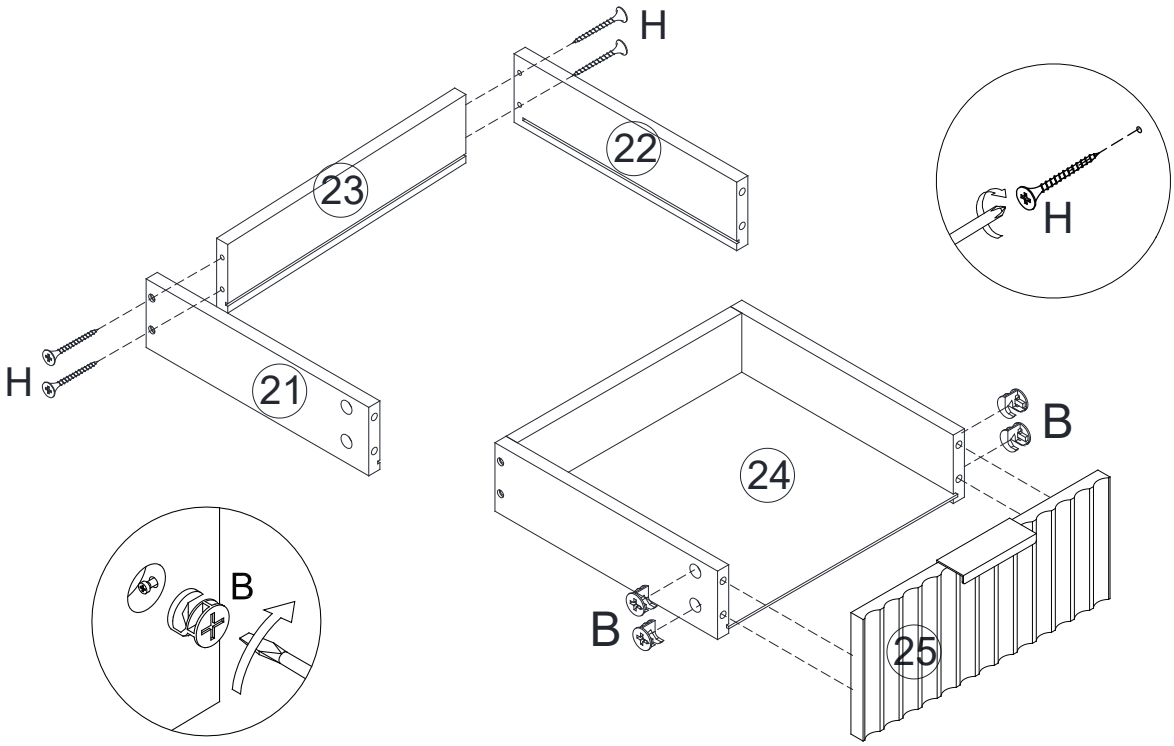

H x8 m4x40mm

B x8 15x9.5mm

STEP 26

x2

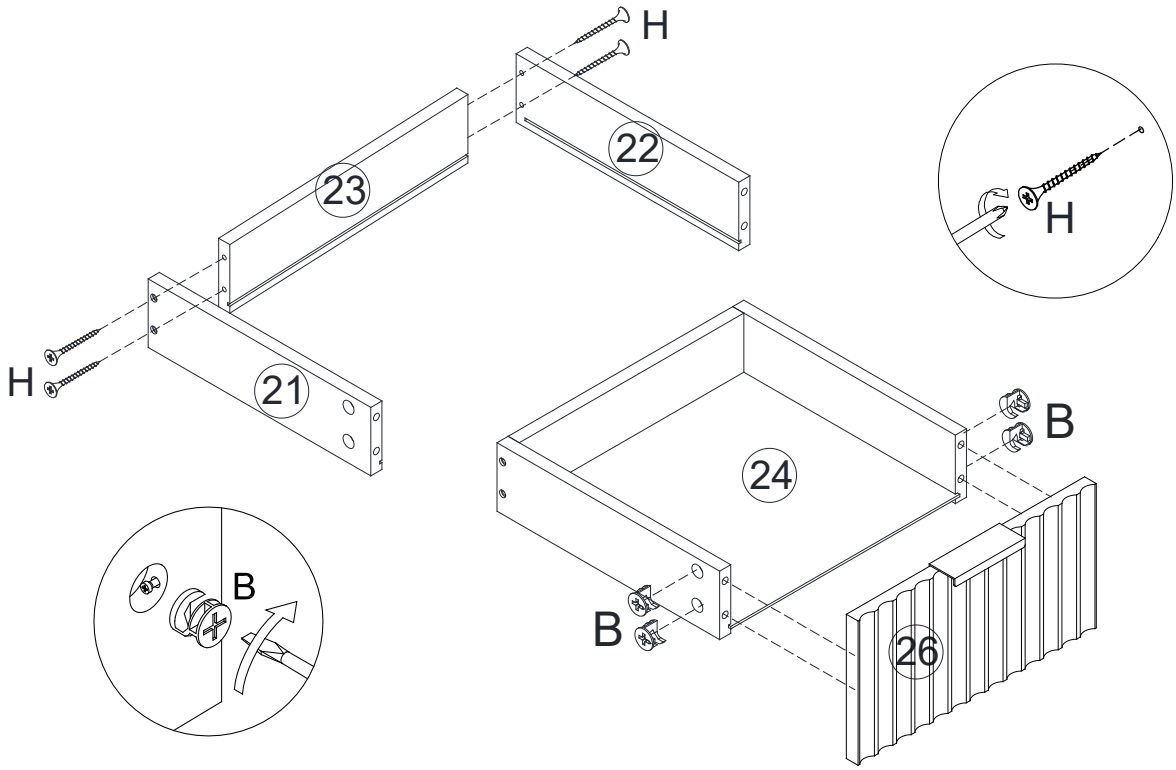

H x8 m4x40mm

B x8 15x9.5mm

STEP 27

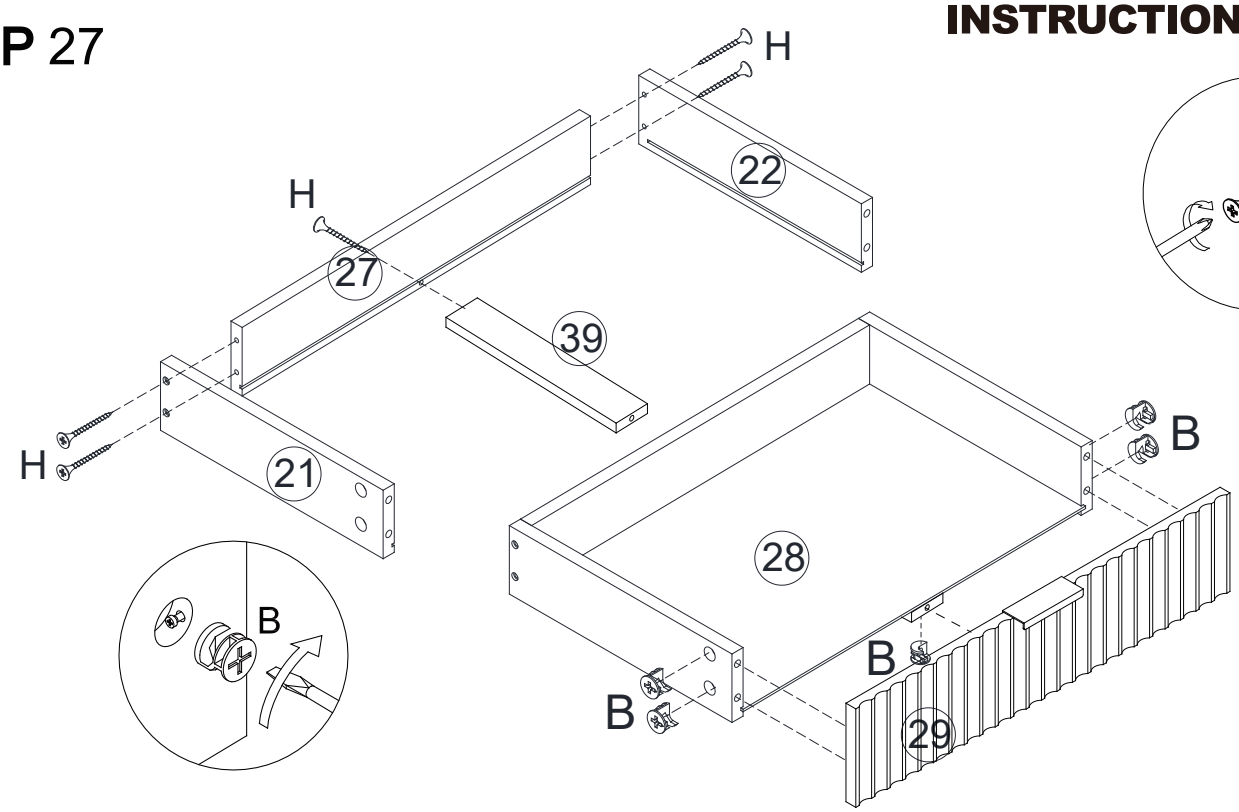

H x5		m4x40mm
B x5		15x9.5mm

STEP 28

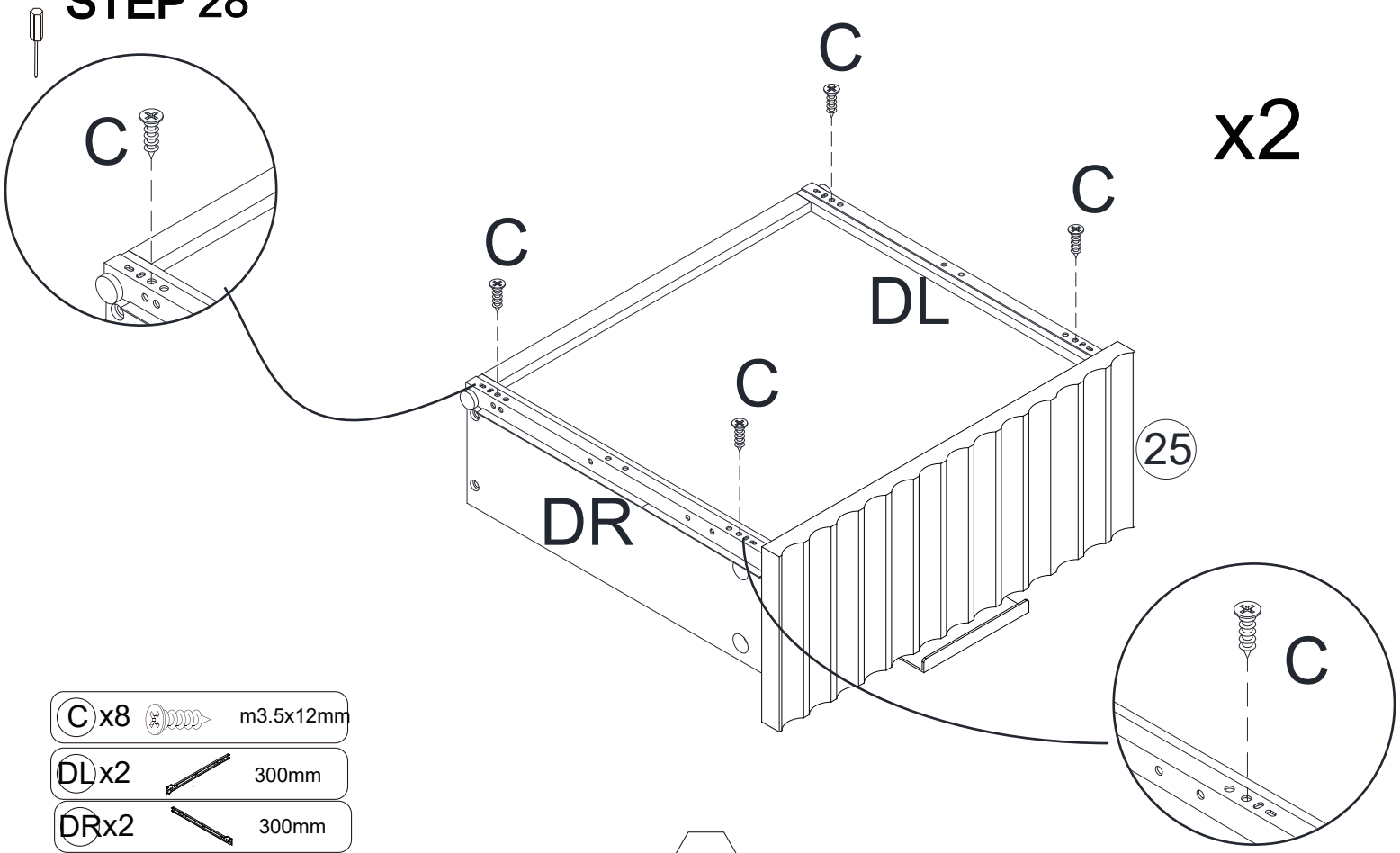

C x8		m3.5x12mm
DL x2		300mm
DR x2		300mm

STEP 29

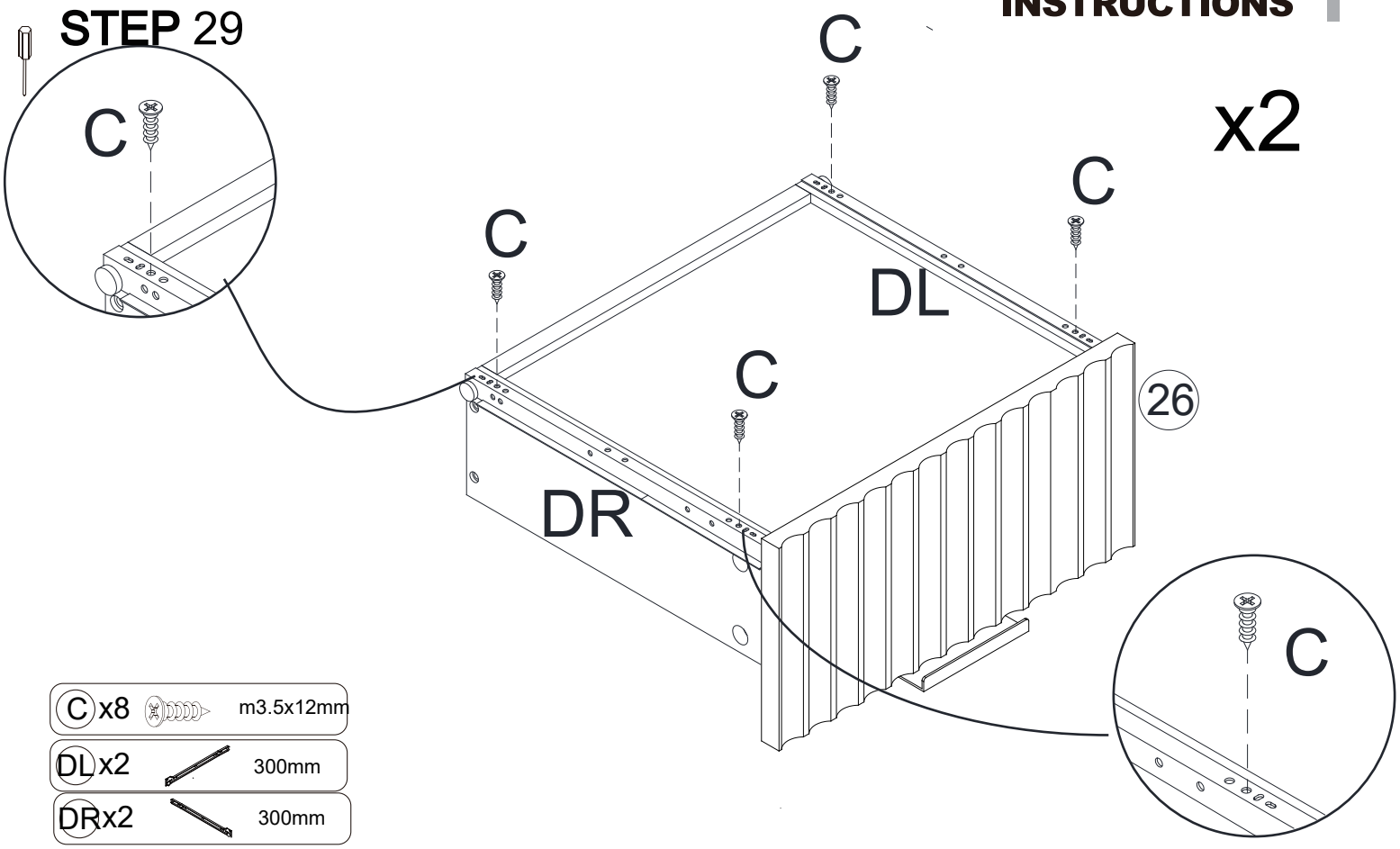

x2

C x8	m3.5x12mm	
DL x2	300mm	
DR x2	300mm	

STEP 30

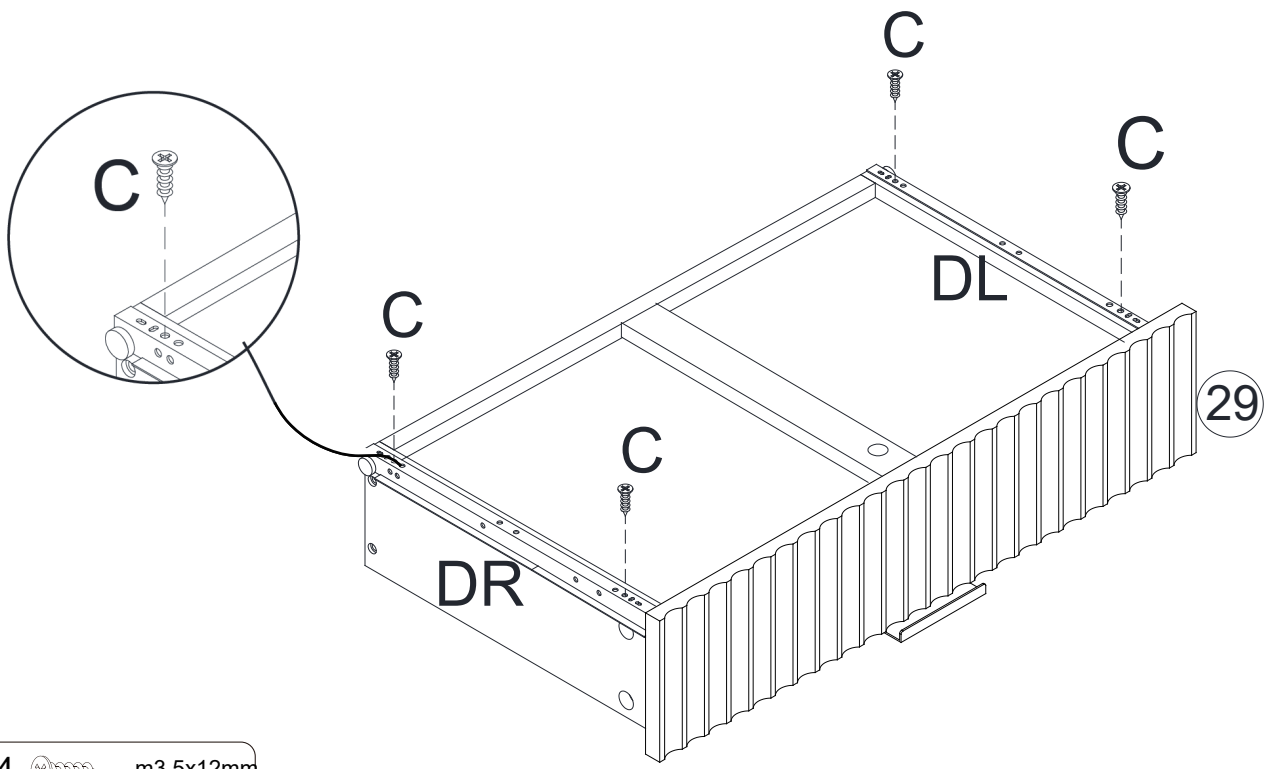

C x4	m3.5x12mm	
DL x1	300mm	
DR x1	300mm	

STEP 31

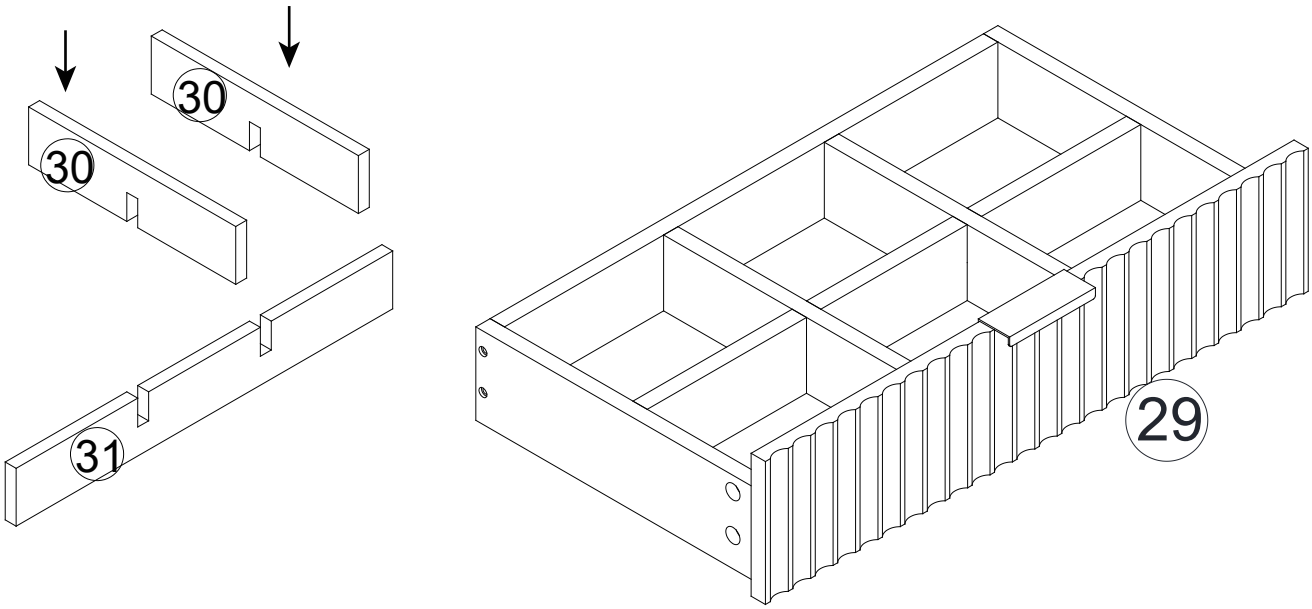

STEP 32

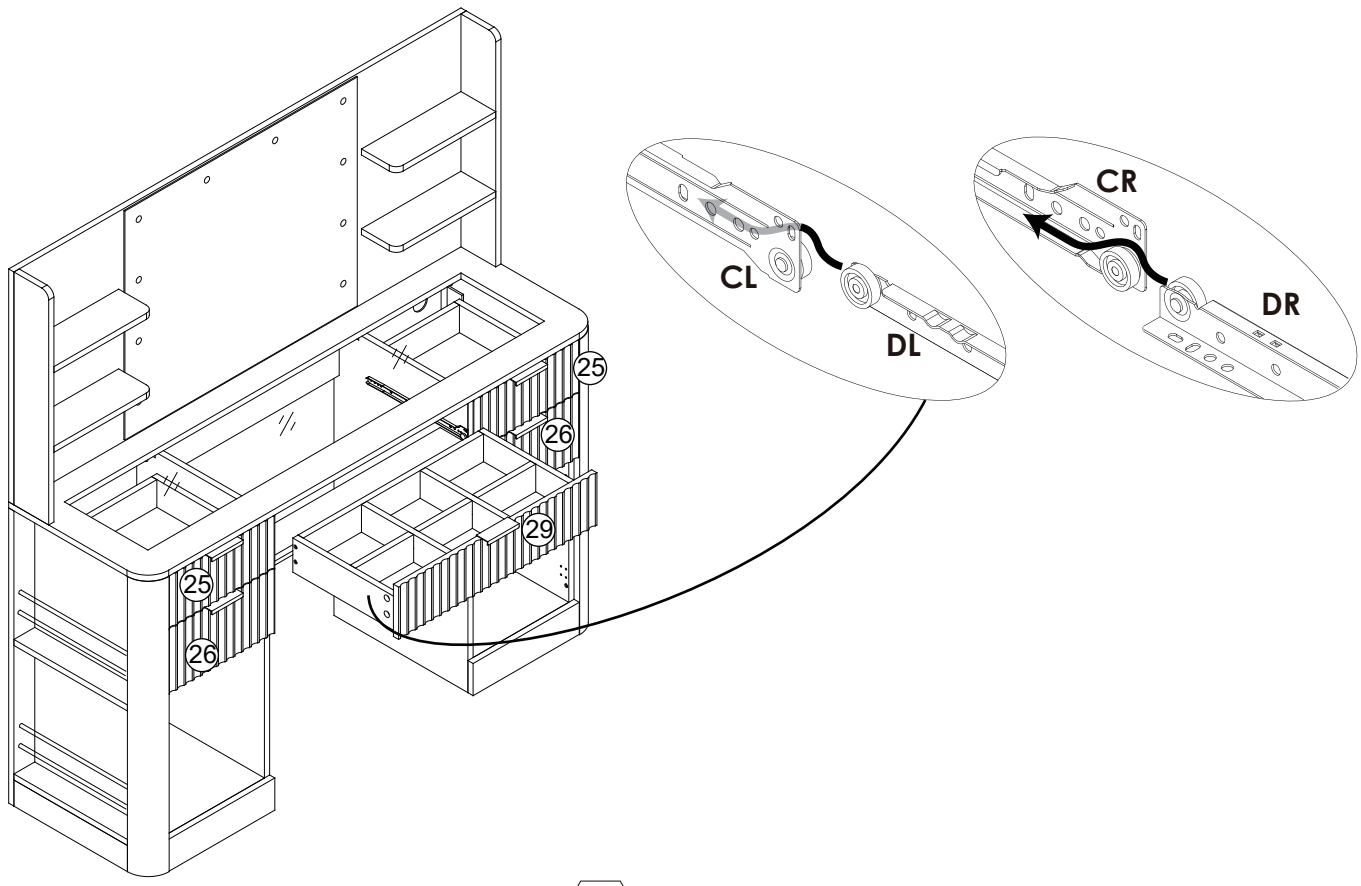

STEP 33

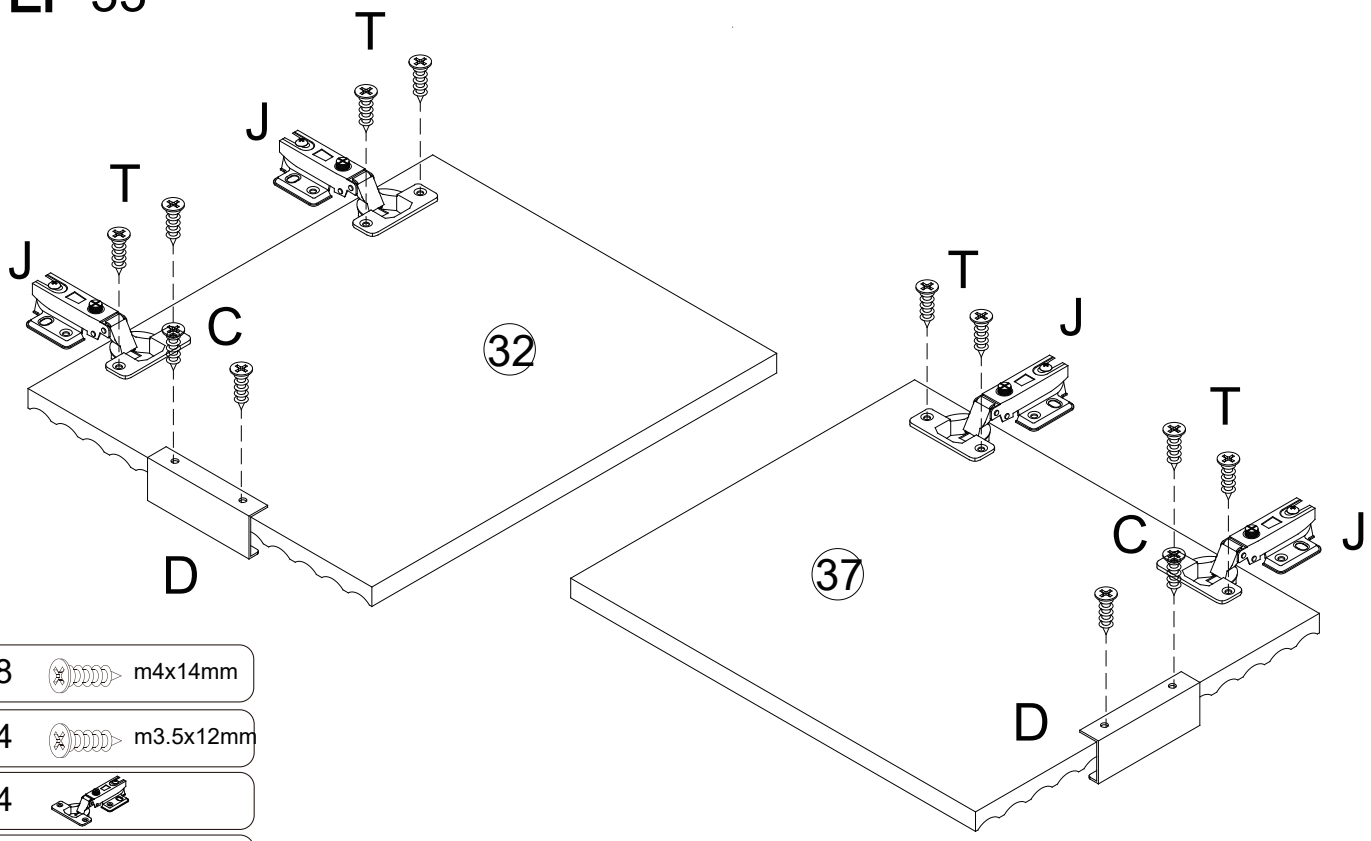

- (T) x8 m4x14mm
- (C) x4 m3.5x12mm
- (J) x4
- (D) x2

STEP 34

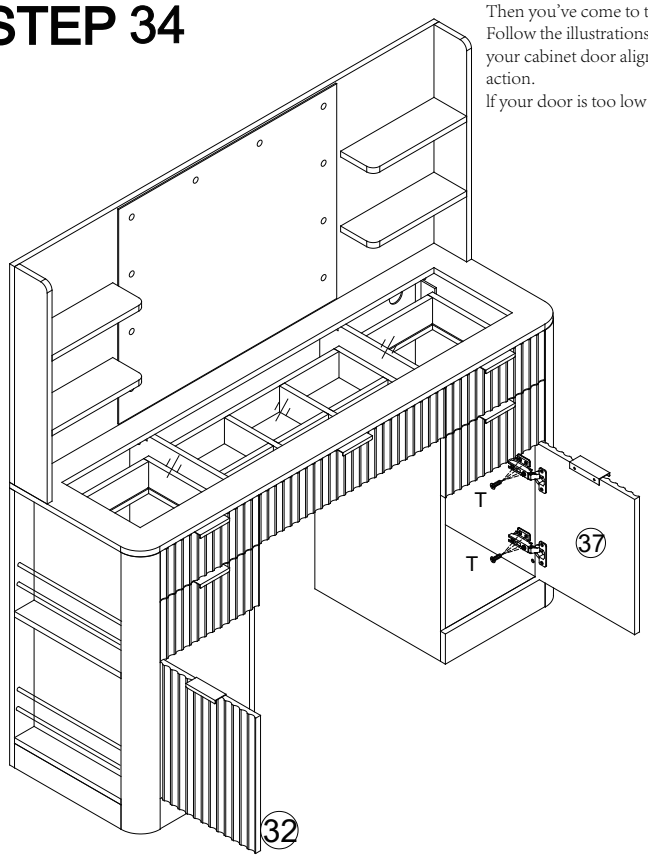

Then you've come to the right place.
Follow the illustrations below to get your cabinet door aligned and ready for action.
If your door is too low or too high...

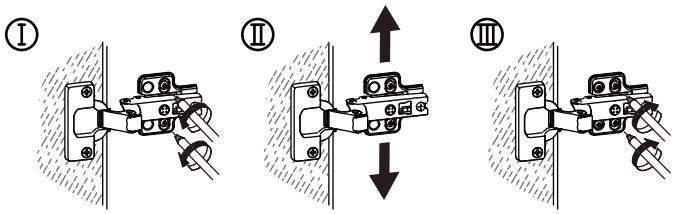

Loosen the height screws, then move the door up or down to make it level.
If the space between your doors is off...

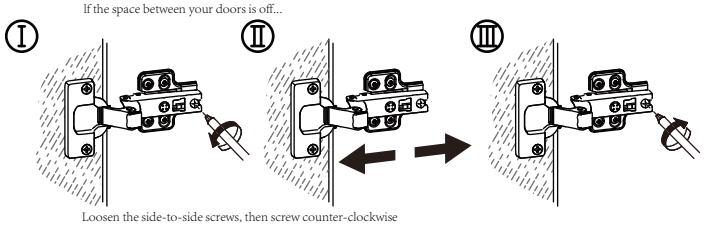

Loosen the side-to-side screws, then screw counter-clockwise to make the gap wider or clockwise to close any gaps.
If you need to adjust the depth of the doors...

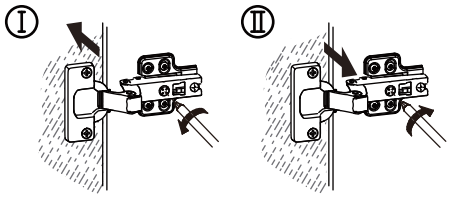

Adjust the in-and-out screws until the door is aligned with the side of the cabinet.

How to adjust lotus leaves

- (T) x16 m4x14mm

STEP 35

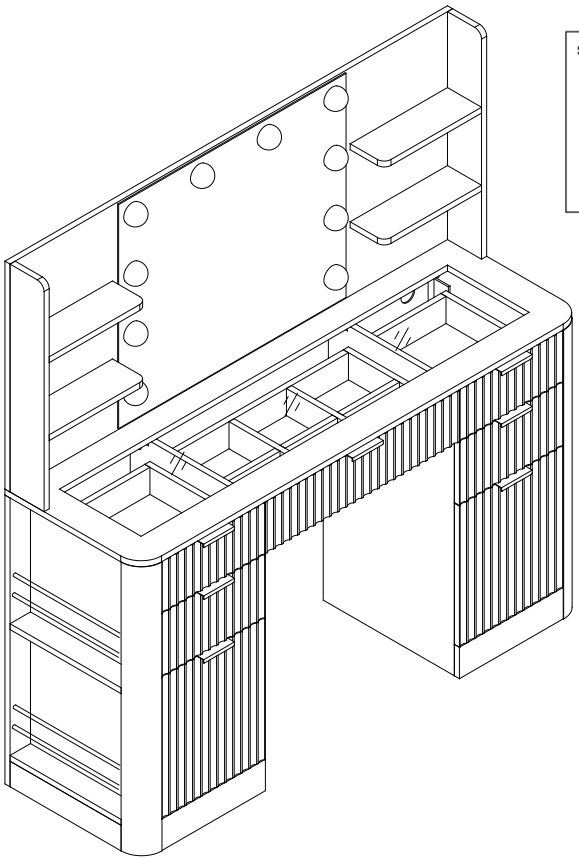

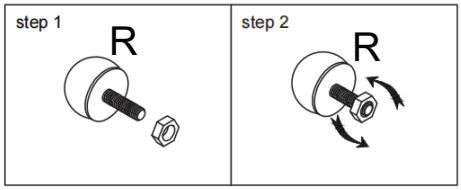

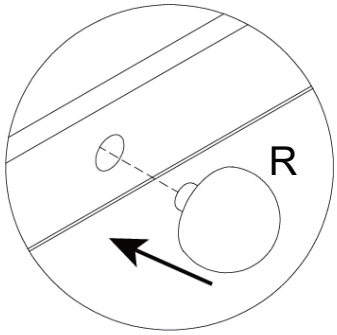

STEP 36

The loose lamp bulb connection wires are secured with self-adhesive tape to prevent the wires from extending beyond the product edges and affecting its appearance.

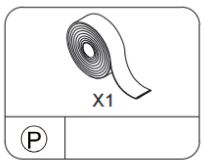

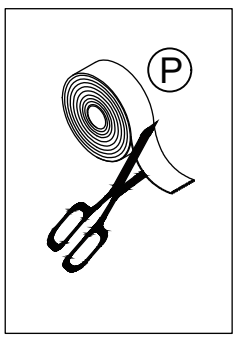

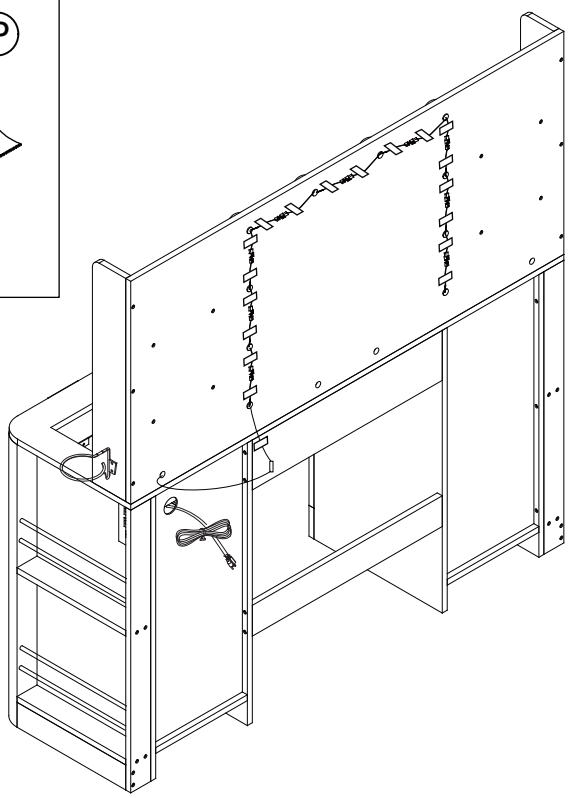

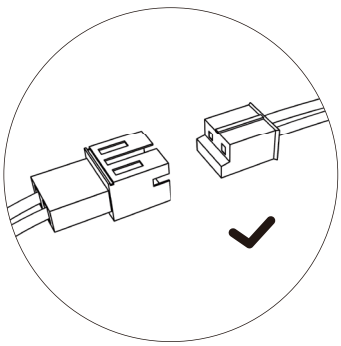

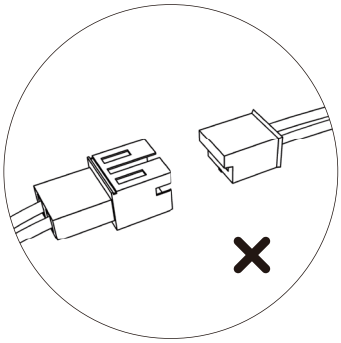

STEP 37

Conne ction method of light wires

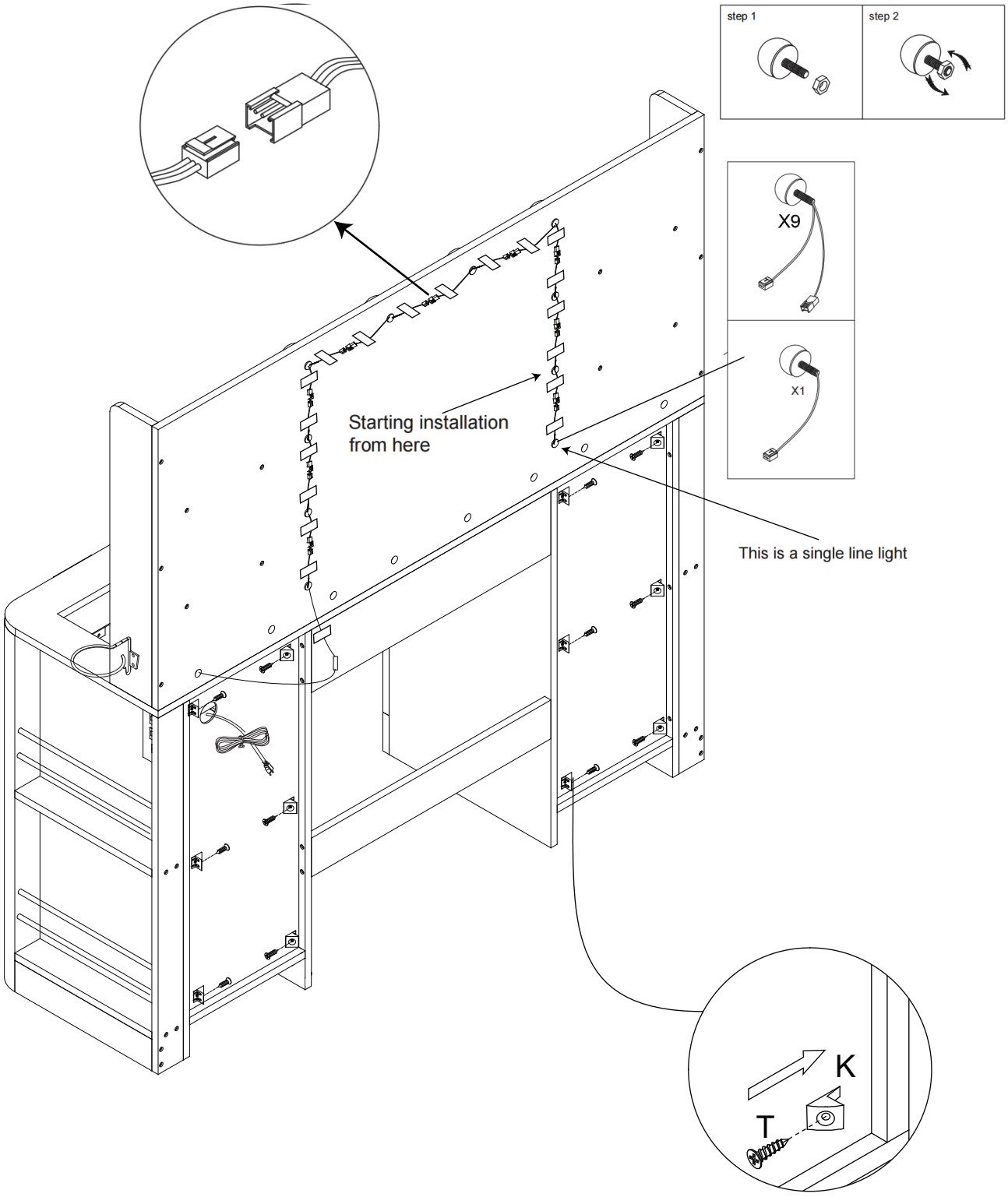

Tx12 m4x14mm

Kx12

STEP 38

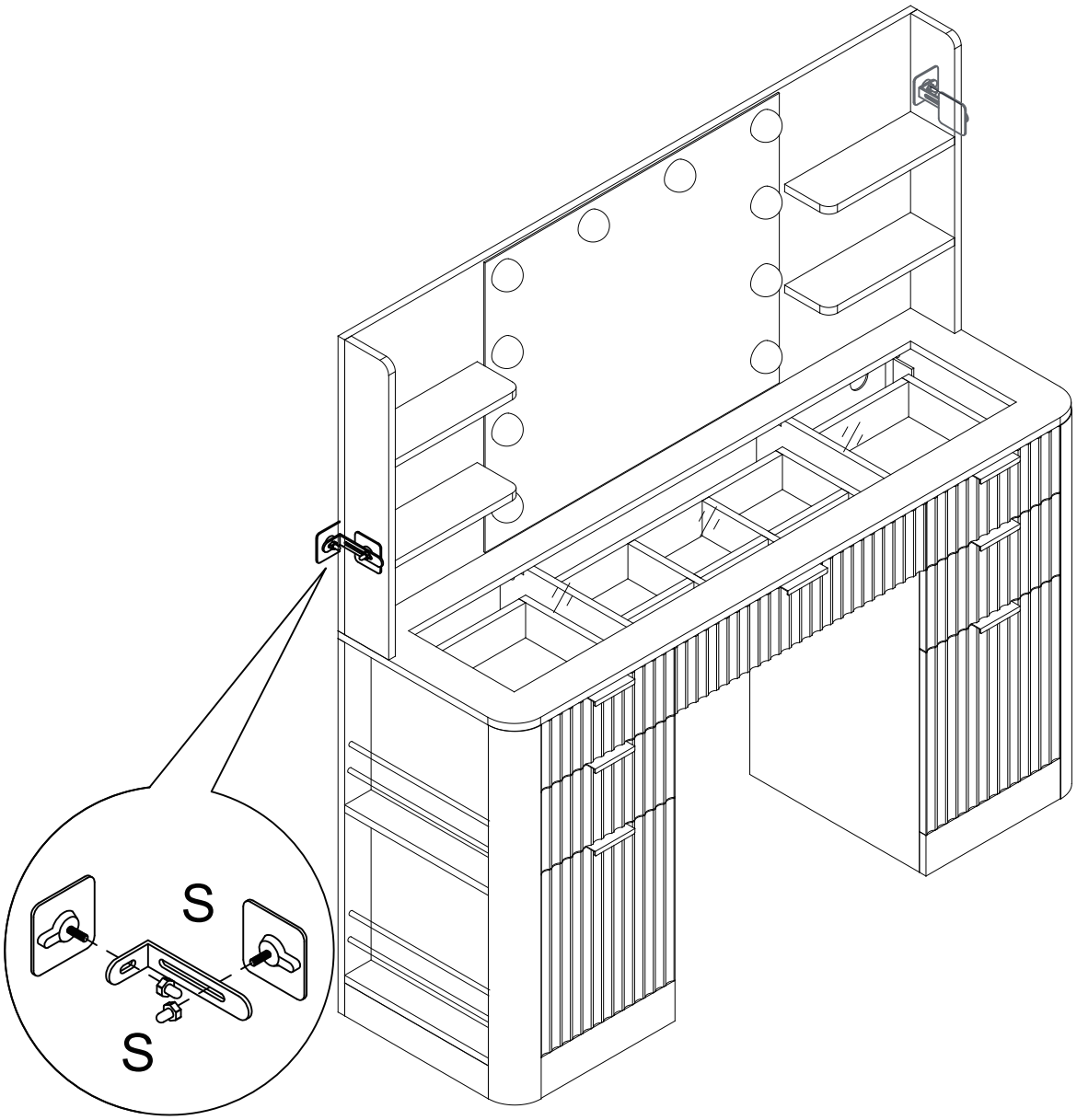

Ⓢx2 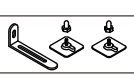

STEP 39

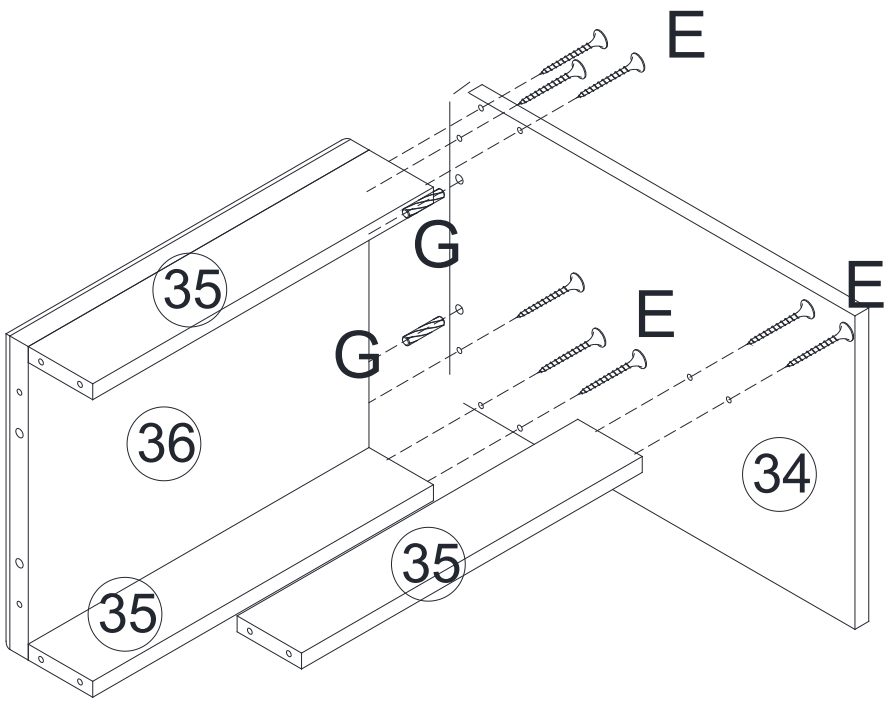

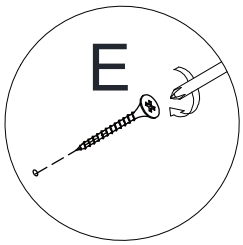

- (G) x2 — m6x30mm
- (E) x8 — m5x45mm

STEP 40

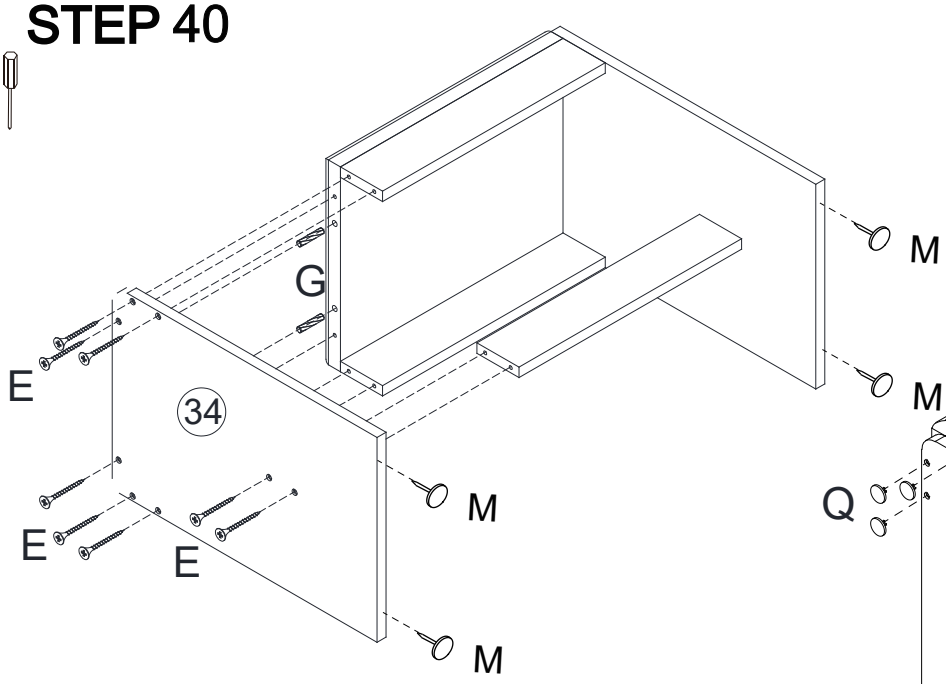

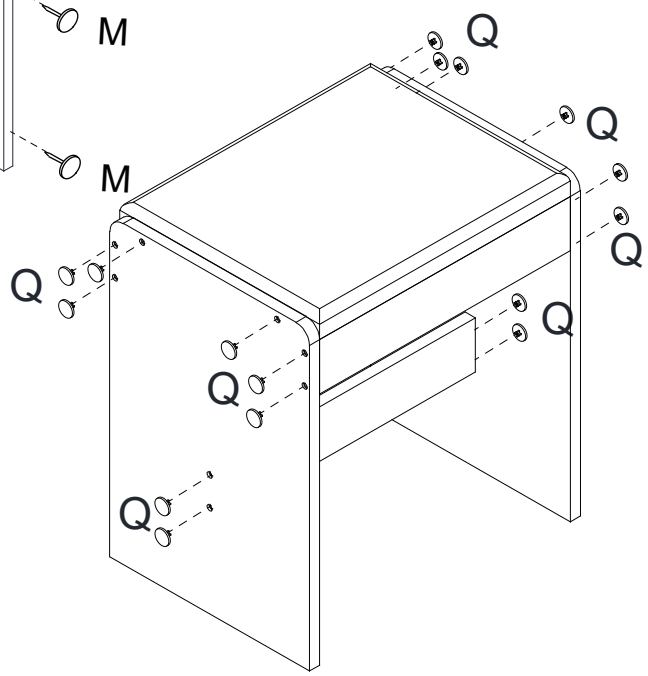

- (M) x4
- (Q) x16
- (G) x2 — m6x30mm
- (E) x8 — m5x45mm