ASSEMBLY INSTRUCTIONS

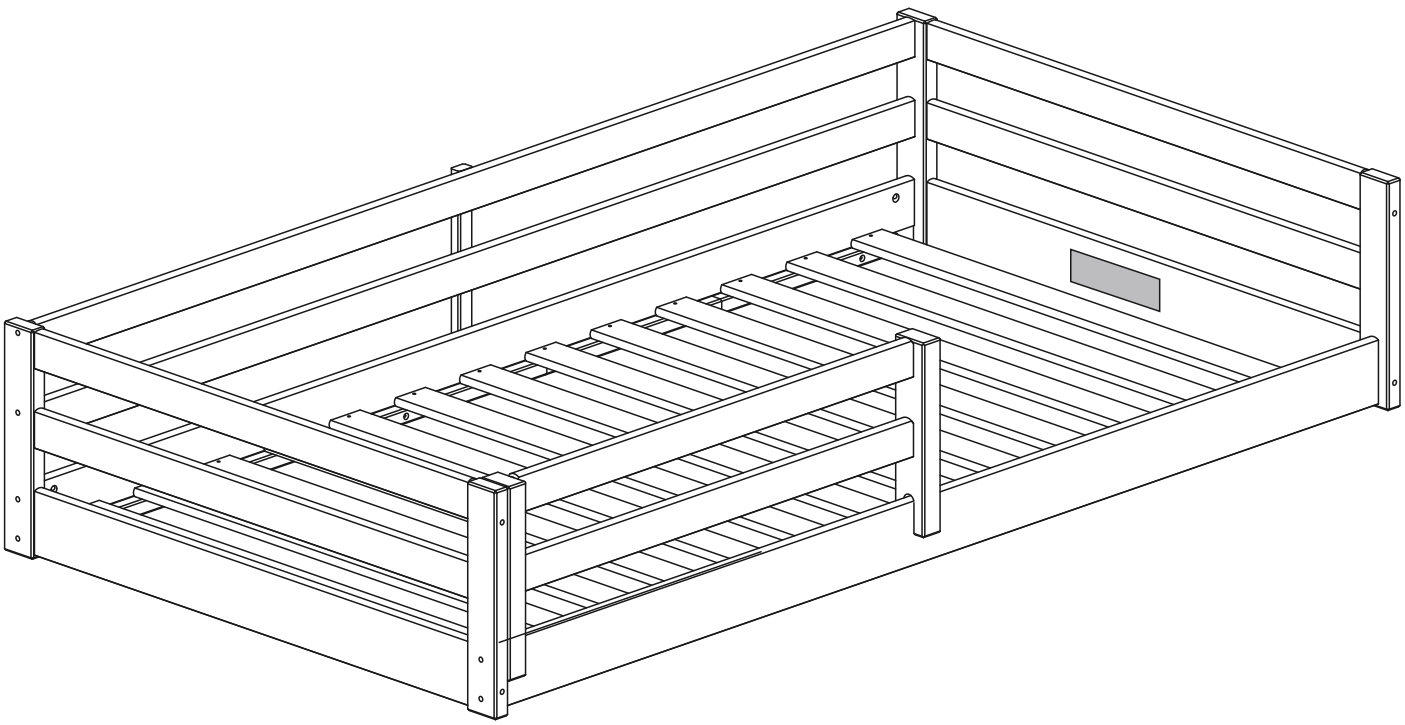

⚠ **Hardware is inside a cardboard box. Please check for it before disposing of the packaging.**

Thank you for your purchase.

Damaged or missing part? Please do not return this product.

[redacted]

REV 11/26

ASSEMBLY INSTRUCTIONS

SAFETY WARNINGS!

· Failure to follow these warnings and the assembly instructions could result in serious injury or death.

· Read all instructions before assembling. Keep instructions for future use.

· Upon completion of assembly, make sure all screws, bolts and fasteners have been securely tightened.

· A frequent and periodically check should be made to confirm all the screws and nuts remain tight.

· Never use this product if there are any loose, missing fasteners, loose joints, broken parts, or torn mesh/fabric.

Contact us for replacement parts and instructional literature if needed.

· Never substitute parts, the product including side rails, must be fully erected prior to use.

· Never use plastic shipping bag or other plastic film as a mattress covers not sold and intended for that purpose, they can cause suffocation.

· Caution entrapment hazard: to avoid dangerous gaps, any mattress used in this bed shall be **74** 5/8 in (**1900** mm) in length, **37 3/4** in (**960** mm) in width and 5 in (127m) in thickness, or greater, but not exceed 6 in. (150mm).

· Never use a water mattress with this bed.

· **Warning** strangulation hazard: strings can cause strangulation!

Never place bed near window where cords from blinds or drapes may strangle a child. Never suspend strings over bed.

Never place items with a string cord, or ribbon, such as hood strings, pacifier cords around a chils's neck. Theses items may catch on bed parts.

· **Warning**: infants have died in toddler beds from entrapment. Openings in and between bed parts can entrap head and neck of a small child. Never use bed with children under 15 months. Always follow the assembly instructions.

· To reduce the risk of sids, pediastricians recommed healthy infants be placed on theire back to sleep, or advised by your physician.

· Do not use bed if the space between bed and solid objects is less than 12in(31cm), a child could slide into the space and suffocate.

· If refinishing, use a non-toxic finish specified for children's products. To wash, clean with mild soap and damp cloth. To store, please keep in a cool place.

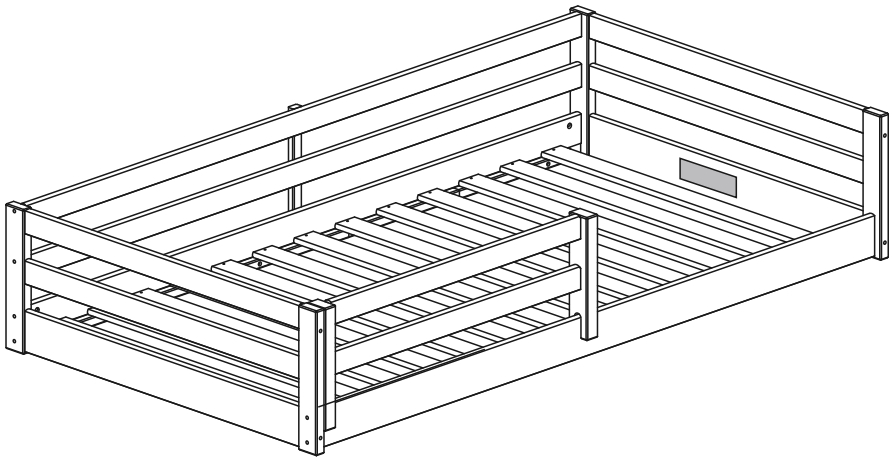



IMPORTANT: PLEASE READ INSTRUCTIONS BEFORE STARTING THE ASSEMBLY

Part	Description	Dimensions (in)	Qty.
01	Right foot	14,68 x 2,48	01
02	Left foot	14,68 x 2,48	01
03	Right foot	14,68 x 2,48	01
04	Left foot	14,68 x 2,48	01
09	Support	12,99 x 1,18	01
15	Side rails	74,80 x 4,33	02
16	Large rail	36,93 x 4,33	01
17	Large rail	36,93 x 4,33	01
18	Rail	36,93 x 2,56	02
19	Rail	36,93 x 2,56	02
20	Rail	74,80 x 2,56	01
21	Rail	74,80 x 2,56	01
22	Rail	33,74 x 2,56	02
23	Slats	38,58 x 2,76	13
85	Support	12,48 x 2,48	01
86	Support	12,48 x 2,48	01

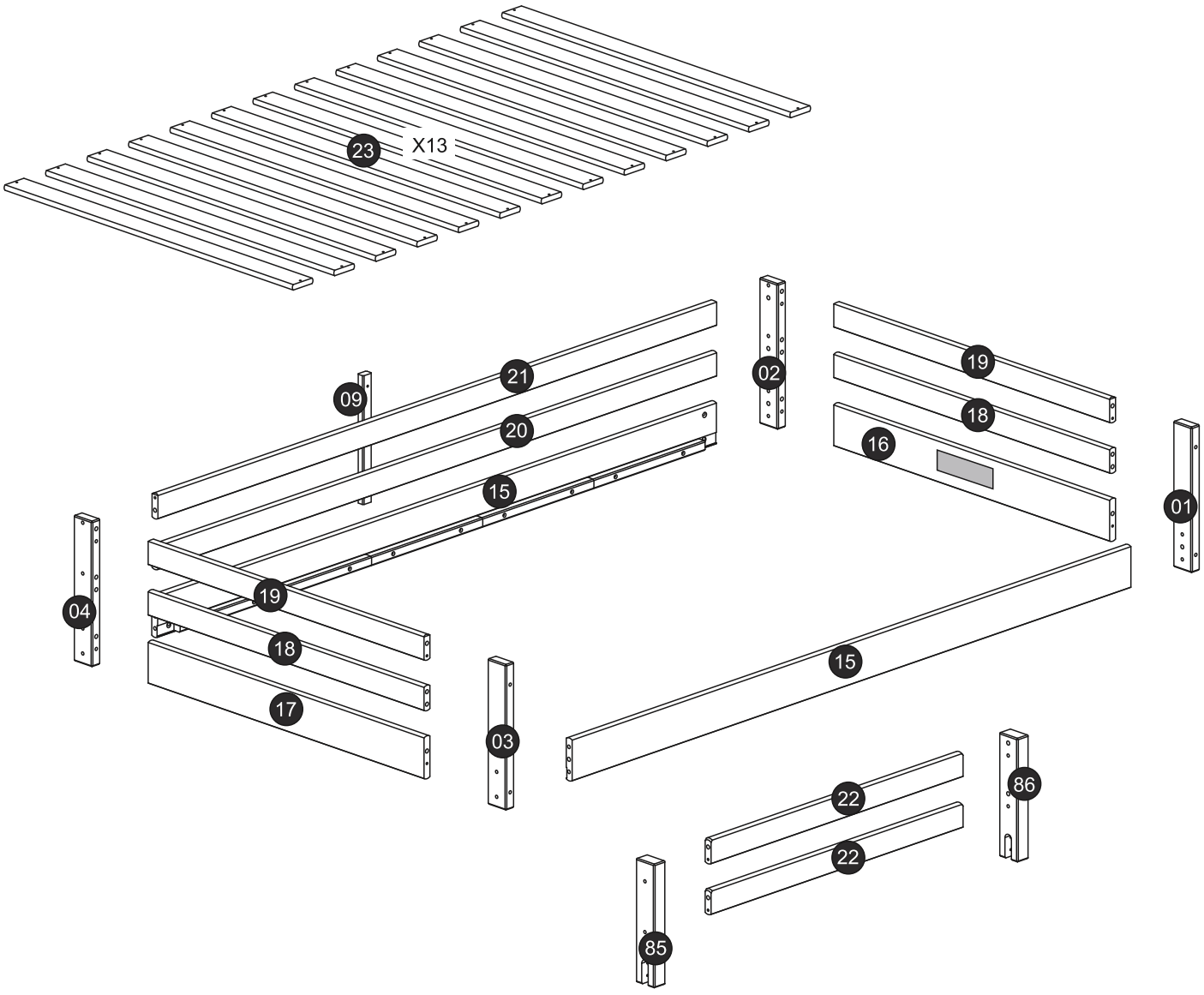

Before you start

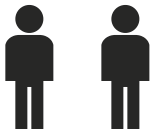

2 People

Assemble this product with the help of a second person.

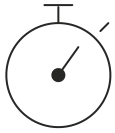

120 Min

Estimated assembly time.

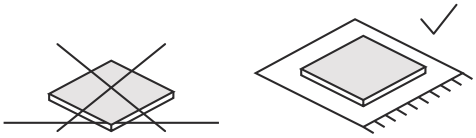

Protect the parts

Do not assemble on a hard floor. Use a rug or a soft, clean surface.

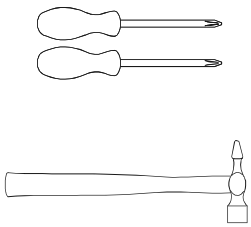

Tools required

Phillips screwdriver
Hammer

A	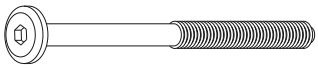 1/4 X 80 X 17mm Bolt	08
B	 1/4 Nut	08
C	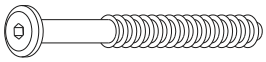 Ø7 X 80 X 17mm Bolt	04
D	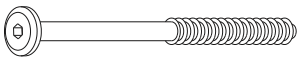 Ø7 X 100 X 17mm Bolt	08
E	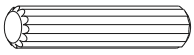 Ø10 X 40mm Wooden dowel	28

F	 Ø4,0 X 35mm Screw	33
G	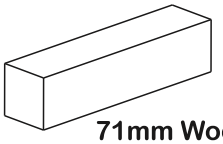 71mm Wood Block	02
H	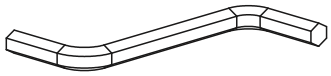 ALLEN KEY	01
J	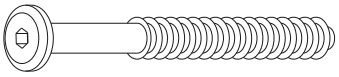 Ø7 X 70 X 17mm Bolt	04

HARDWARE IS LOCATED INSIDE A CARDBOARD BOX! CHECK FOR IT BEFORE DISPOSING PACKAGING

Ruler - Use this ruler to help correctly identify the screws

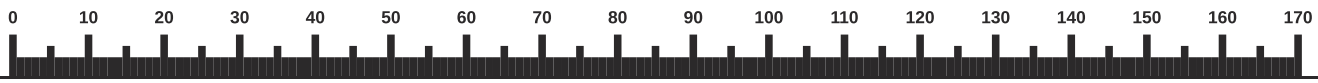

01

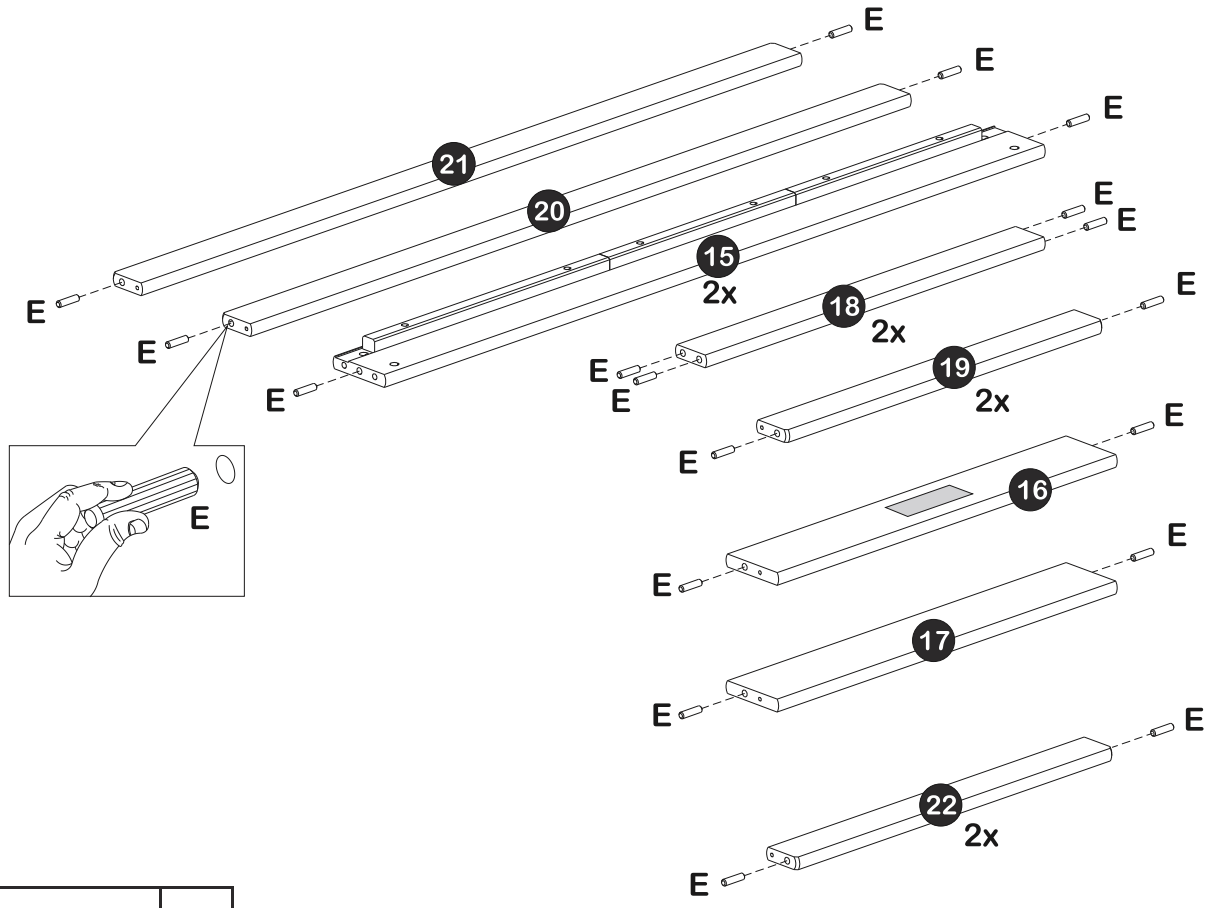

E		28

02

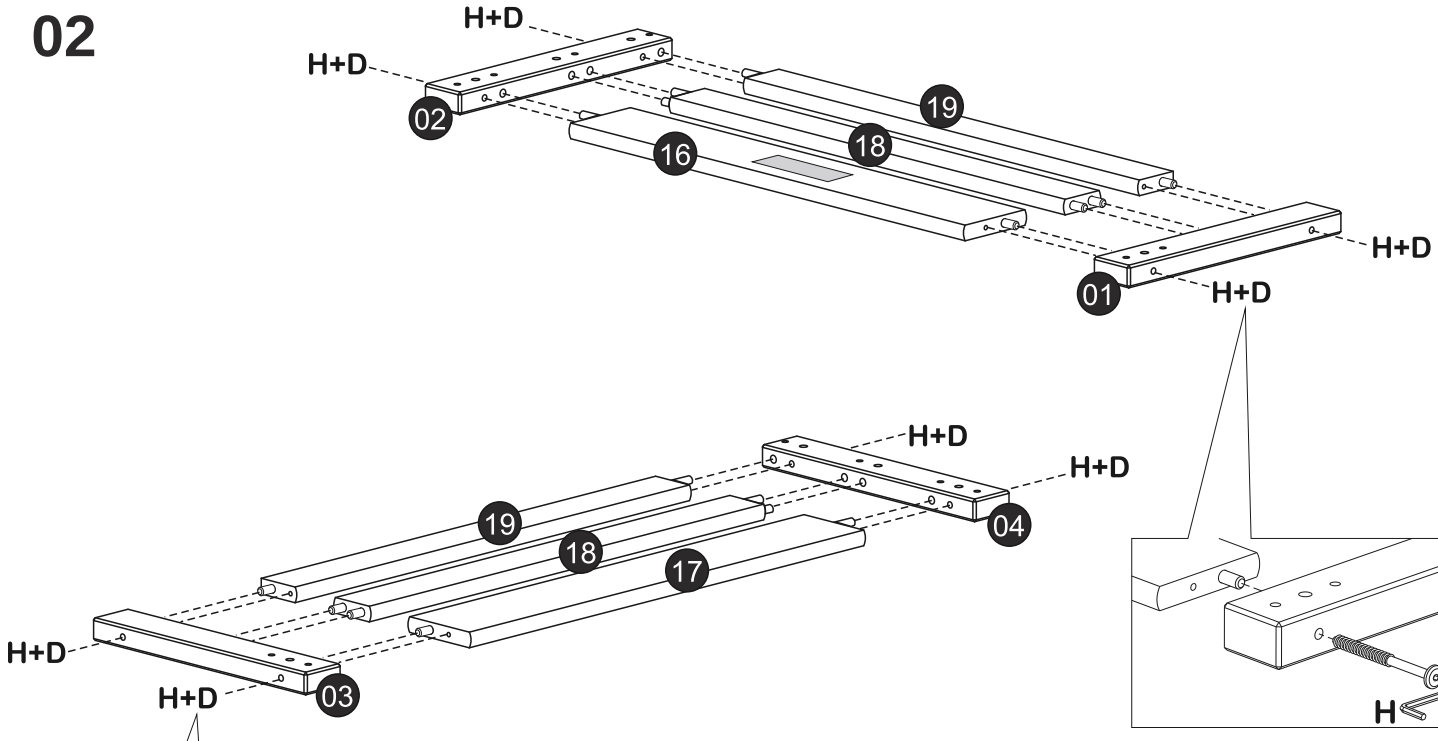

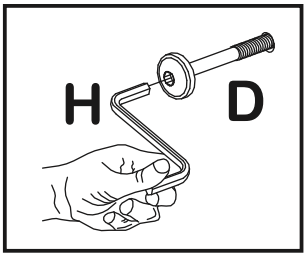

D	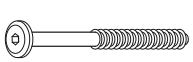	12
H	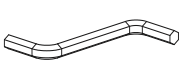	1

03

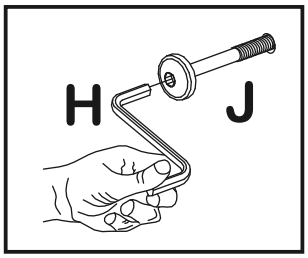

A		08
B		08
J		04
H		01

04

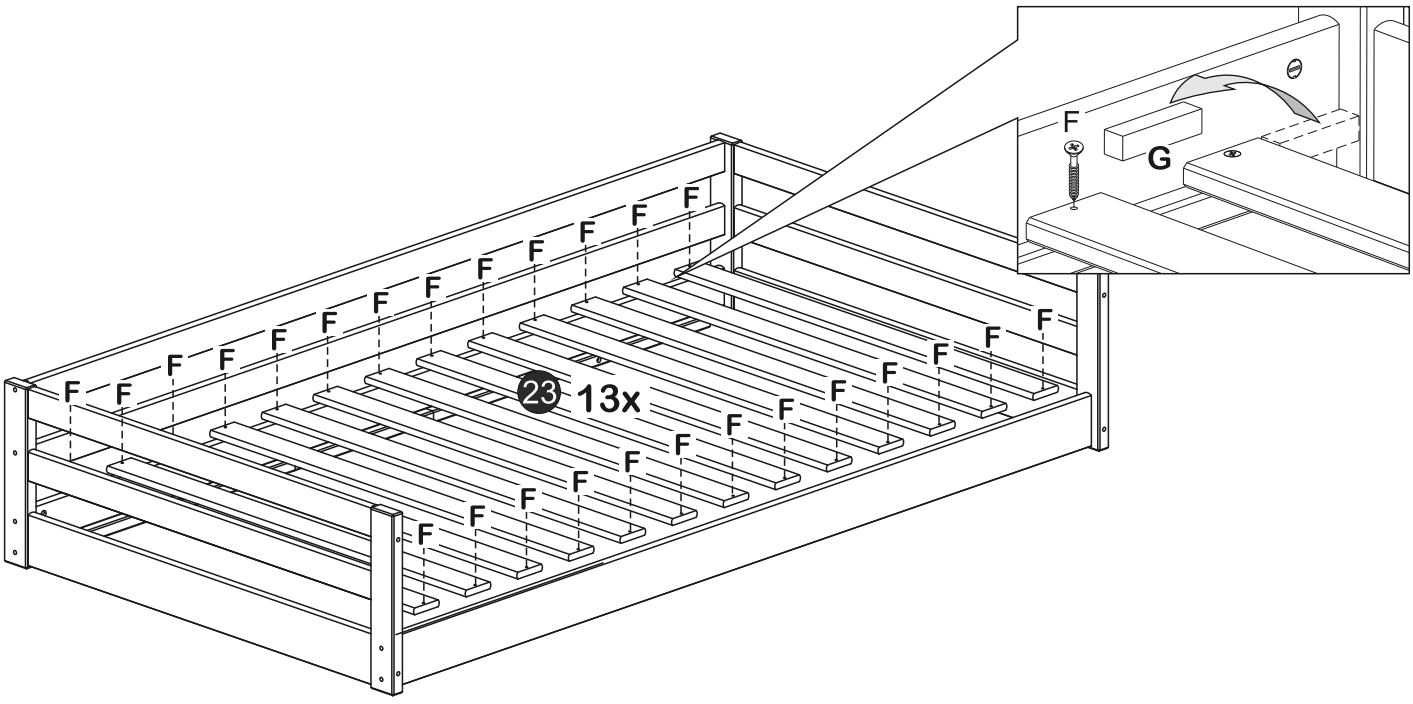

F		26	G		02

05

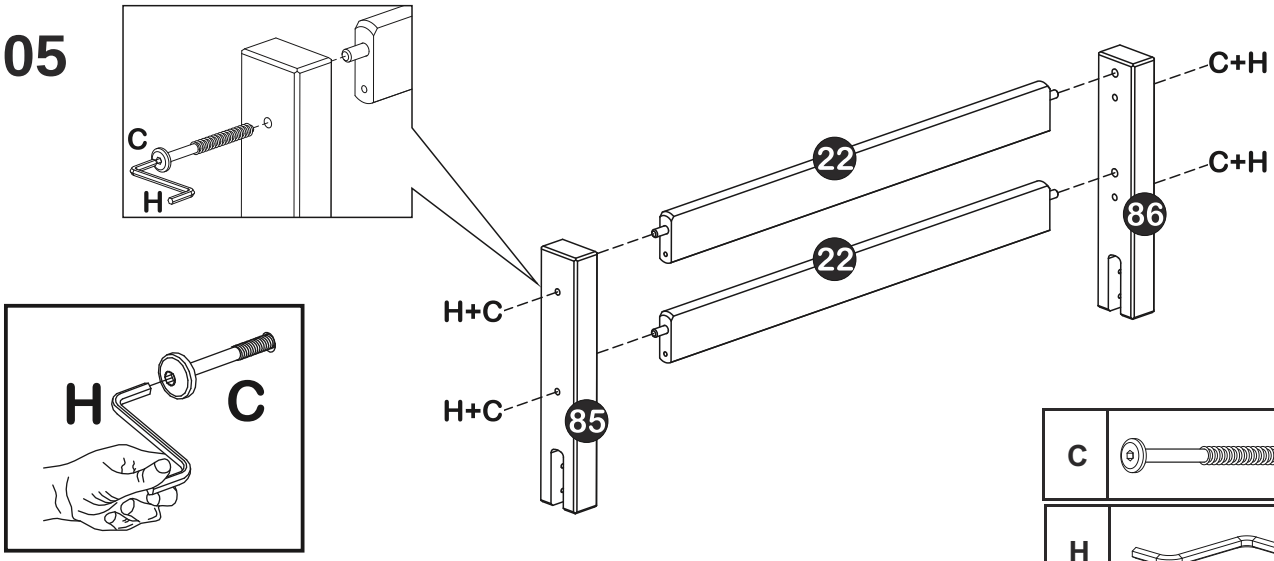

C		04
H		01

06

Option 01

Option 02

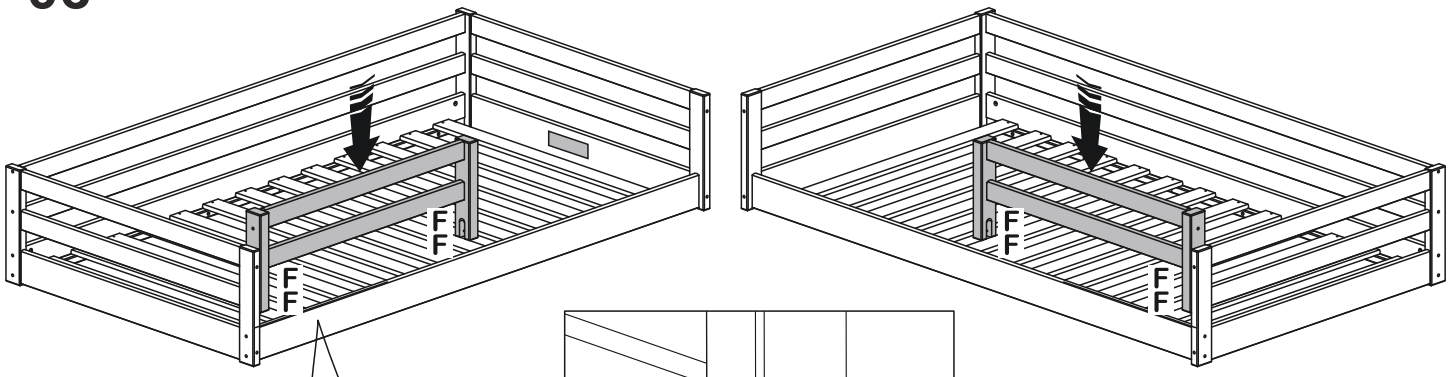

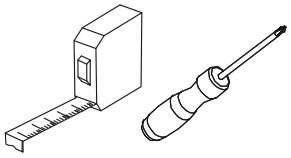

F		04

07

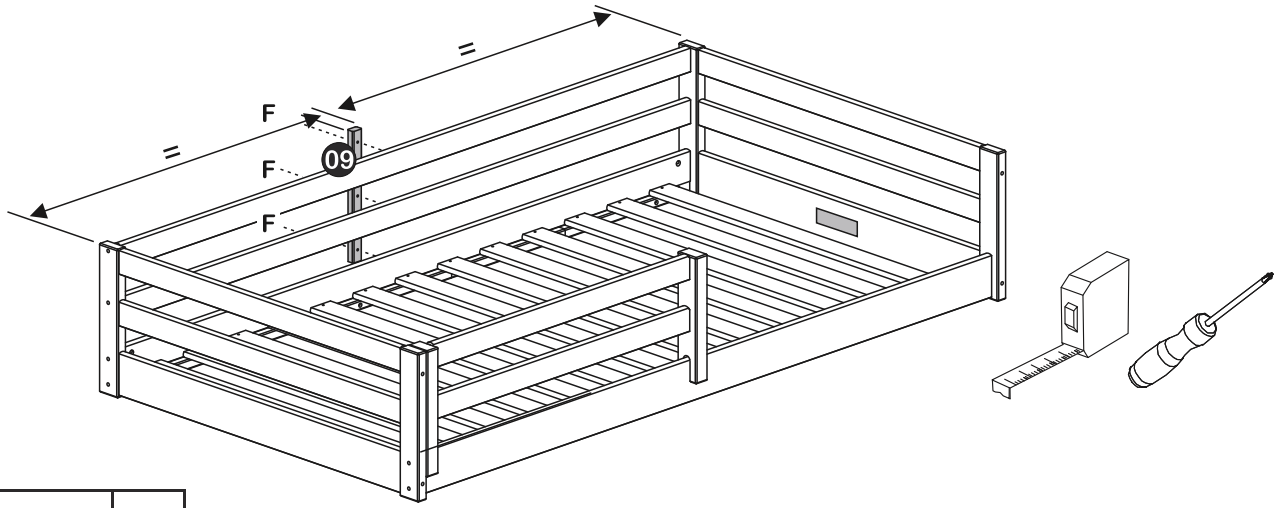

F	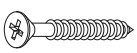	03