48*80" Bypass 5 Panel Sliding Closet Door Installation Manual

MYCD5P-T48+HD

Any question please contact us:
support@jubest.com

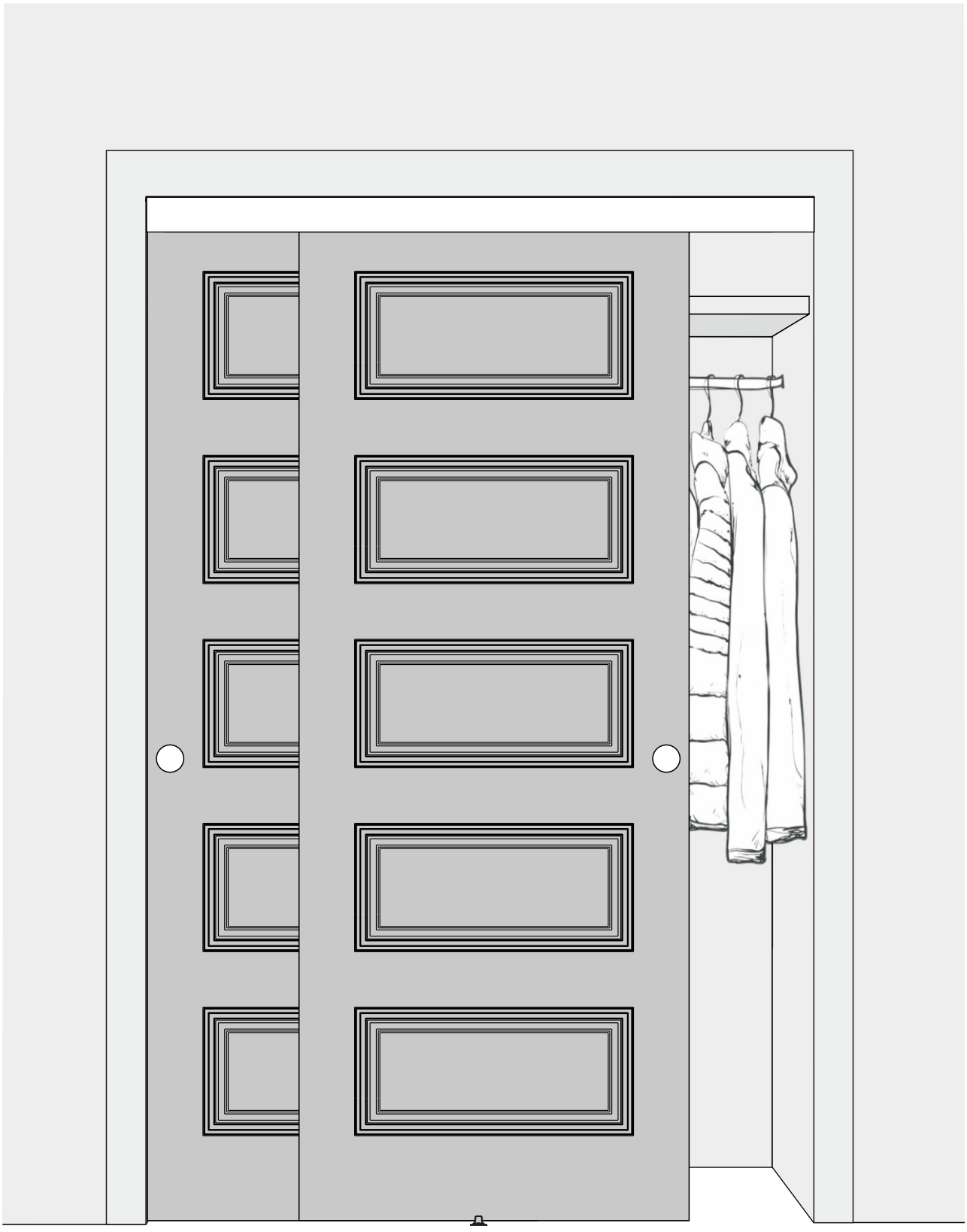

TOOLS REQUIRED

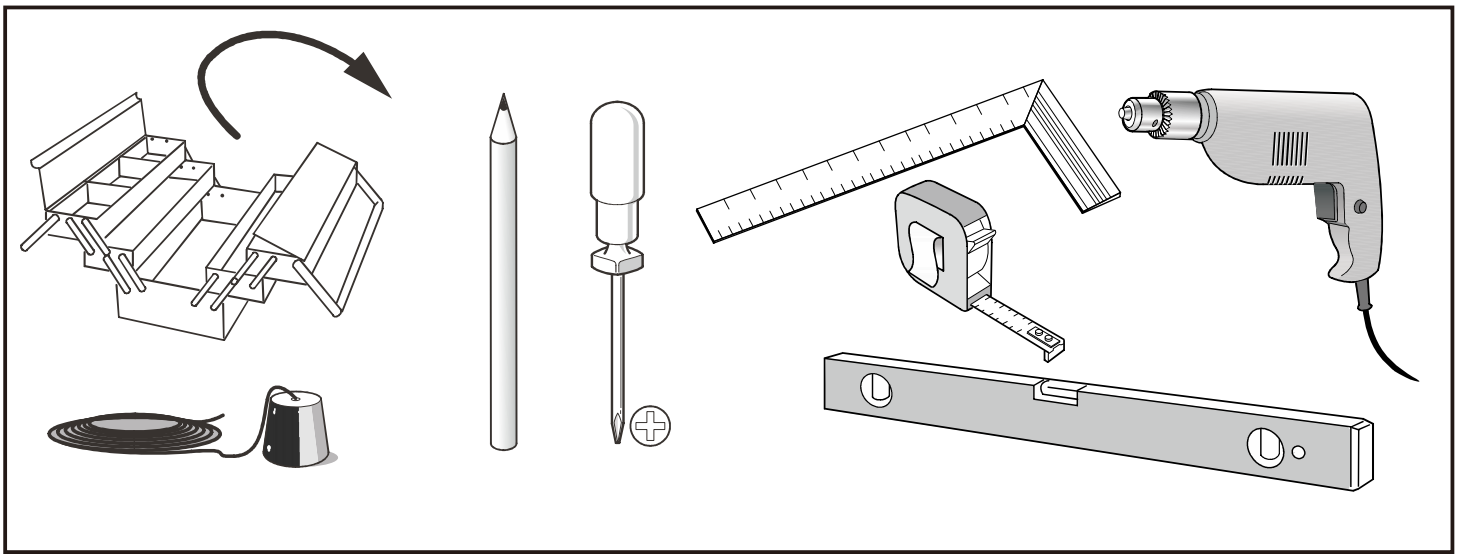

WHAT IS IN THE BOX

A

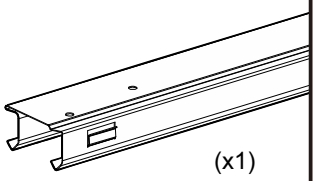

(x1)



(x9)
#8x1-1/4"
(ST4.2mmx32mm)

B

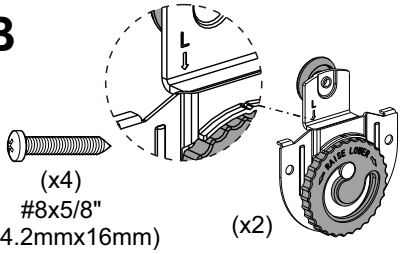

(x4)
#8x5/8"
(ST4.2mmx16mm)

(x2)

C

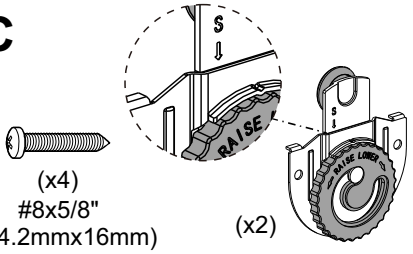

(x4)
#8x5/8"
(ST4.2mmx16mm)

(x2)

D

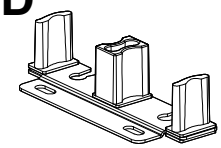

(x1)

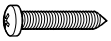

(x2)
#8x3/4"
(ST4.2mmx19mm)

E

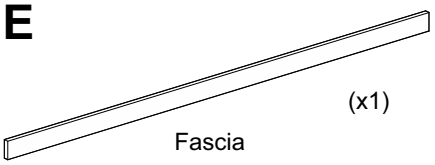

(x1)
Fascia

F

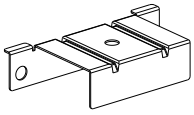

(x3)



(x6)
#7x3/8"
(ST3.9mmx9.5mm)

G

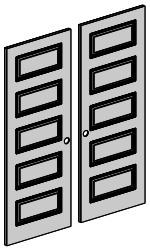

(x1)

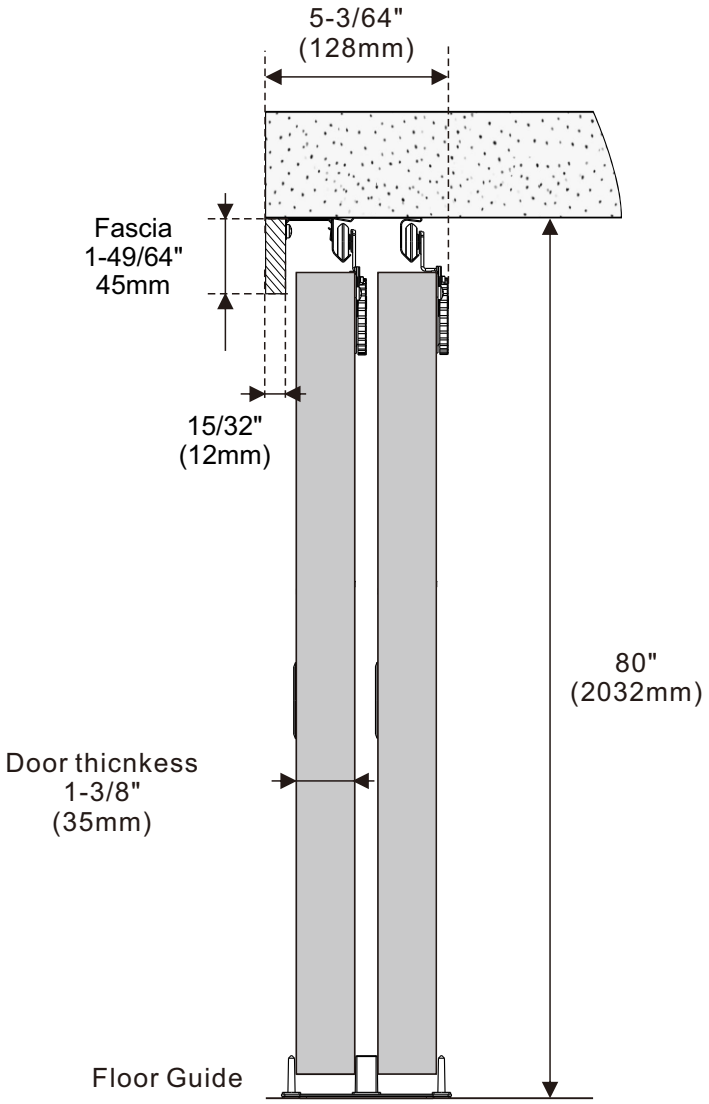

INSTALLTAION INSTRUCTIONS

1 **INSTALL FASCIA (E)**

Mark locations on the fascia with pencil

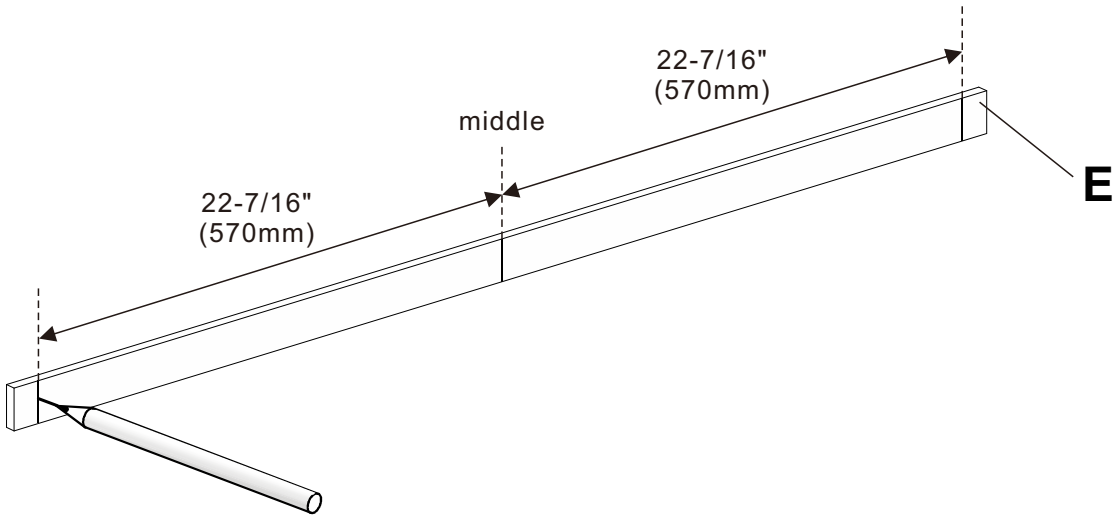

2 MOUNT CONNECTORS (F) ONTO FASCIA (E)

Attach 3 connectors to fascia is and
use screws to fasten them.

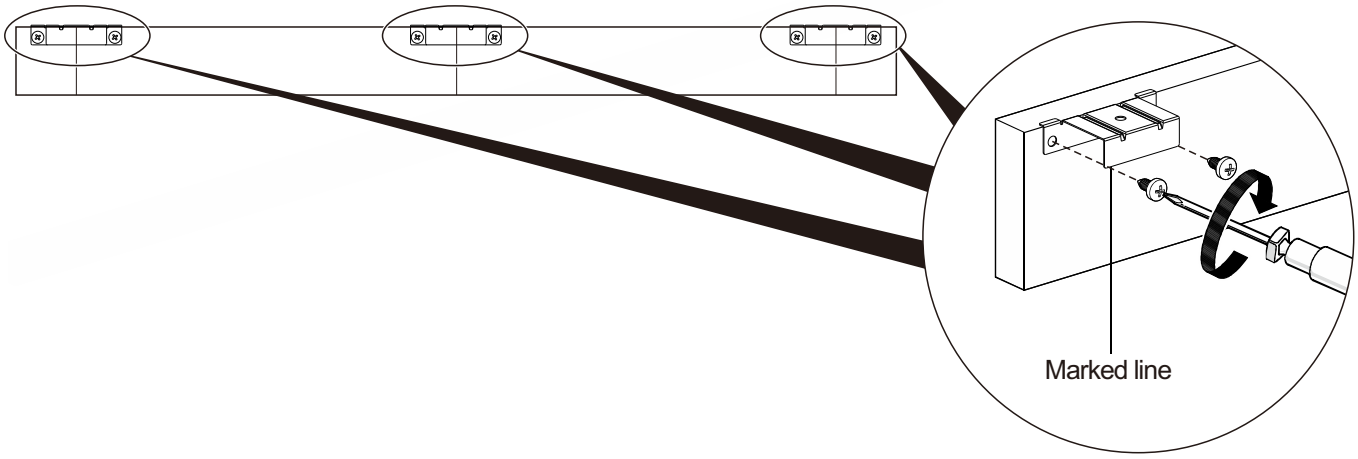

3 INSTALL FASCIA (E) ONTO TRACK (A)

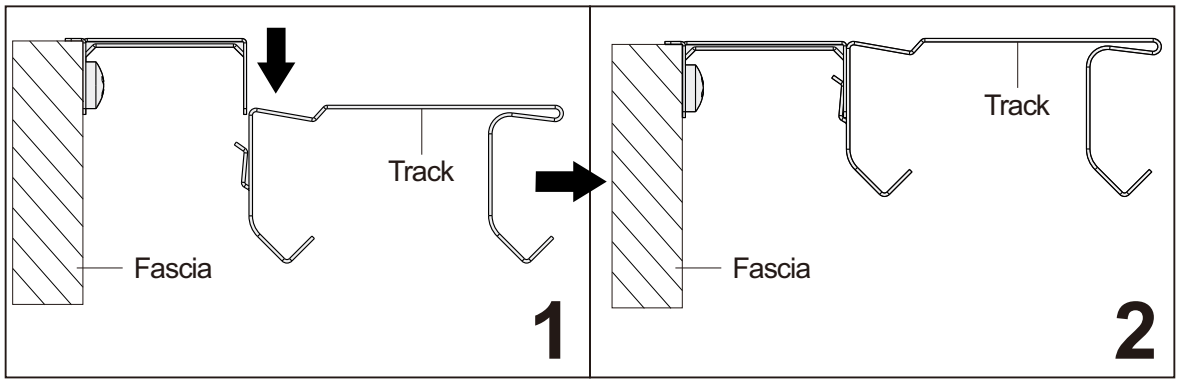

4 INSTALL TRACK

Place track on door header,centered between both door jambs.Make sure track openings are facing inside of closet.Position fascia flush with door opening.With track as template,mark location of screwholes.Drill 3/32"(2.4mm) pilot holes to approximate screw length.Using supplied #8x1-1/4"(ST4.2mmx32mm)screws,securely attach track to header.

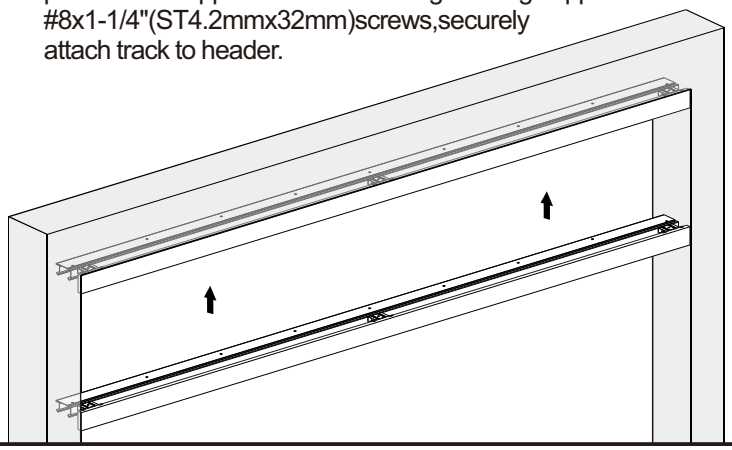

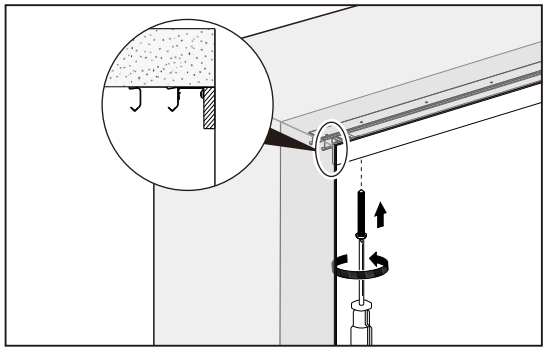

5

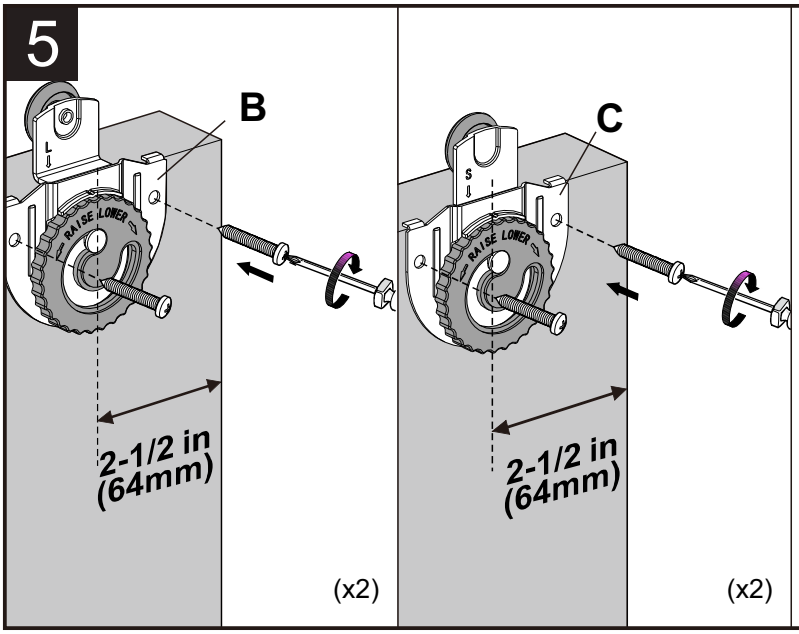

ATTACH DOOR HANGERS (B/C)

Fasten hangers to top/back of door panel,using supplied #8x5/8" (ST4.2mmx16mm)screws.Dial Adjust Hangers must be 2-1/2"(64mm)from edge of door.Using hanger as template,mark screwhole locations.Drill a 3/32"(2.4mm) pilot hole to approximate screw length.Securely attach hangers with supplied screws.

⚠ Note: Install the same type of hanger on the door.

6

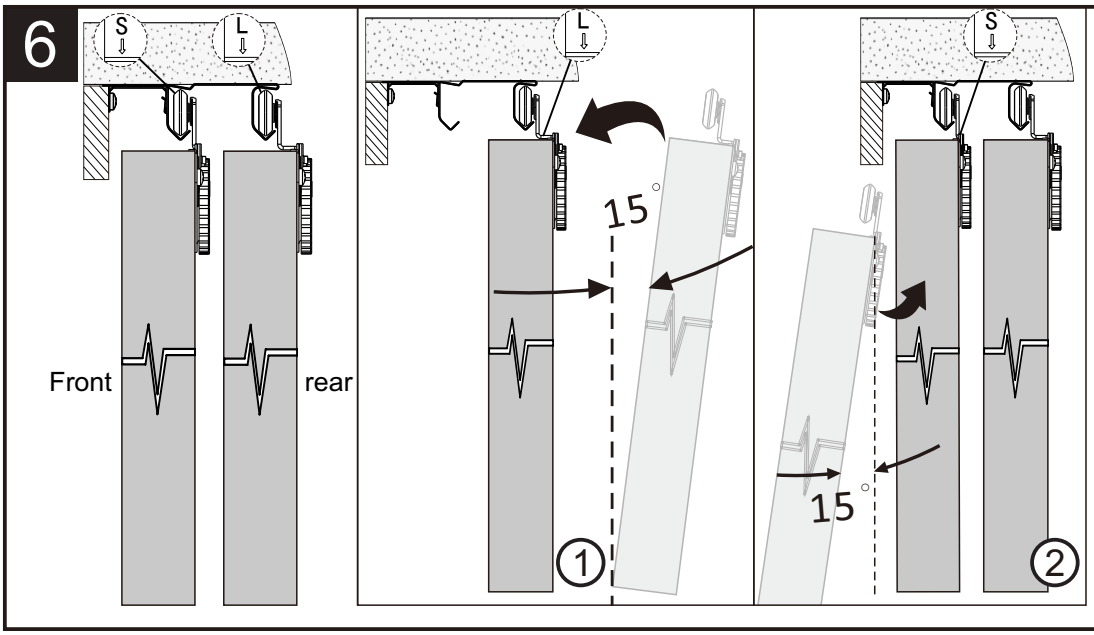

INSTALL 2 DOOR SLABS(G)

Hang doors on track,Start with inside (or rear)door first.Door must be positioned at an angle of approximately 15 degrees to engage track.Doors require the installation of panel with L hanger first.

7

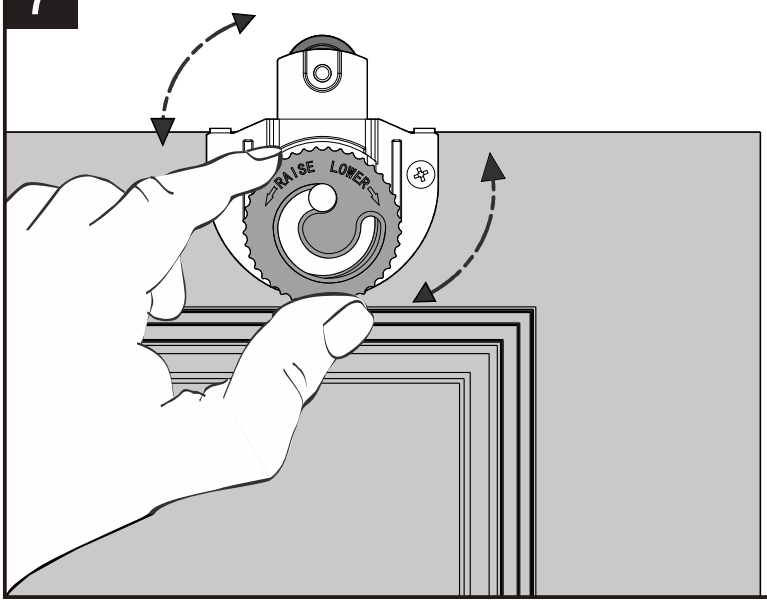

DOOR ADJUSTMENT

Align doors with frame by lifting one side of door, removing weight from hanger.Turn dial until doors are vertically aligned with frame.Release door so that it returns to original position.

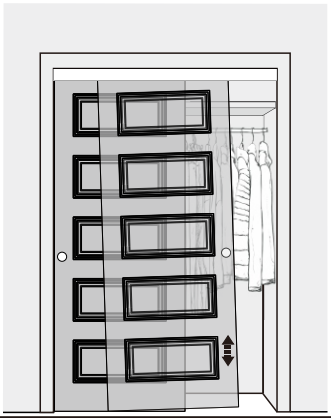

8

INSTALL DOOR GUIDE (D)

Push the two door slabs to the same side against the wall.

Position the guide beneath overlap of doors,as shown.

Adjust the two door slabs so that they are vertical.

Using supplied #8x3/4"(ST4.2mmx19mm) screws, securely fasten guide to floor.

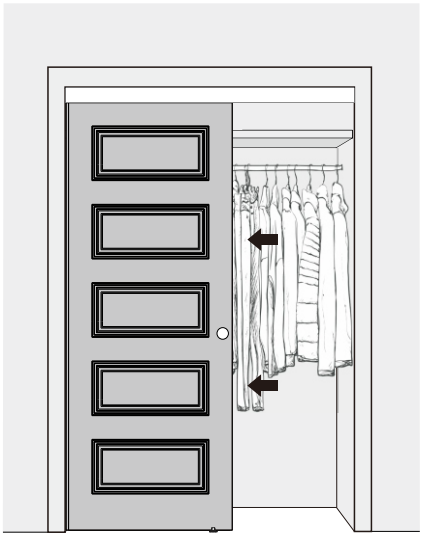

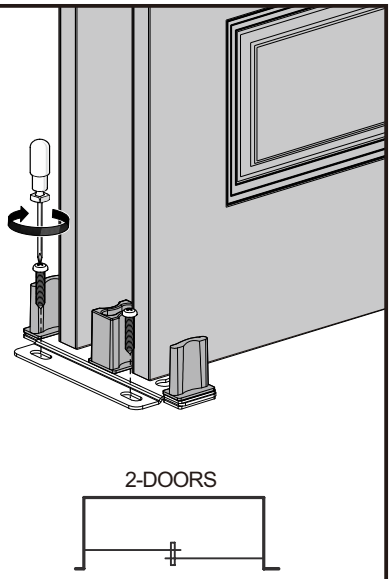

(Default for 1-3/8"(35mm) thick door)