Installation & Assembly

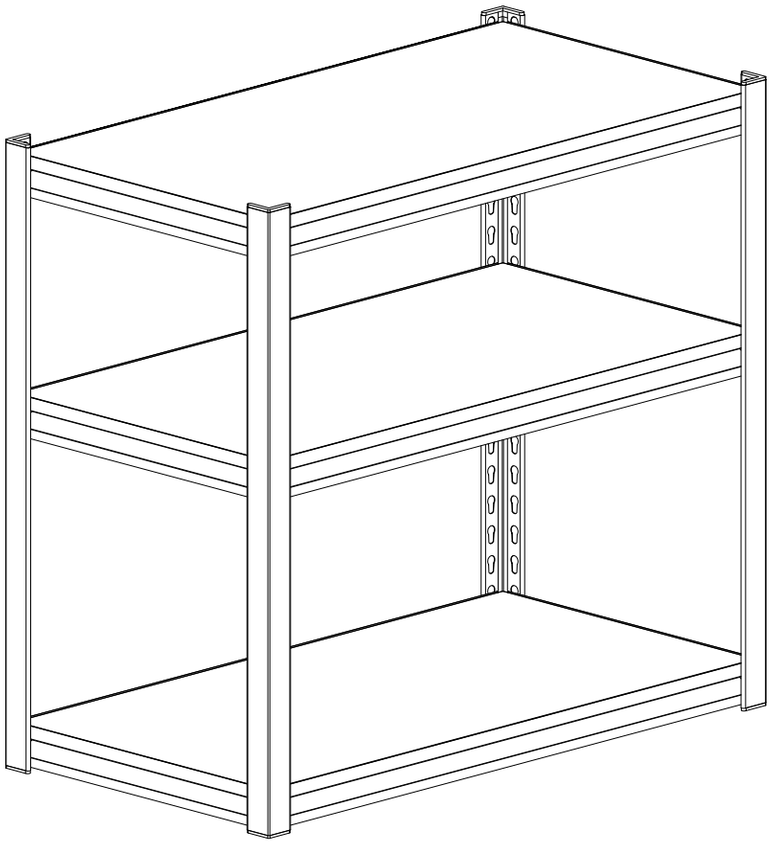

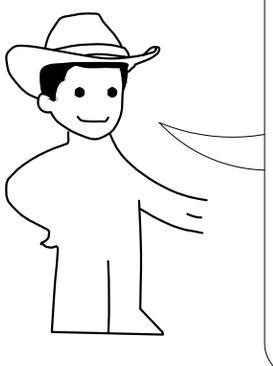

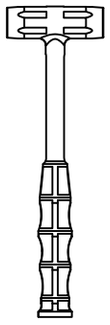

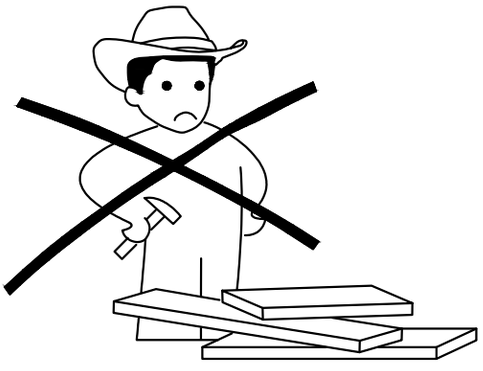

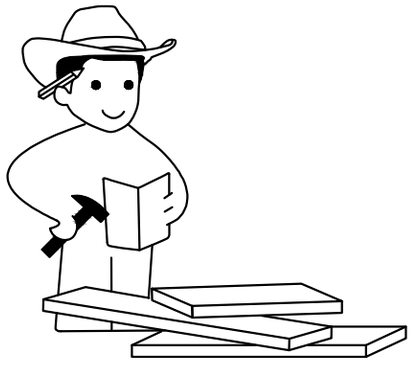

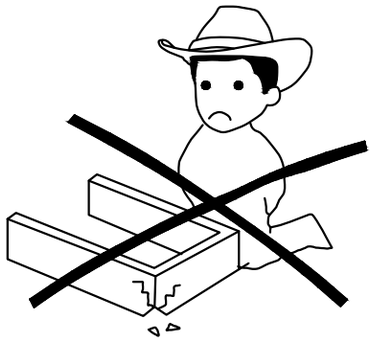

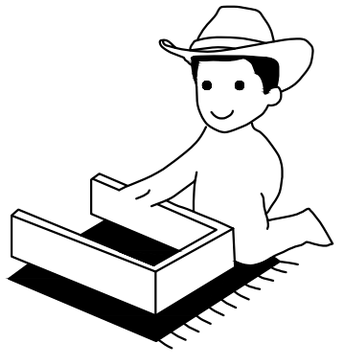

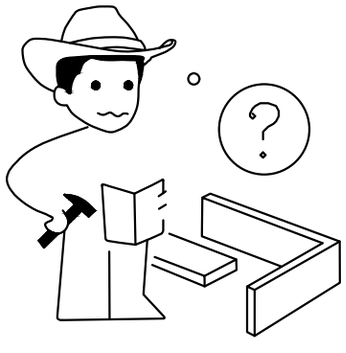
?

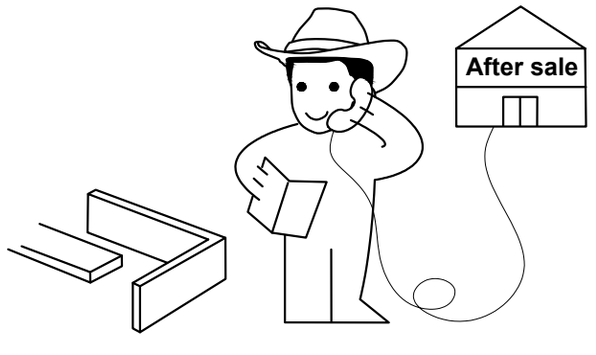
After sale

1×6pcs

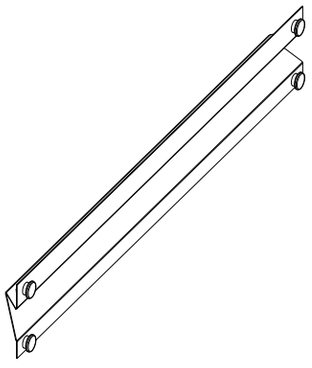

2×6pcs

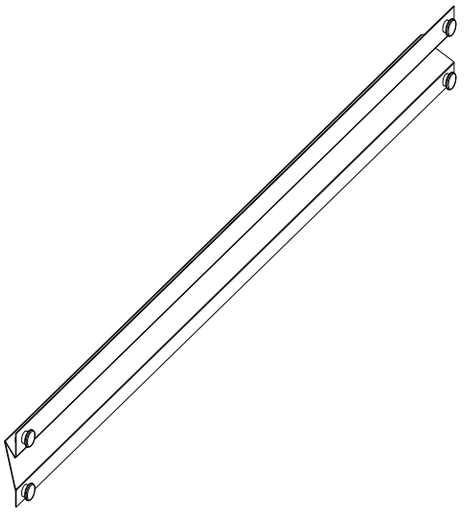

3×3pcs

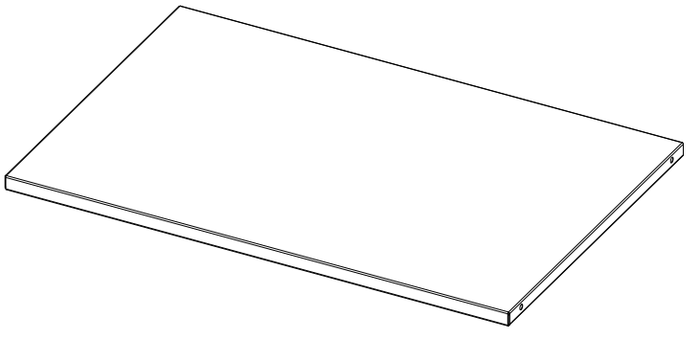

4×4pcs

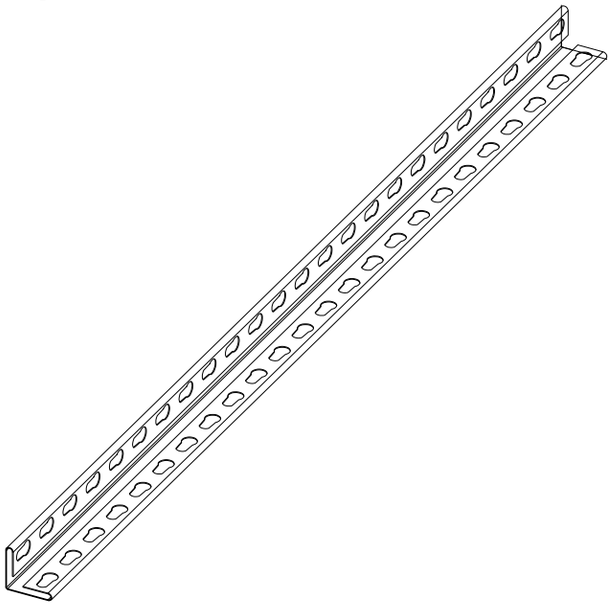

A×8pcs

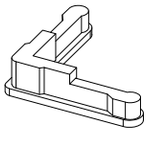

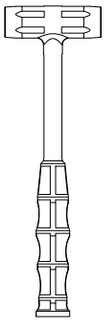



1

Note that the hoist hole in part #4 has the large opening facing up and the small opening facing down.

Using a small hammer, tap the flat side of part #1 (flat side up) so that the circular slot in part #1 is completely inside the hoist hole in part #4 (as shown)

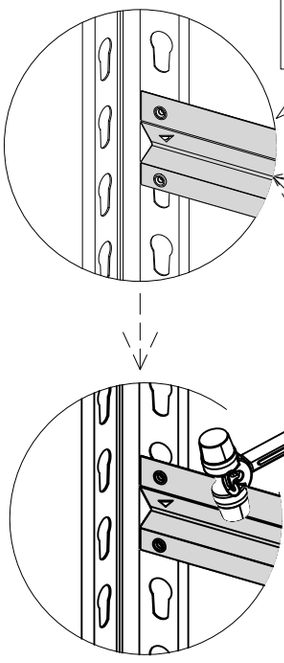

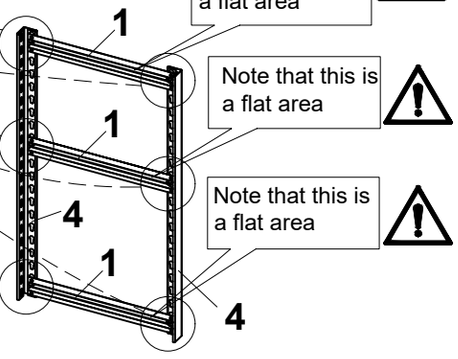

As with the left side, two side panels are required.

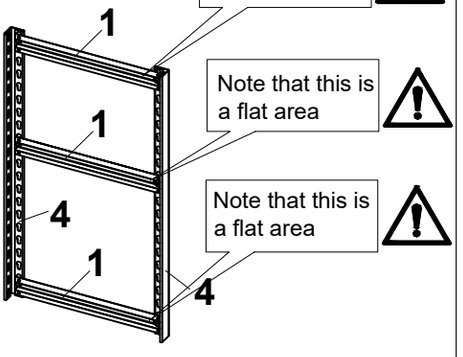

This product supports customized spacing between each spacer. It is recommended that Attachment 1 be installed at the lowest, middle, and top of Attachment 4 during installation.

2

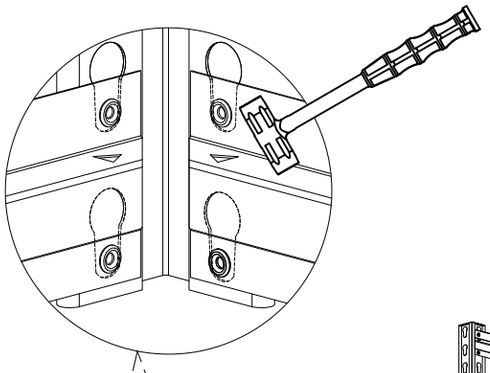

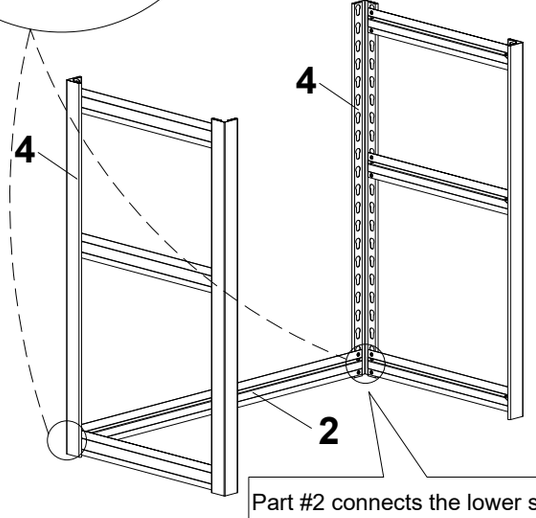

Part #2 connects the lower side frames (same way it connects the others)

Install 5x part #2 in the same manner

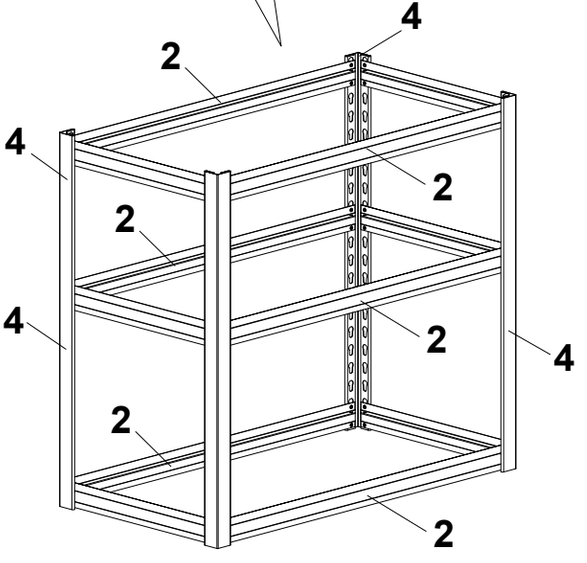

3

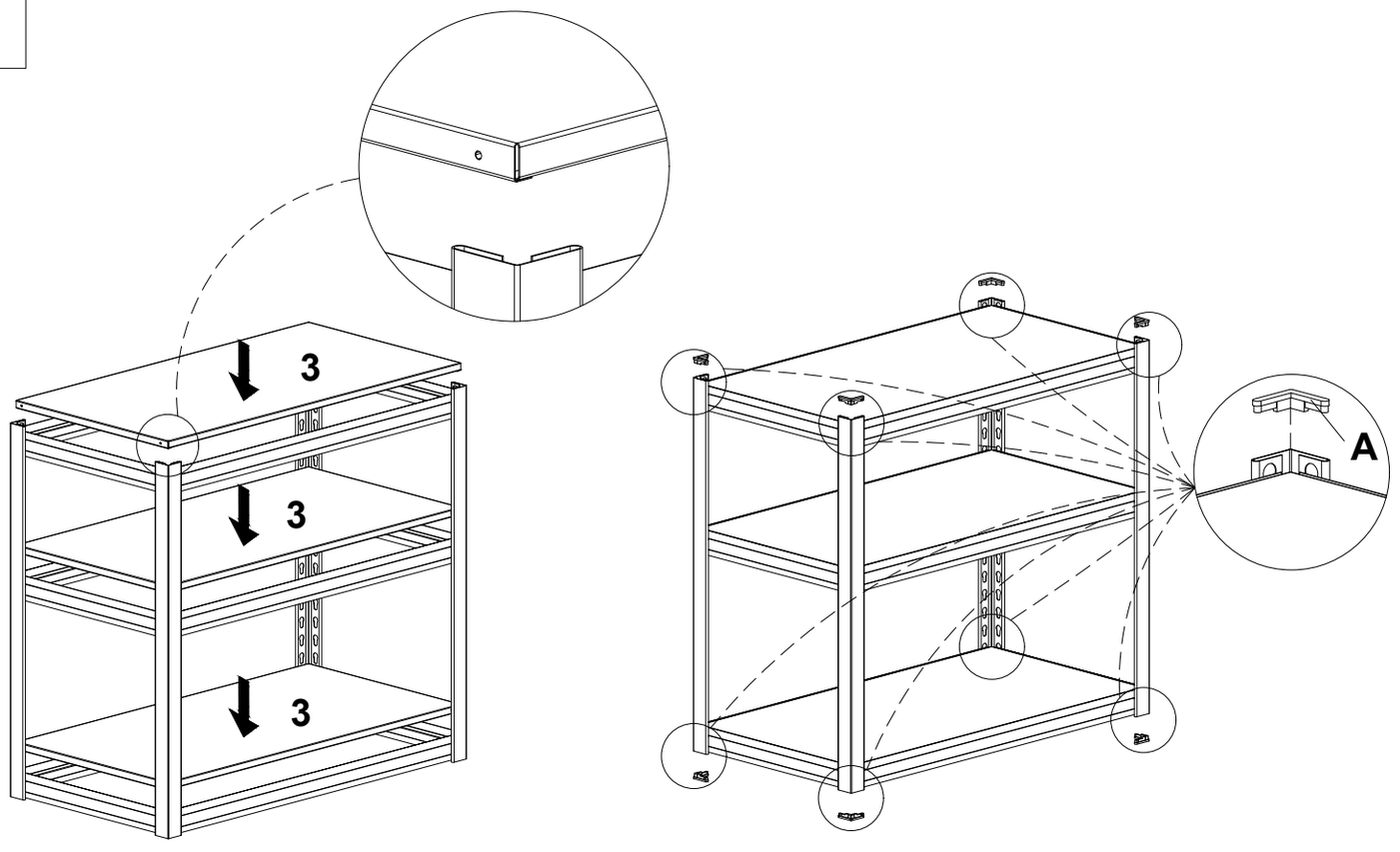



A×8

4

