Single door wall-mounted assembly Instruction [Item:W(09-21)(30-36)(12-15)]

Important: Read This Before You Start!

Pre-Installation Tips & Safety Notes



1. Lay all parts and hardware on a soft carpet/blanket to avoid scratches.
2. Manual screwdriver preferred (low torque for power drill , DO NOT over-tighten screws to avoid wood cracking).
3. LOOSE TIGHTEN FIRST, FULL TIGHTEN ONLY AFTER FULL ALIGNMENT.
4. Clean with soft damp cloth, do not use harsh chemical cleaners.
5. For missing parts or quality issues, contact us 24/7 for free replacement or partial refund.

Panel Parts List

P.ID	P/N	Qty
a	Face Frame	1
b	Side Panel	2
c	Top & Bottom Panel	2
d	Back Panel	1
e	Cabinet Door	1
f	Adjustable Shelf	2

Scan the QR code below
Watch the full installation video

If any issues during assembly contact our customer service

Hardware Accessories List

HW ID	P/N	Specs	Qty	Usage
H1	Bracket Screw	Φ3.5*14mm	62 PCS	Step 1-2
H2	Hinge Screw	Φ4*16mm	4 PCS	Step 5
H3	Large Flat Head Hinge Screw	Φ4*20mm	2 PCS	Step 5
H4	L-Shaped Bracket	90°	8 PCS	Step 1
H5	Bow-Shaped Bracket	180°	8 PCS	Step 2
H6	DTC Soft-Closing Hinge	1-1/4	2 PCS	Step 5
H7	Self-Adhesive Rubber Bumper	/	2 PCS	Step 5
H8	Bent Shelf Supporter	/	8 PCS	Step 6
H9	Wall mounting screws	Φ52mm	4 PCS	/

Wall-mounted cabinet installation steps

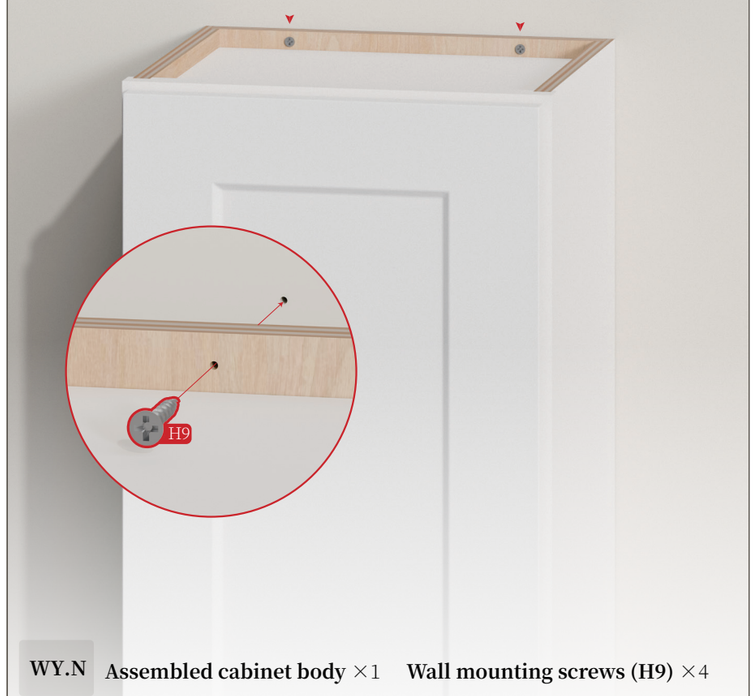

WY.N **Assembled cabinet body** ×1 **Wall mounting screws (H9)** ×4

IMPT Two at the top and bottom of the back panel, used for guiding the wall-mounted cabinet to be fixed to the wall

Troubleshooting Tips

Common Issue	Solution
Brackets won't snap into place	Check bracket orientation from Step 1 & 2: ensure L-bracket vertical side faces outward, bow-bracket middle hole end faces inward.
Doors won't close evenly	Loosen hinge screws slightly, adjust door position, then re-tighten. Use the 6-way adjustment on DTC hinges for fine tuning.
Screws won't go in	Confirm you are using the correct screw for the step, and aligning with pre-drilled holes. Do not force screws into non-drilled areas.
Shelf is not level	Check that all 4 shelf supporters are inserted into the same height holes on left and right side panels.

We provide a variety of cabinet specifications to meet different needs.

All cabinets adopt the same assembly principle and similar hardware, making it easy to operate after mastering this manual.

Wall cabinet(1 Door)





Wall cabinet(2 Doors)





Base Cabinets(1 Door)





Base Cabinets(2 Doors)

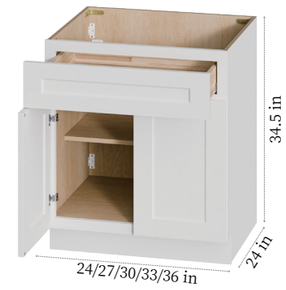



Sink Base Cabinets(1/2 Dr, 1/2 D)





3-Drawer Base Cabinets





Step 1

Install L-Shaped Brackets (H4)
onto Face Frame (a) & Back Panel (d)

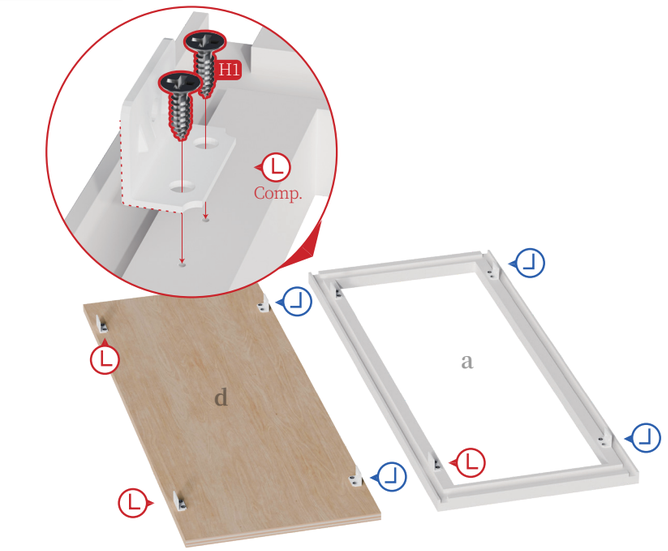

WY.N
Face Frame (a) ×1
L-Shaped Bracket (H4) ×8
Back Panel (d) ×1
Φ3.5*14mm Screw (H1) ×16

IMPT
Align brackets with pre-drilled holes; avoid forcing screws.
Do not over-tighten screws.

Step 2

Install Bow-Shaped Brackets (H5)
onto Side Panels (b)

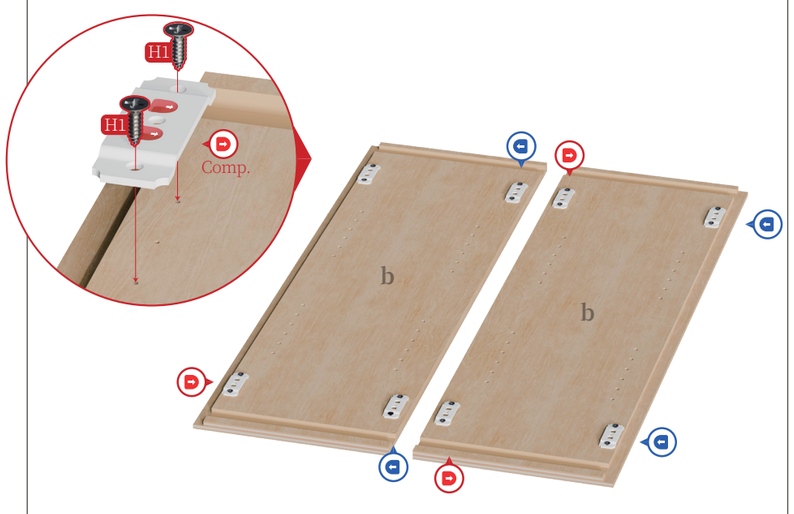

WY.N
Side Panel (b) ×2
Φ3.5*14mm Screw (H1) ×16
Bow-Shaped Bracket (H5) ×8

IMPT
4 brackets per side panel, strictly aligned with pre-drilled holes.
Wrong bracket direction will cause assembly failure in later steps.

Step 3

Assemble Side Panels, Back Panel,
Top & Bottom Panels



WY.N
Back Panel (d) w/H4×2
Side Panel (b) w/H5 ×2
Top Panel (c) ×1
Bottom Panel (c) ×1
Φ3.5*14mm Screw (H1) ×4

IMPT
Ensure all brackets are fully snapped, no gaps between panels.
Top and bottom panels must fit fully into the slots, no protruding edges.

Step 4

Attach Face Frame (a) to the Cabinet Body



WY.N
Assembled cabinet body (from Step 3)×1
Face Frame (a) w/H4×1
Φ3.5*14mm Screw (H1) ×4

IMPT
Double-check all panels are aligned before fully tightening screws.
If misaligned, loosen screws slightly, adjust panels, then re-tighten.

Step 5

Install Hinges, Rubber Bumpers & Cabinet Doors

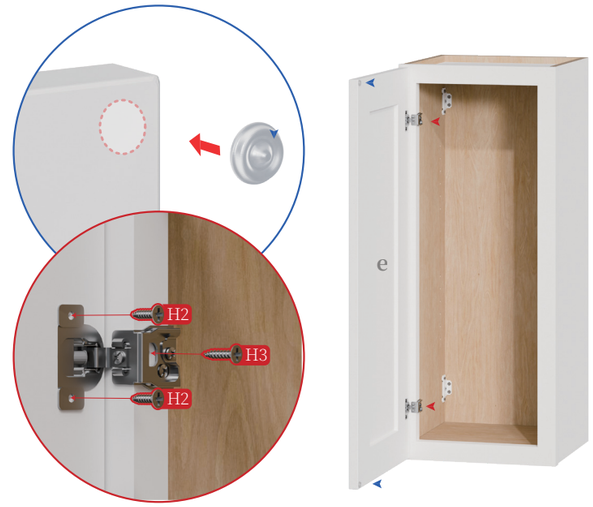

WY.N
Fully tightened cabinet body、Cabinet Door (e) ×2
Φ4*16mm Screw (H2) ×4
DTC Hinge (H6) ×2
Φ4*20mm Screw (H3) ×2
Rubber Bumper (H7) ×2

IMPT
Align hinges strictly with pre-drilled holes to avoid door misalignment
Adjust hinges after installation to ensure smooth soft-close operation

Step 6

Install Shelf Supporters & Adjustable Shelves



WY.N
Fully assembled cabinet、Shelf Supporter (H8) ×8
Adjustable Shelf (f) ×2

IMPT
All 4 shelf supporters must be at the same height to keep the shelf level
Do not exceed the maximum weight capacity of 50 LBS per shelf