NTQ®
Better Life Together

626 679 3588
support@trendytotesinc.com
162 Atlantic St, Pomona, CA 91768

SIZE DETAILS

Pedestal Bathroom Sink

support@trendytotesinc.com
626 679 3588

SCAN ME
PRODUCT INSTRUCTION VIDEO

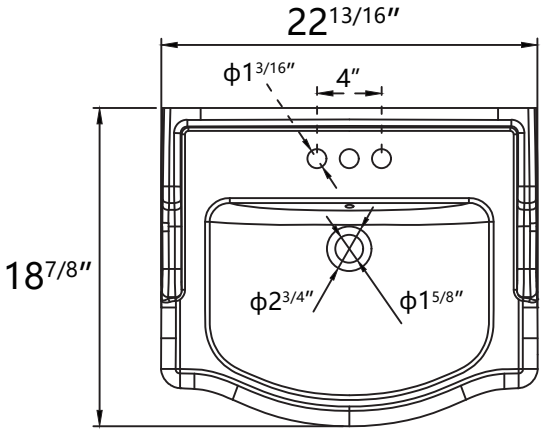
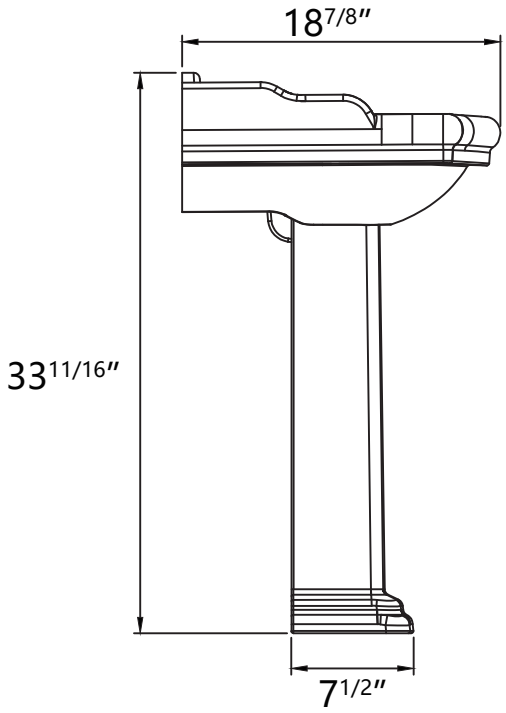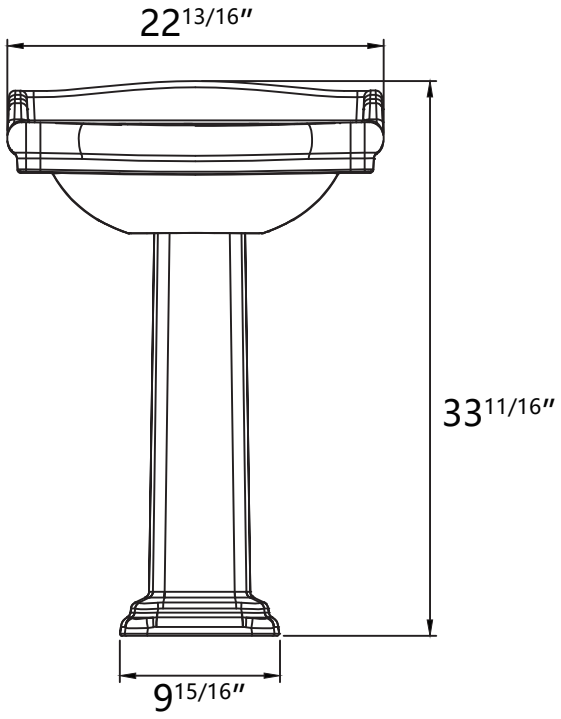
All dimensions are nominal, minor variations may occur.