ASSEMBLY INSTRUCTION



ASSEMBLY INSTRUCTION

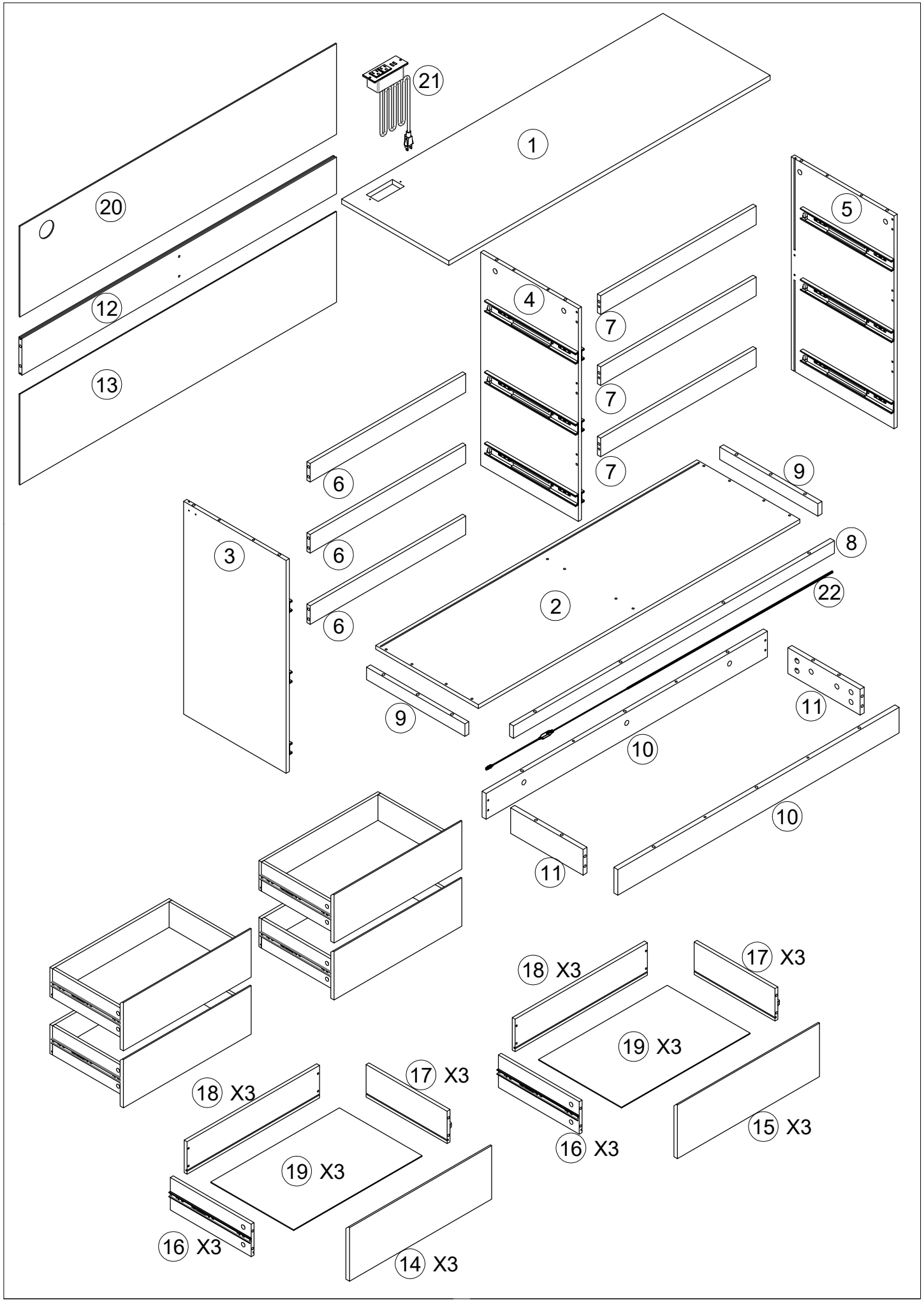

ASSEMBLY INSTRUCTION

1 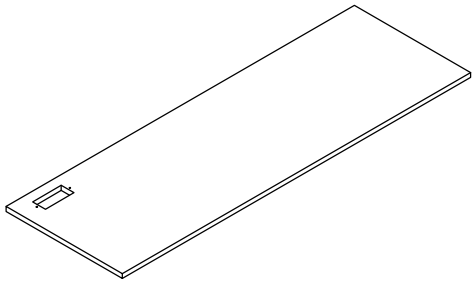 X1	2 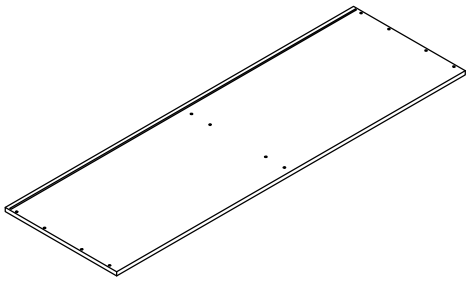 X1	3 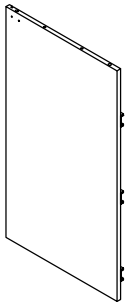 X1
4 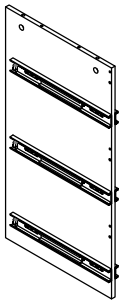 X1	5 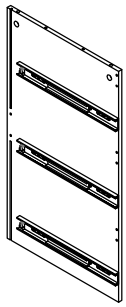 X1	6 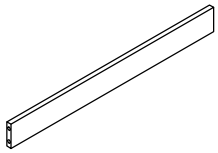 X3
7 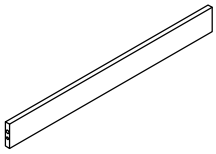 X3	8 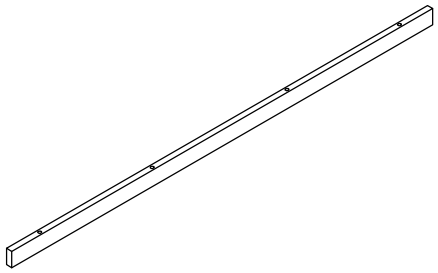 X1	9 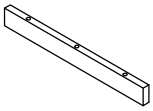 X2
10 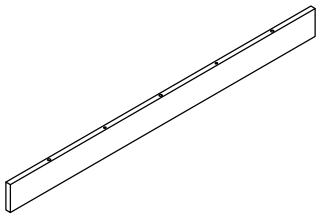 X2	11  X2	12 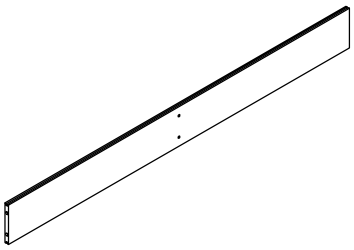 X1
13 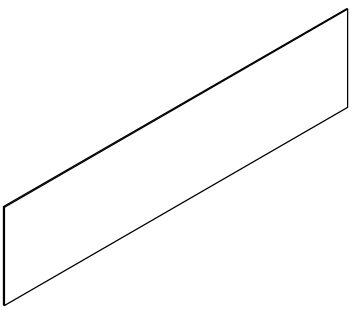 X1	14 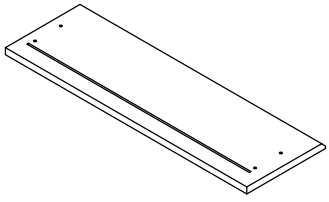 X3	15 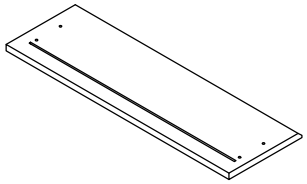 X3

ASSEMBLY INSTRUCTION

16 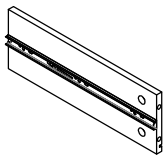 X6	17 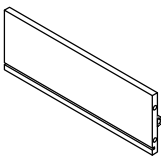 X6	18 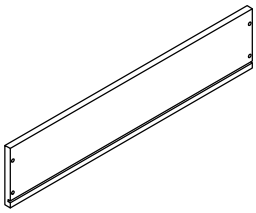 X6	19 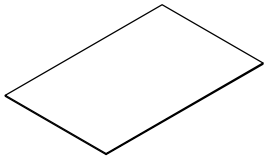 X6
20 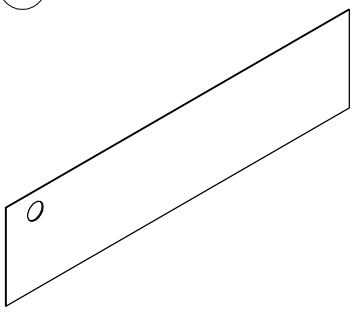 X1	21 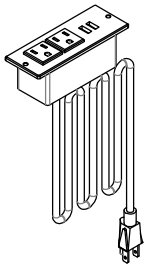 X1	22 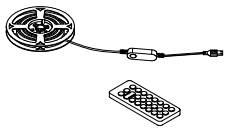 X1	

PART LIST

A	B	C	D
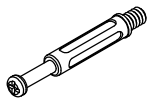		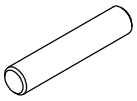	
ST6*40mm	9.5	∅6*35mm	ST5*40mm
70PCS	70PCS	22PCS	32PCS

E	F	G	H
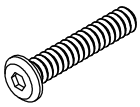			
M6*45mm	ST3.5*14mm		
10PCS	12PCS	8PCS	7PCS

L	M		
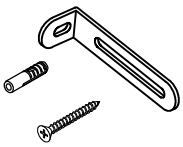		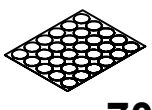 70	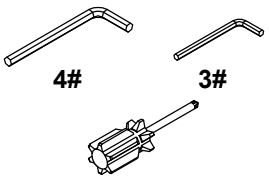
2PCS	6PCS	1PC	1PC

ASSEMBLY INSTRUCTION

STEP 1

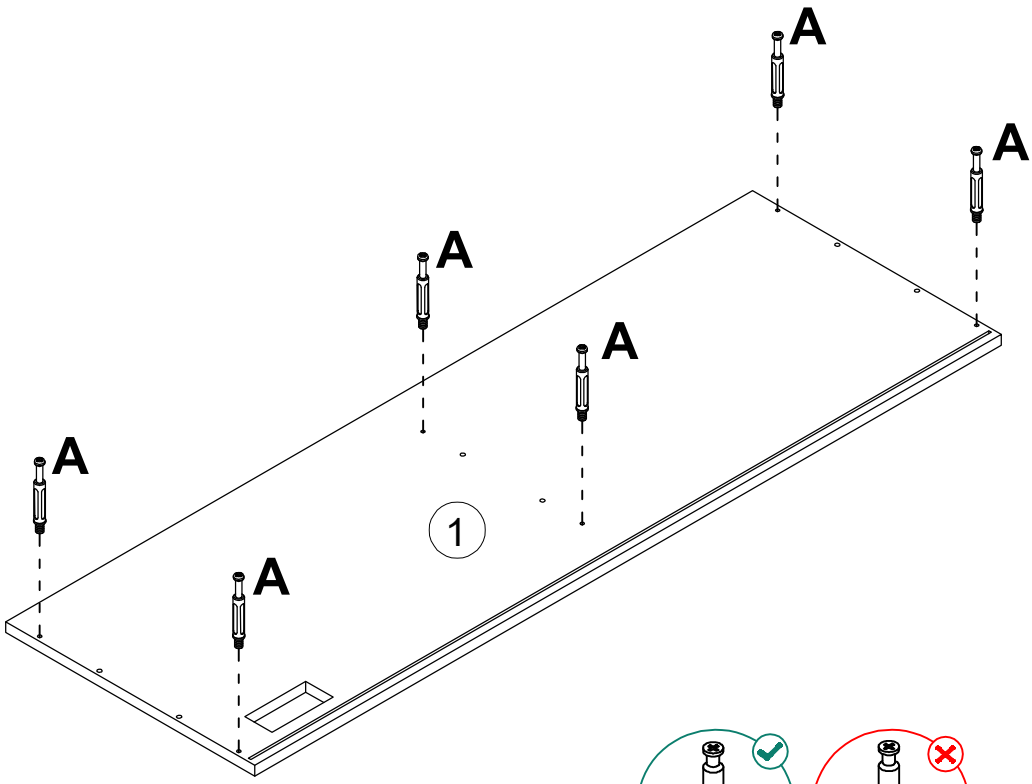

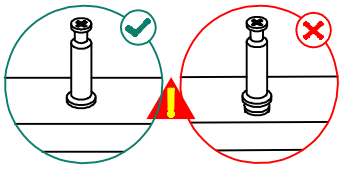

A

ST6*40mm
6PCS

STEP 2

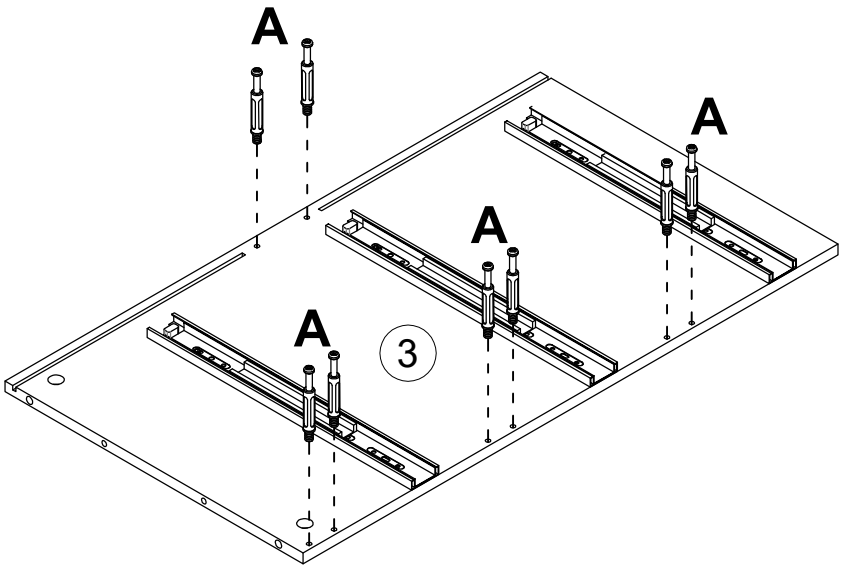

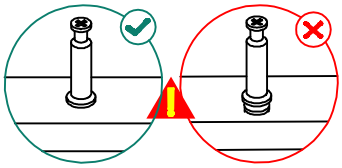

A

ST6*40mm
8PCS

ASSEMBLY INSTRUCTION

STEP 3

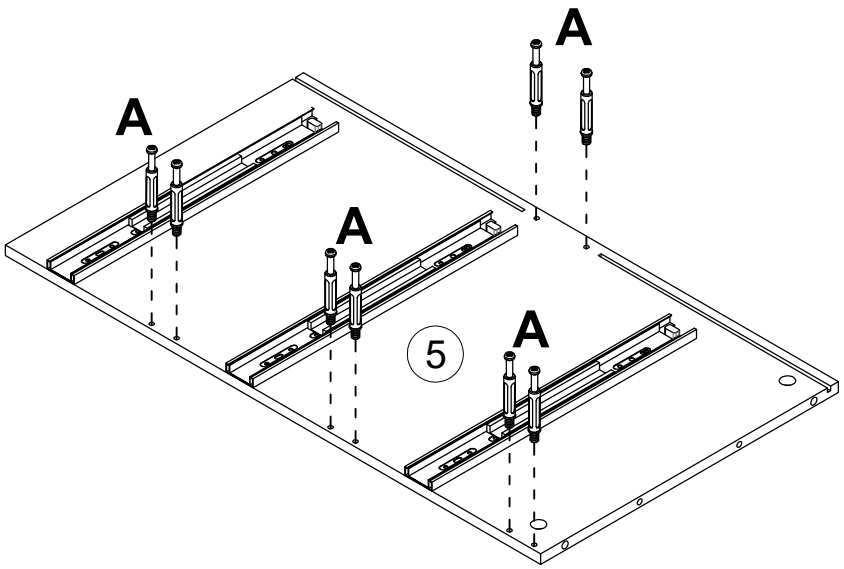

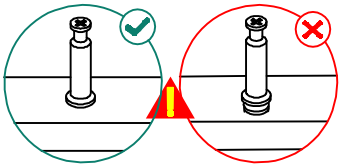

A

ST6*40mm
8PCS

STEP 4

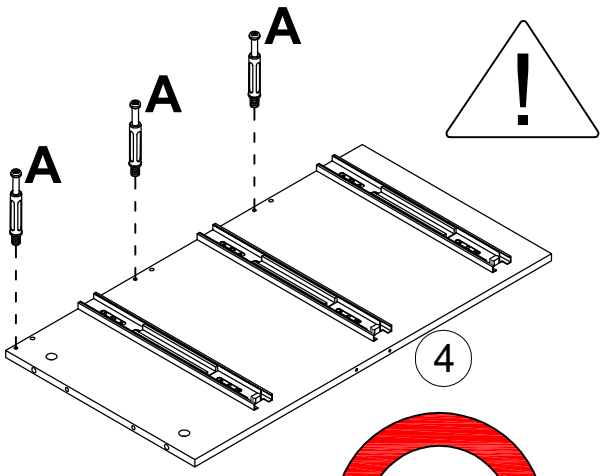

Note that when installing this step, you need to install the A screw from the opposite side.

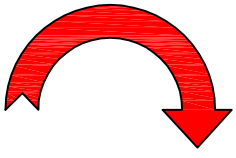

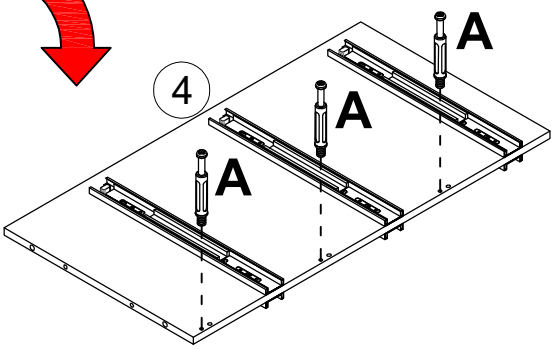

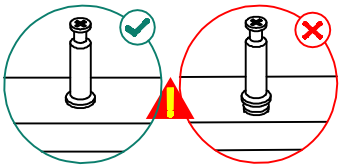

A

ST6*40mm
6PCS

ASSEMBLY INSTRUCTION

STEP 5

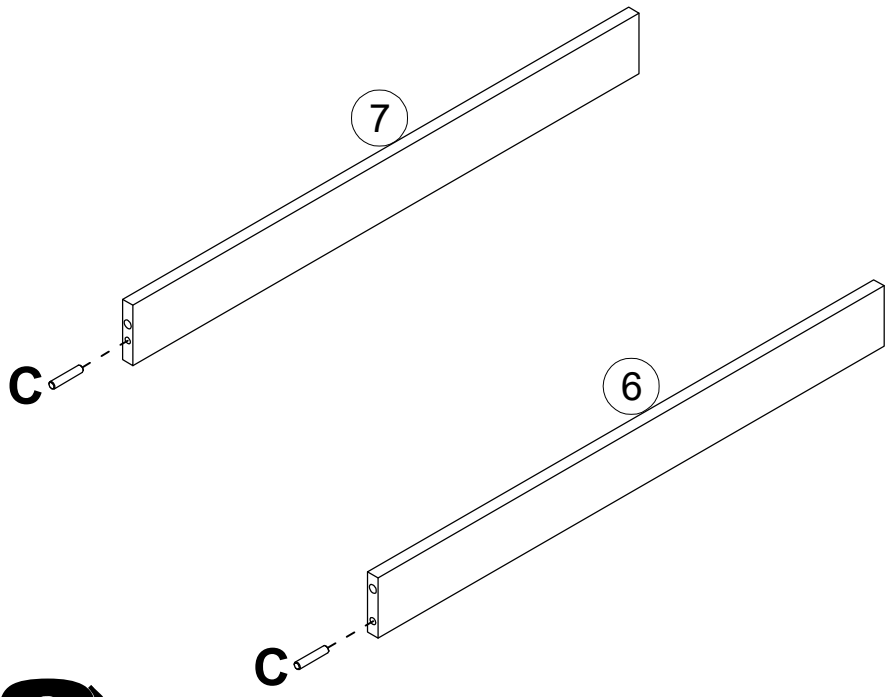

X3

C
6*30mm
6PCS

STEP 6

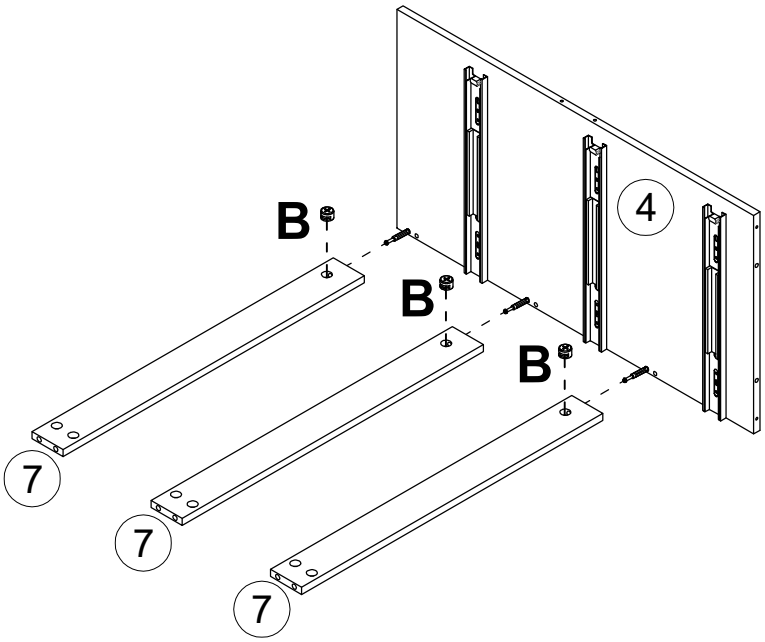

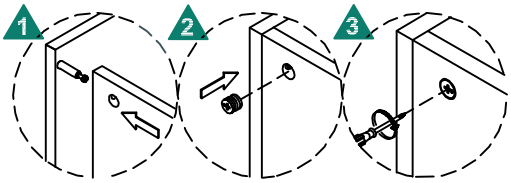

B
9.5
3PCS

ASSEMBLY INSTRUCTION

STEP 7

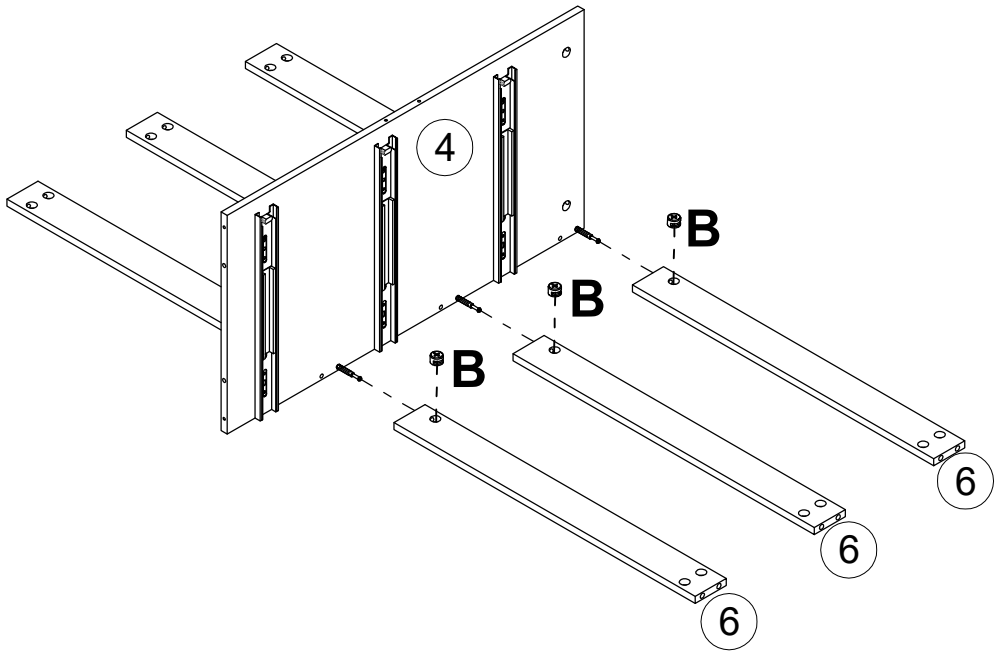

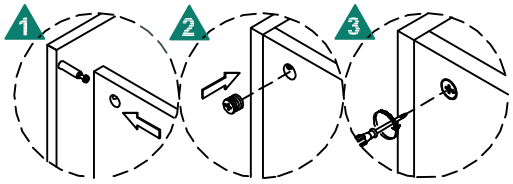

B
9.5
3PCS

STEP 8

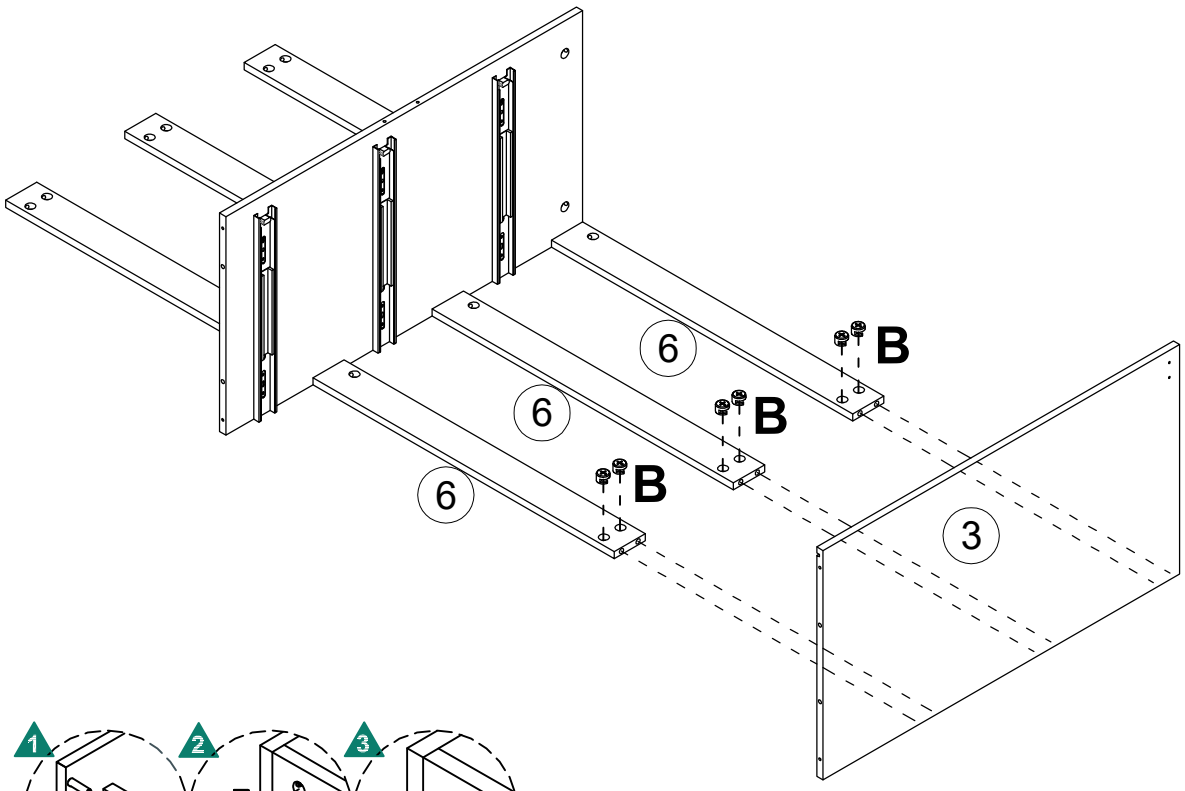

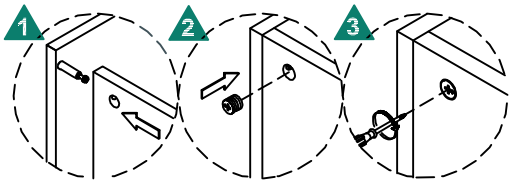

B
9.5
6PCS

ASSEMBLY INSTRUCTION

STEP 9

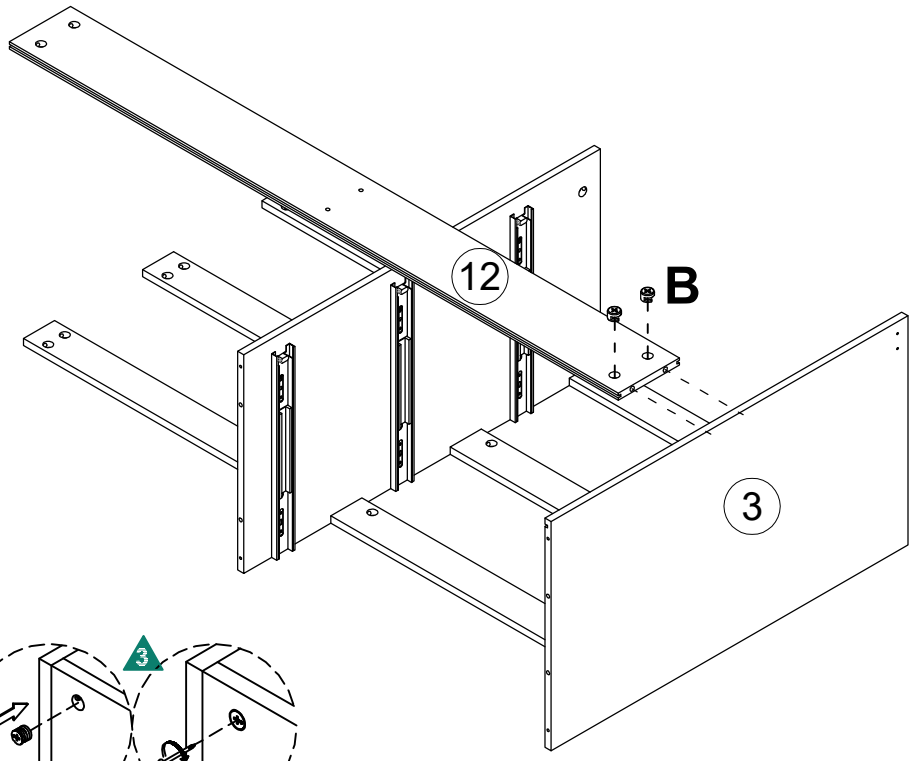

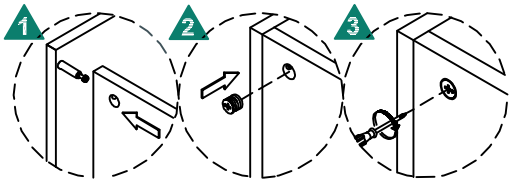

B

9.5
2PCS

STEP 10

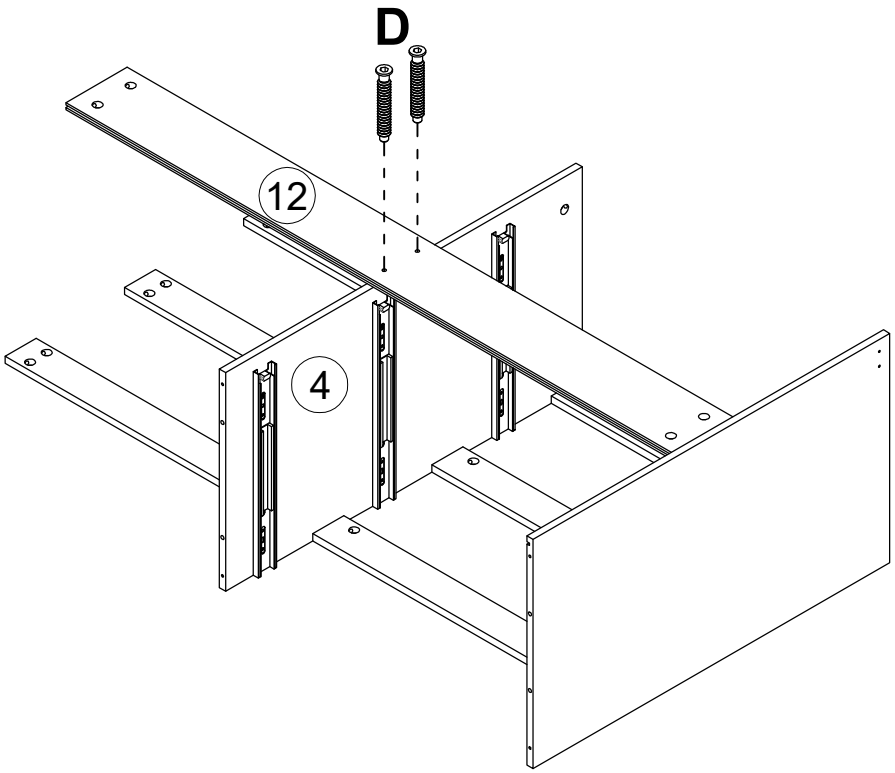

D

ST5*40mm
2PCS

ASSEMBLY INSTRUCTION

STEP 11

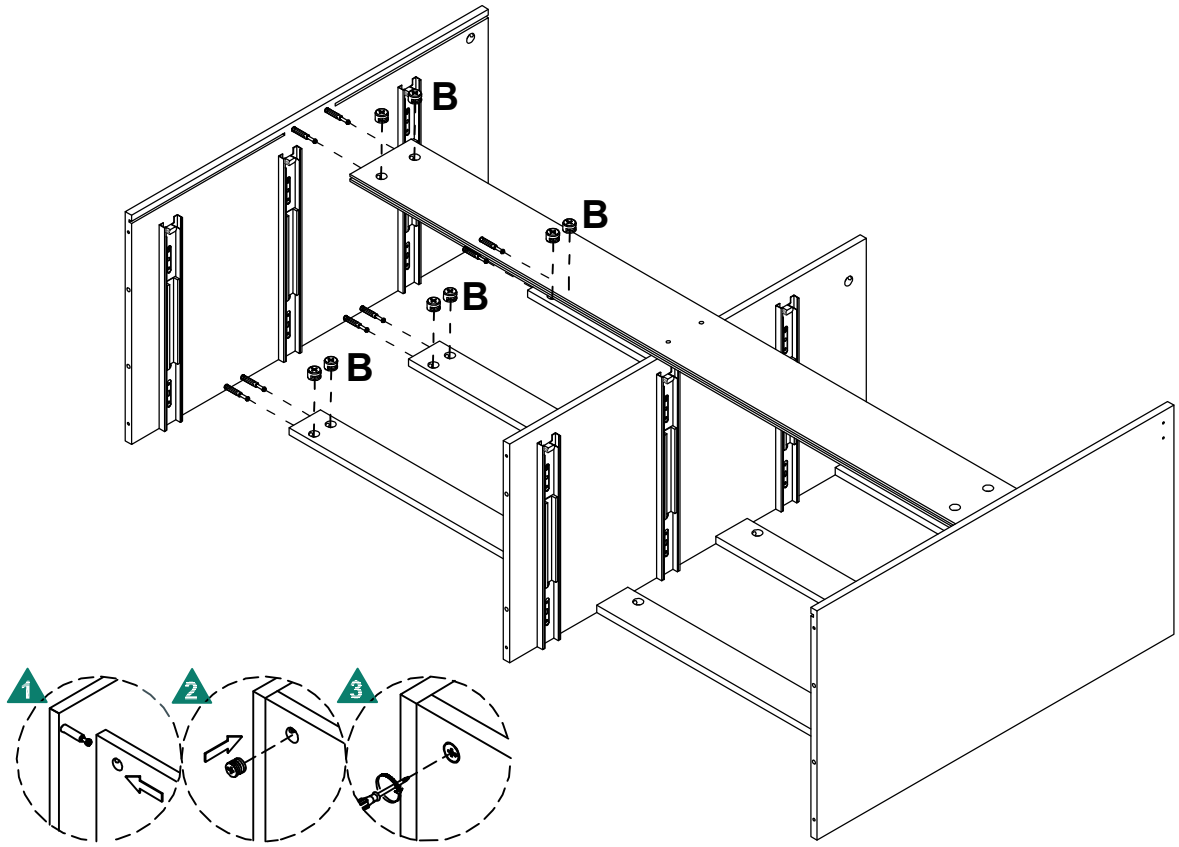

B

9.5
8PCS

STEP 12

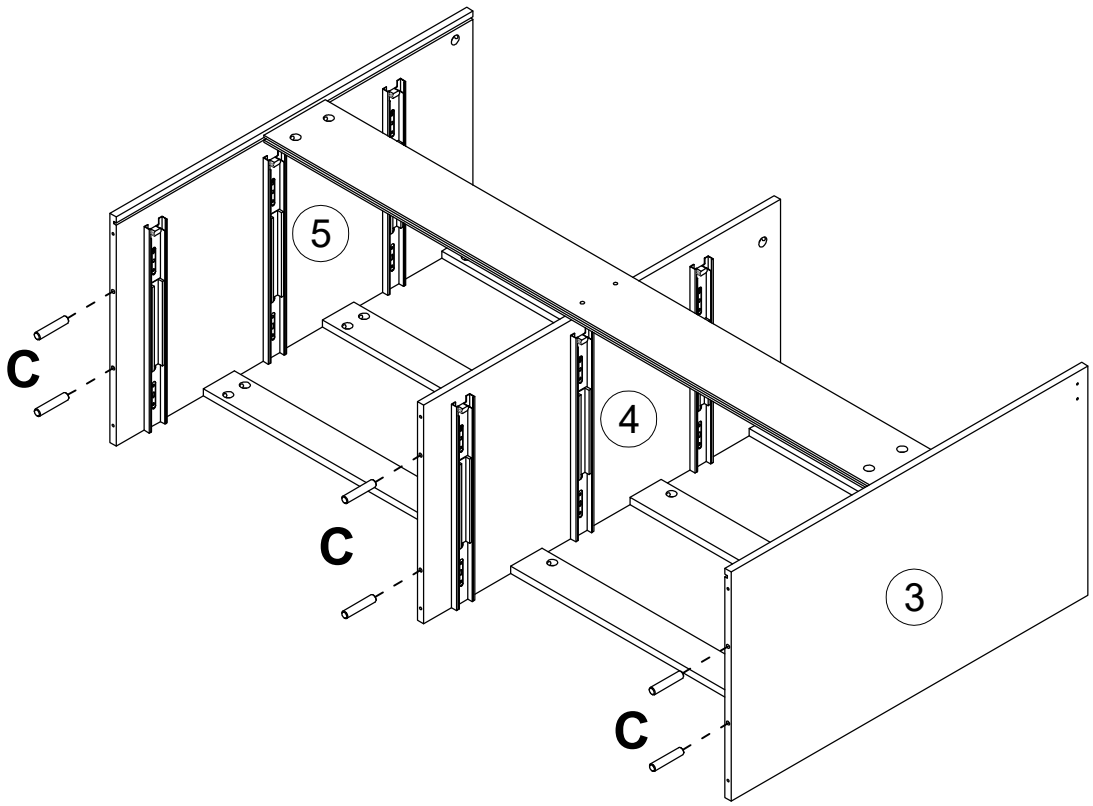

C

Ø6*30mm
6PCS

ASSEMBLY INSTRUCTION

STEP 13

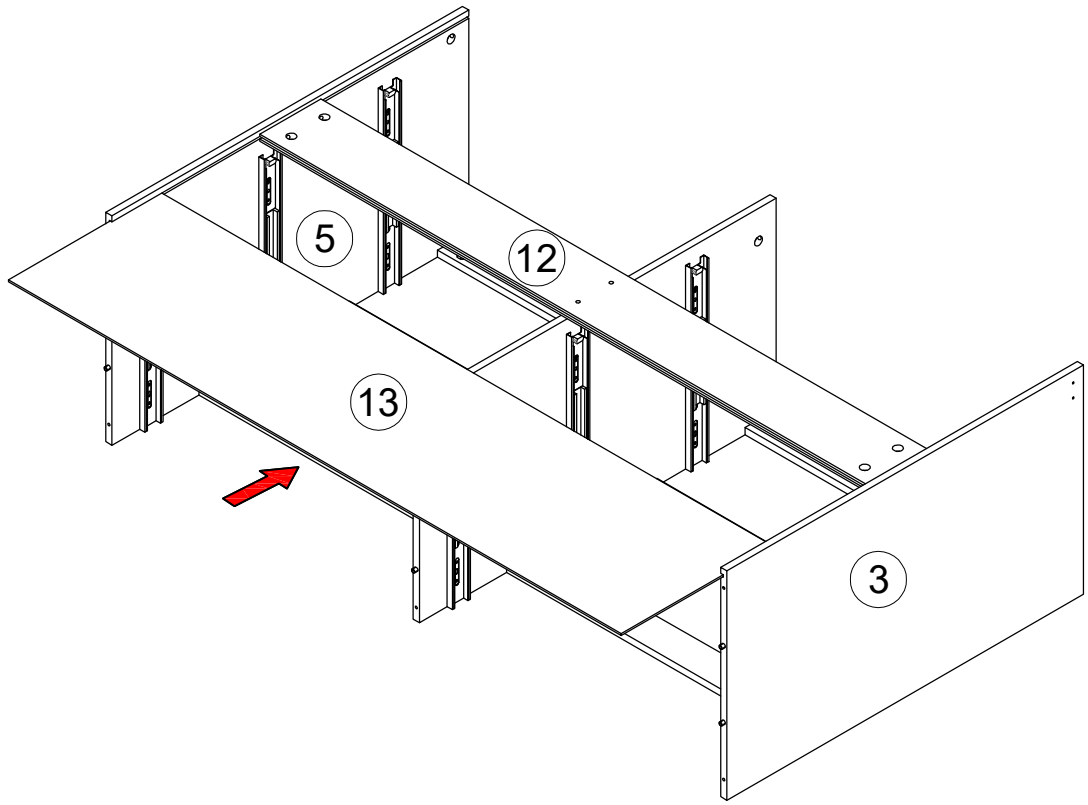

STEP 14

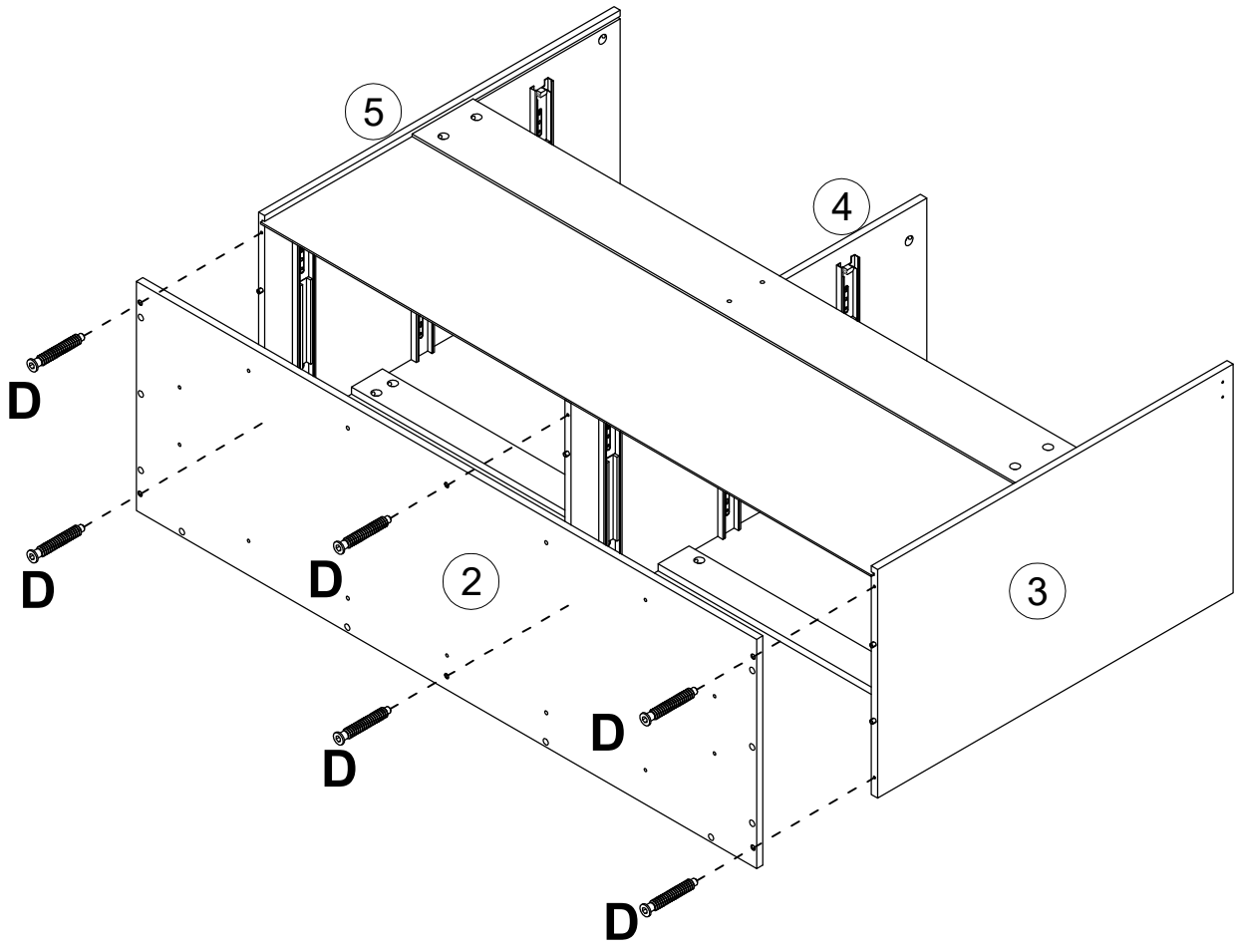

ASSEMBLY INSTRUCTION

STEP 15

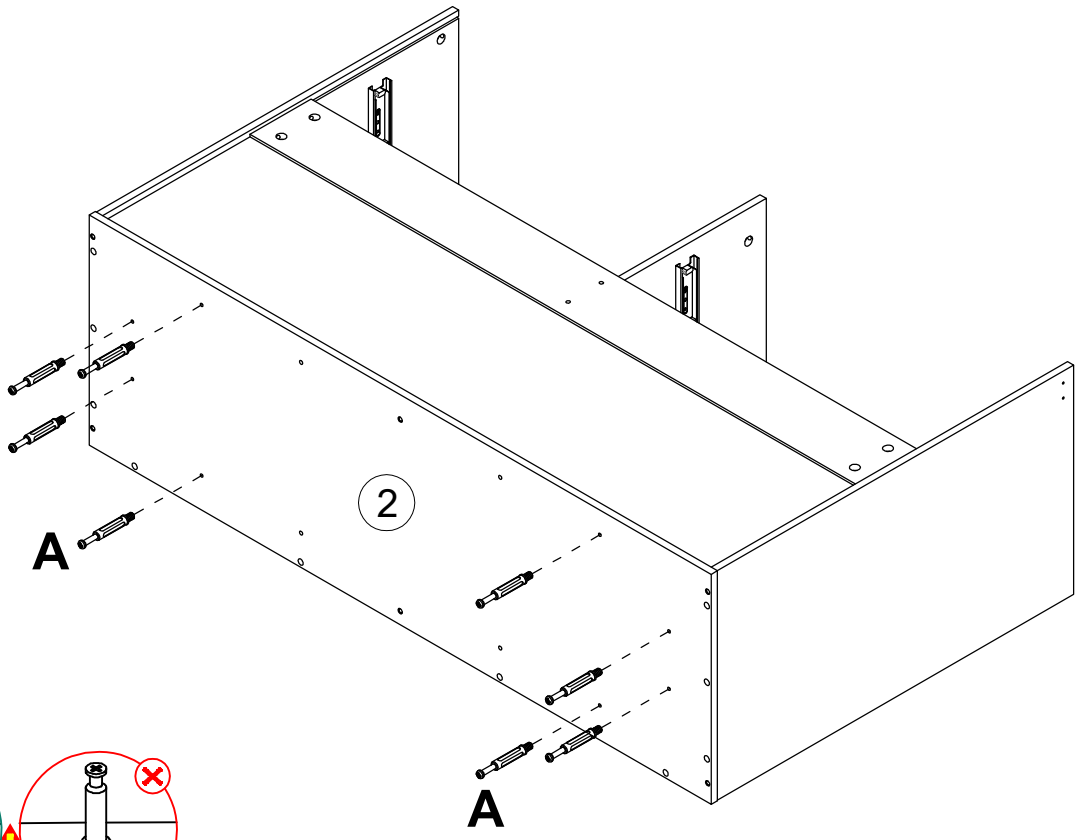

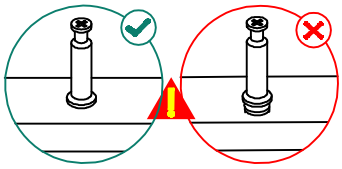

A

ST6*40mm
8PCS

STEP 16

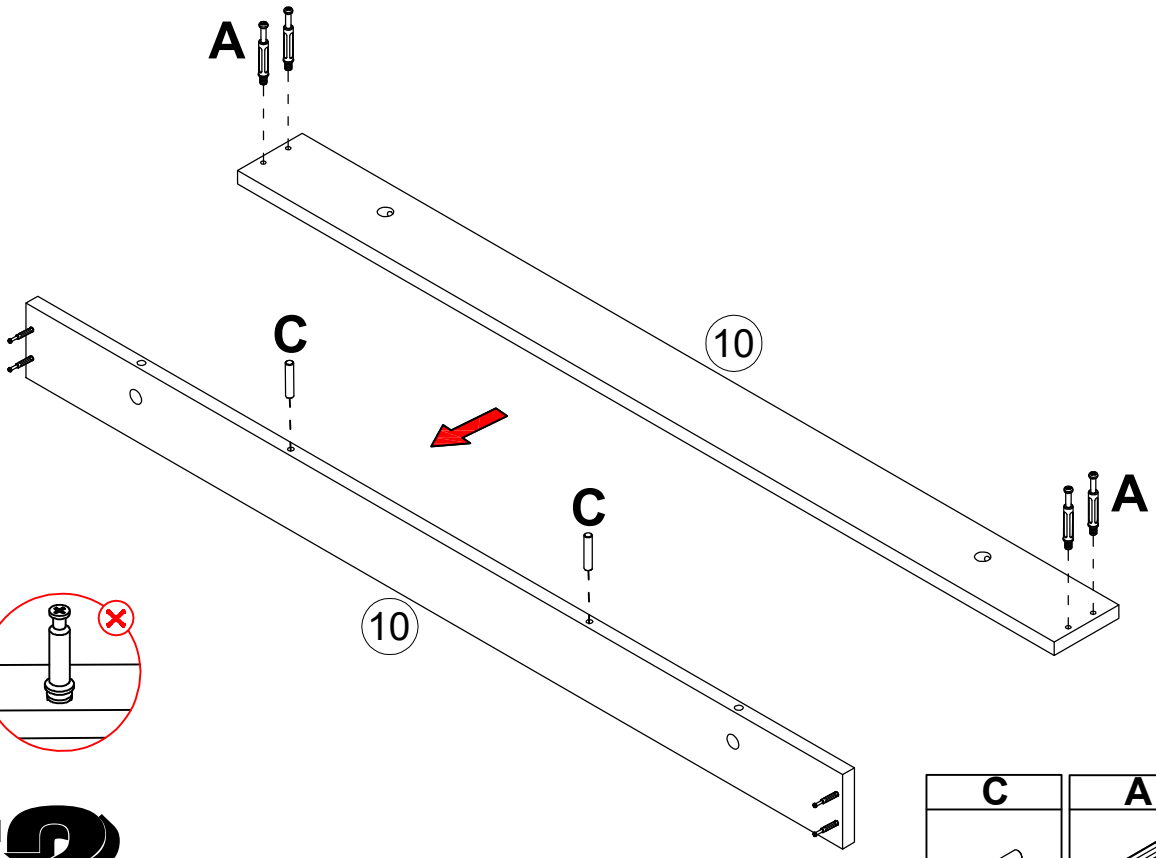

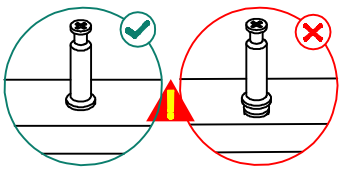

X2

C	A
	
Ø6*30mm	ST6*40mm
4PCS	8PCS

ASSEMBLY INSTRUCTION

STEP 17

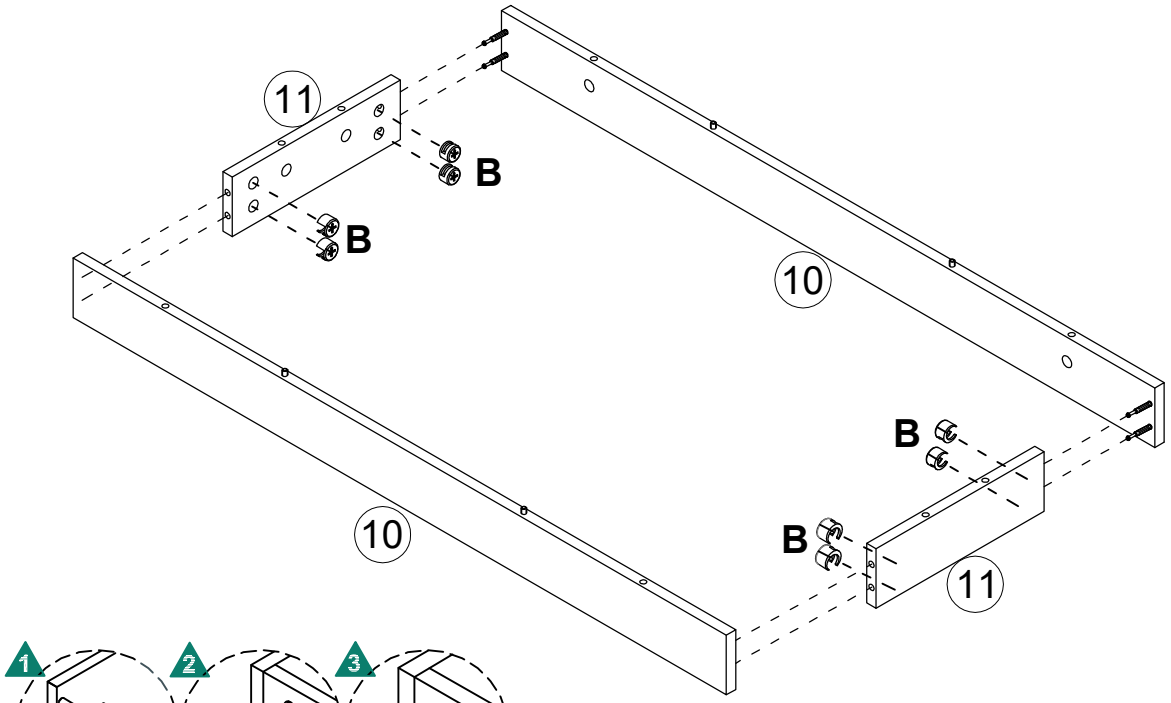

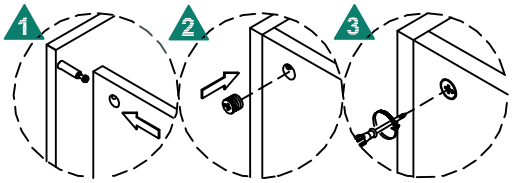

B

9.5
8PCS

STEP 18

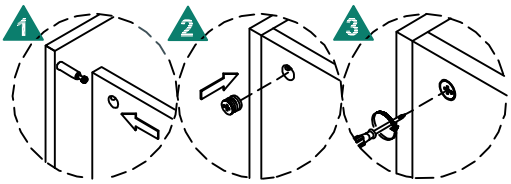

B

9.5
8PCS

ASSEMBLY INSTRUCTION

STEP 19

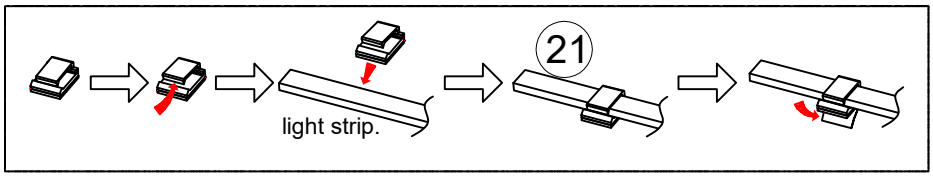

The light strip can be pasted to the desired position according to your own needs.

Note that you can paste the sponge pad according to your own needs.

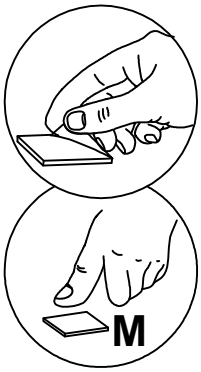

Carefully remove the plastic film behind the light strip.

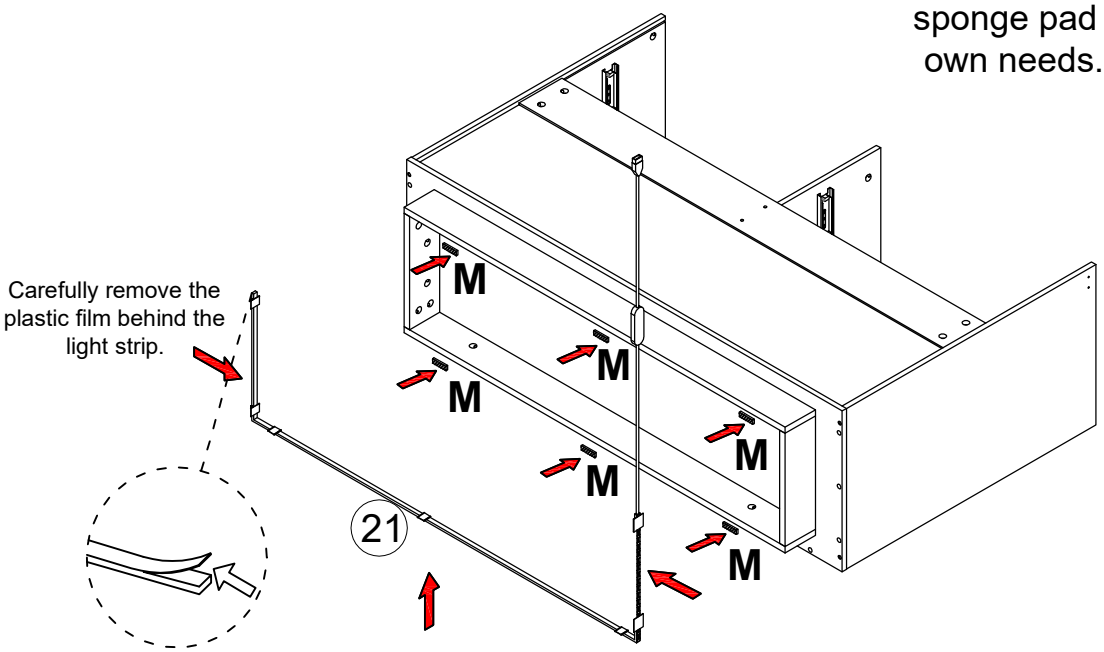

M	H
	
6PCS	7PCS

STEP 20

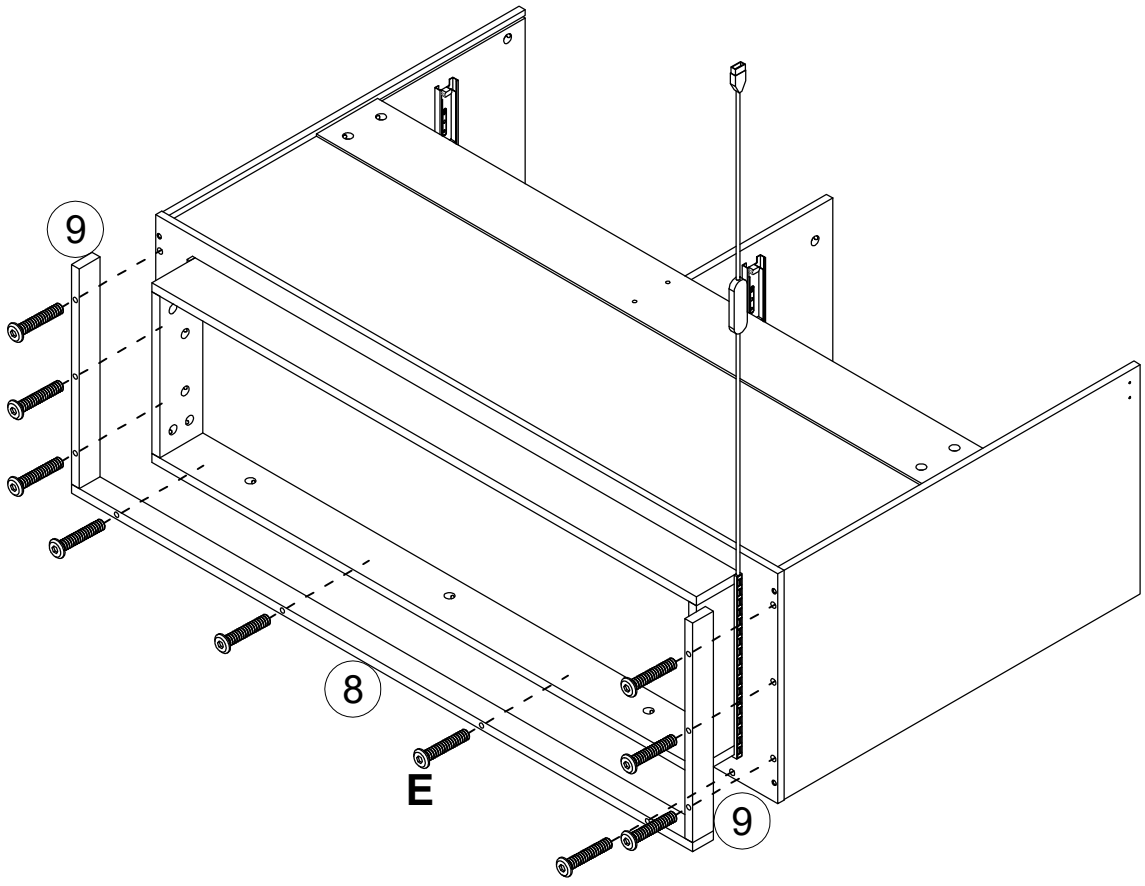

E

M6*45mm
10PCS

ASSEMBLY INSTRUCTION

STEP 21

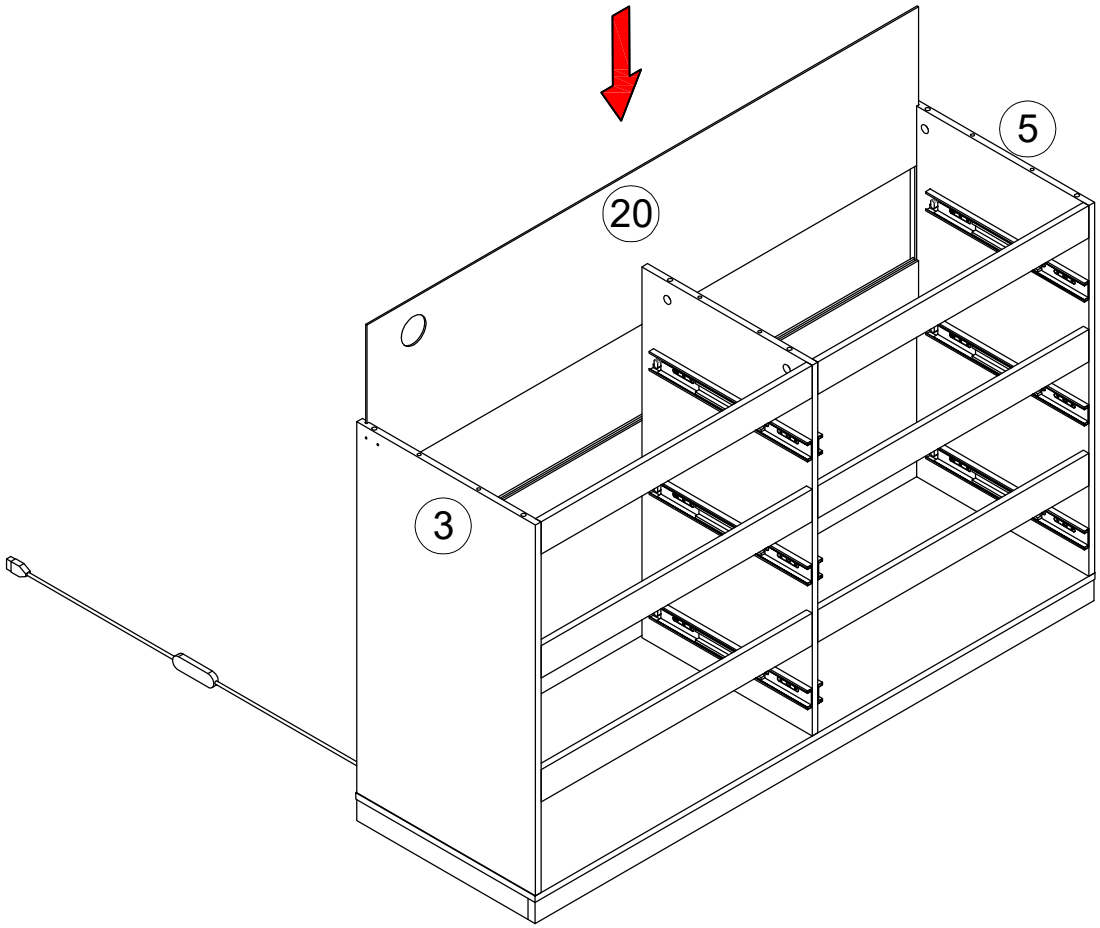

STEP 22

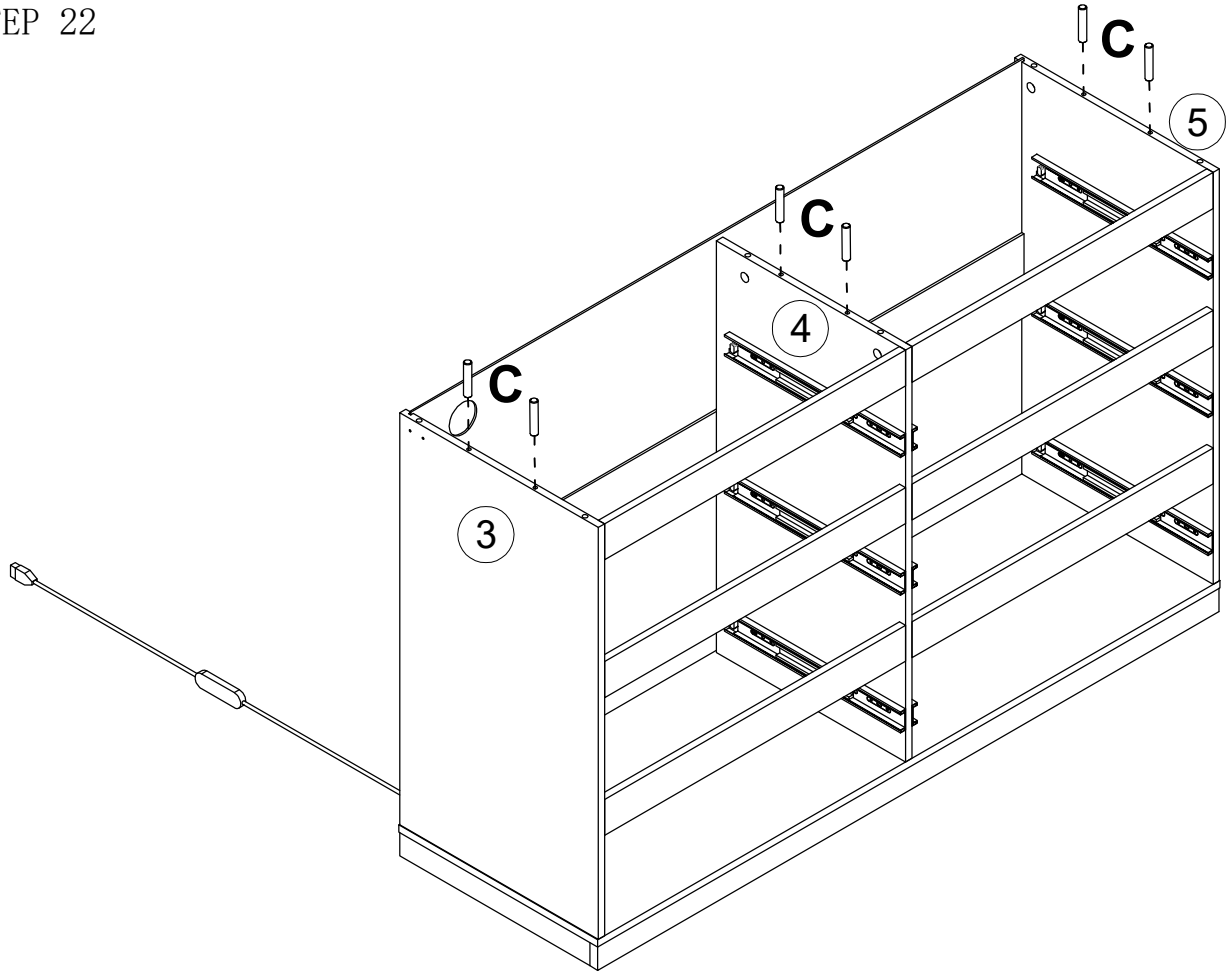

C
Ø6*30mm
6PCS

ASSEMBLY INSTRUCTION

STEP 23

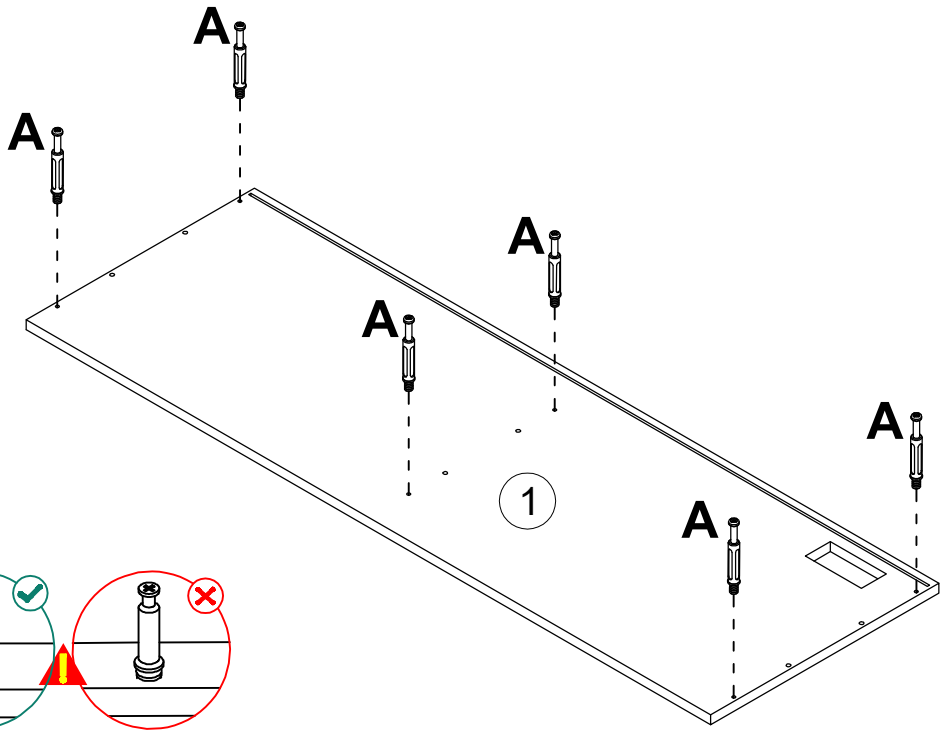

A

ST6*40mm
6PCS

STEP 24

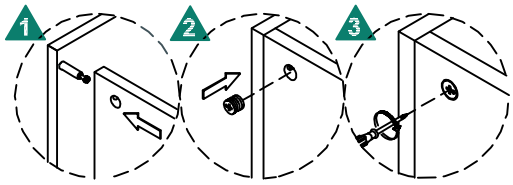

B

9.5
6PCS

ASSEMBLY INSTRUCTION

STEP 25

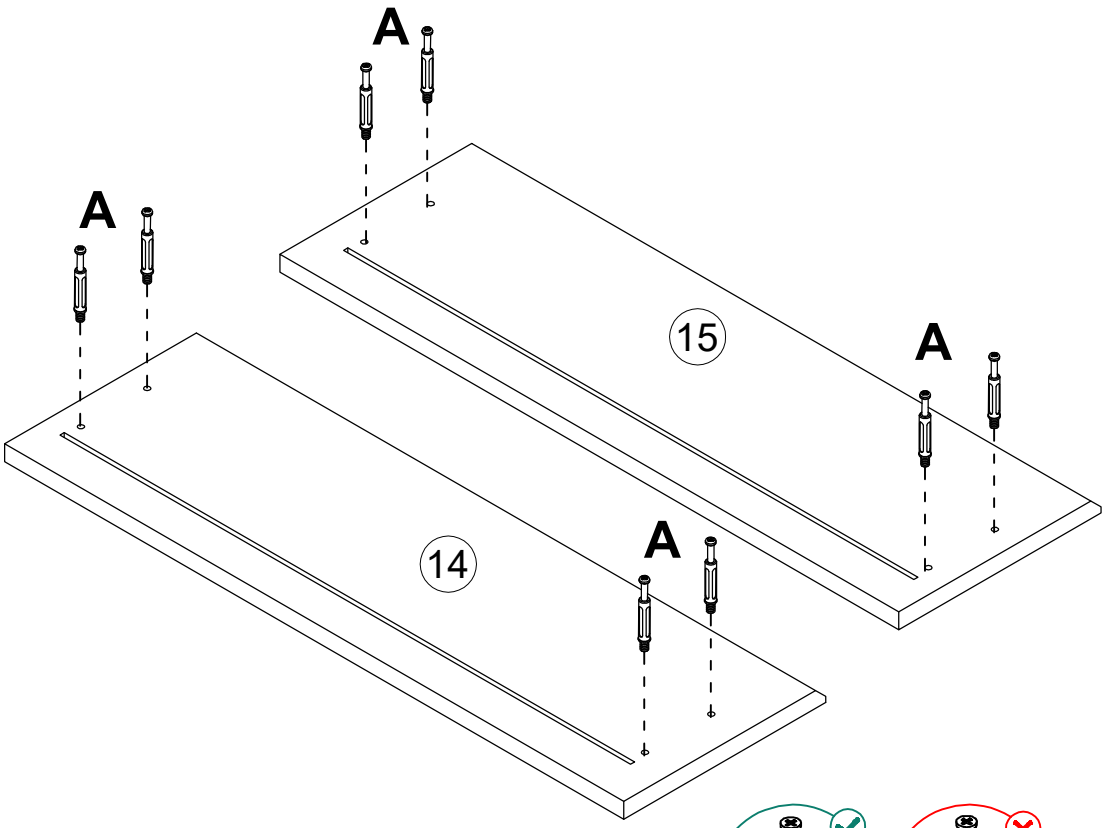

X3

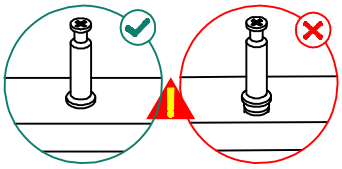

A

ST6*40mm
24PCS

STEP 26

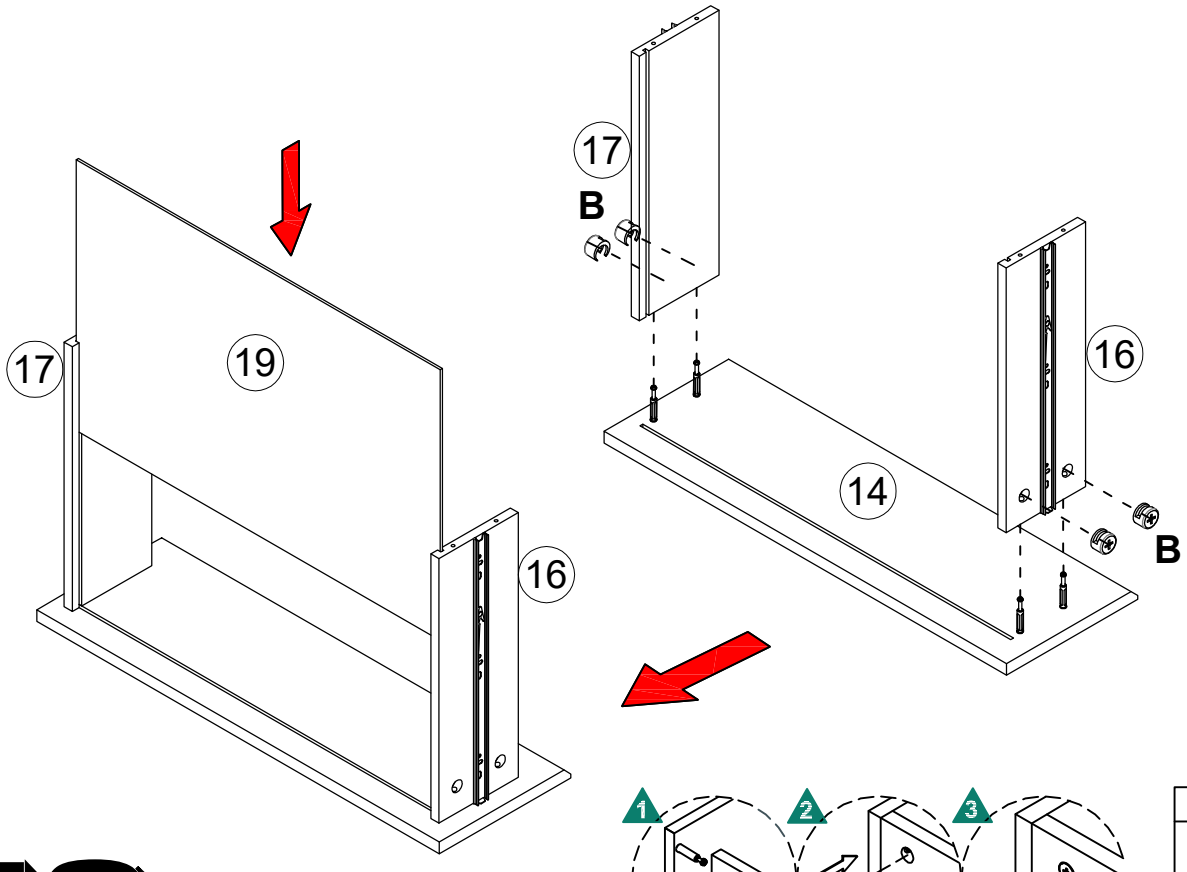

X3

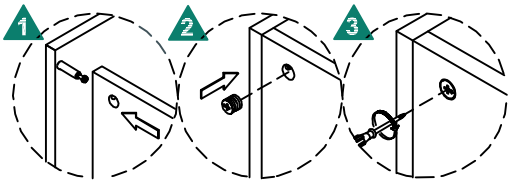

B

9.5
12PCS

ASSEMBLY INSTRUCTION

STEP 27

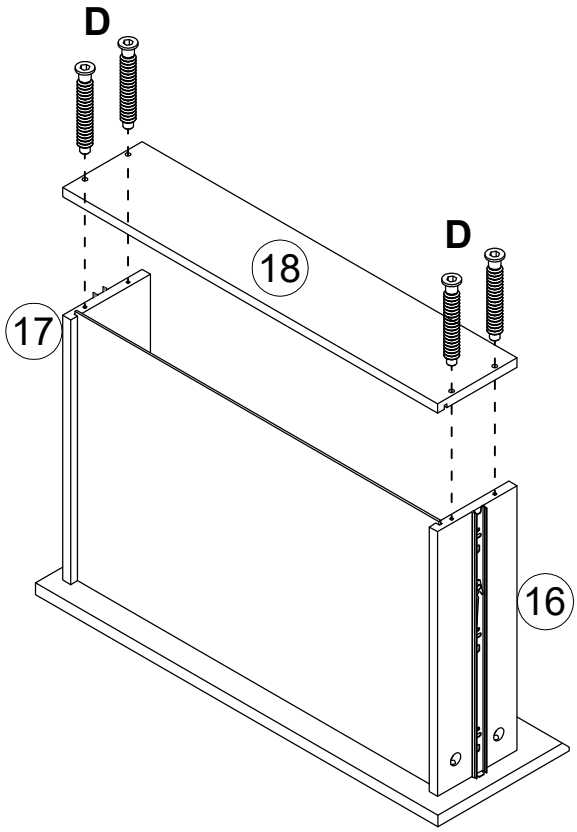

X3

D

ST5*40mm
12PCS

STEP 28

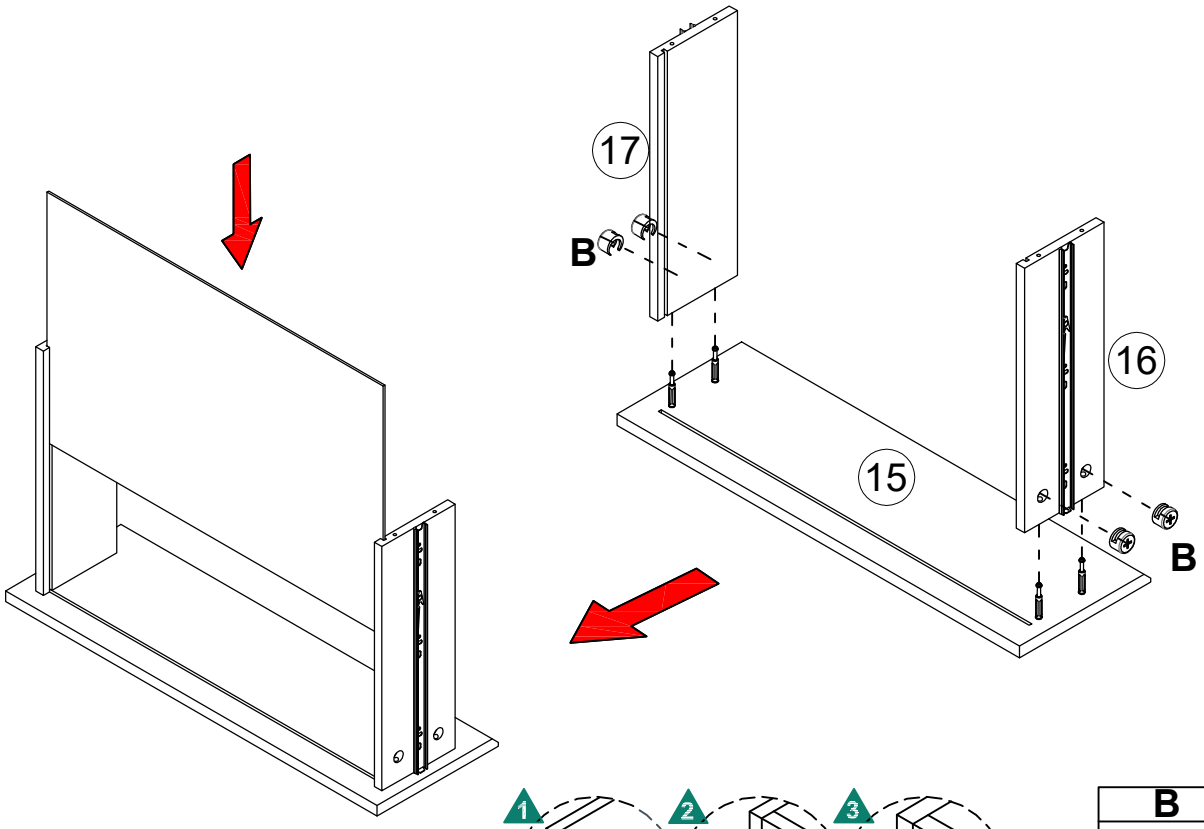

X3

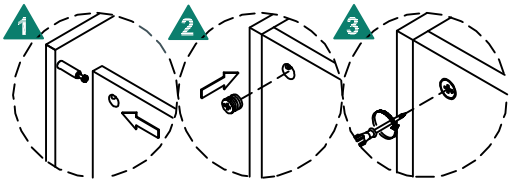

B

9.5
12PCS

ASSEMBLY INSTRUCTION

STEP 29

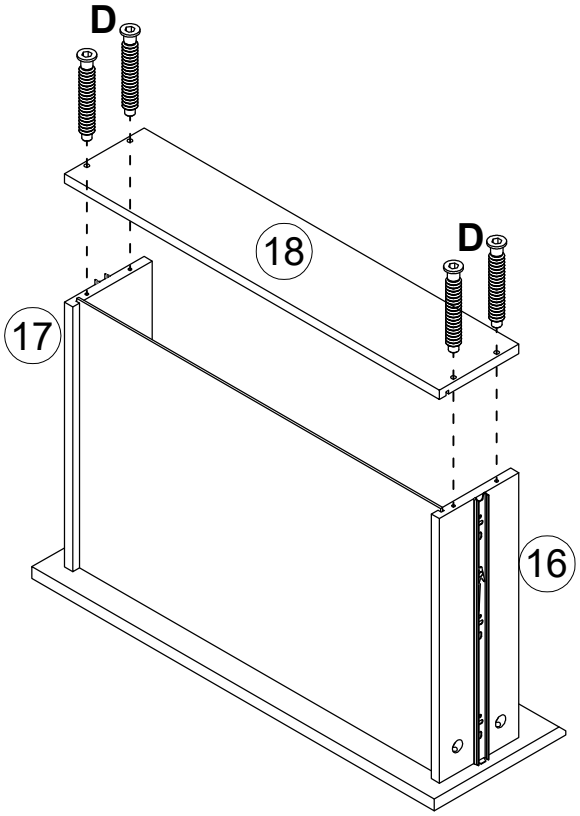

X3

D

ST5*40mm
12PCS

STEP 30

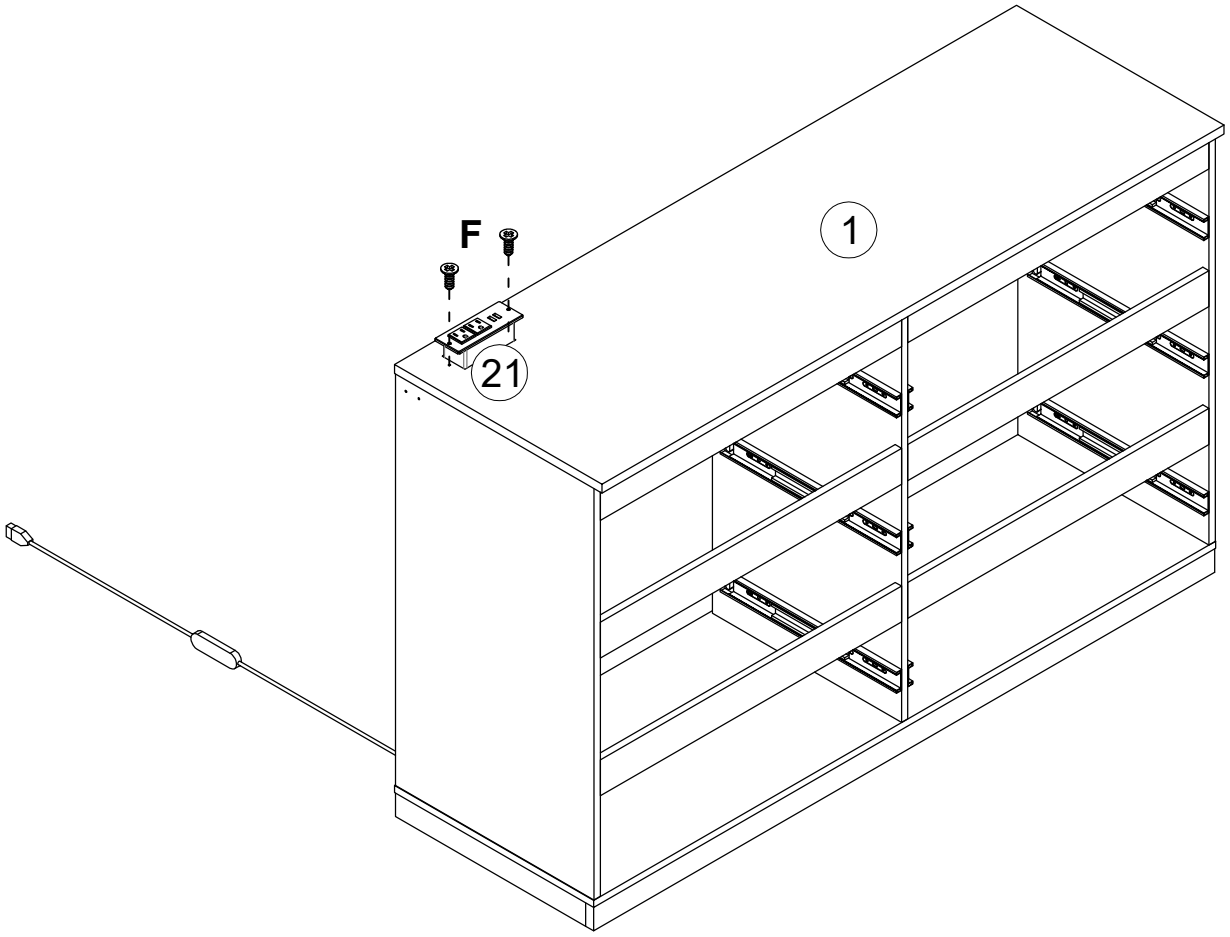

F

ST3.5*14mm
2PCS

ASSEMBLY INSTRUCTION

STEP 31

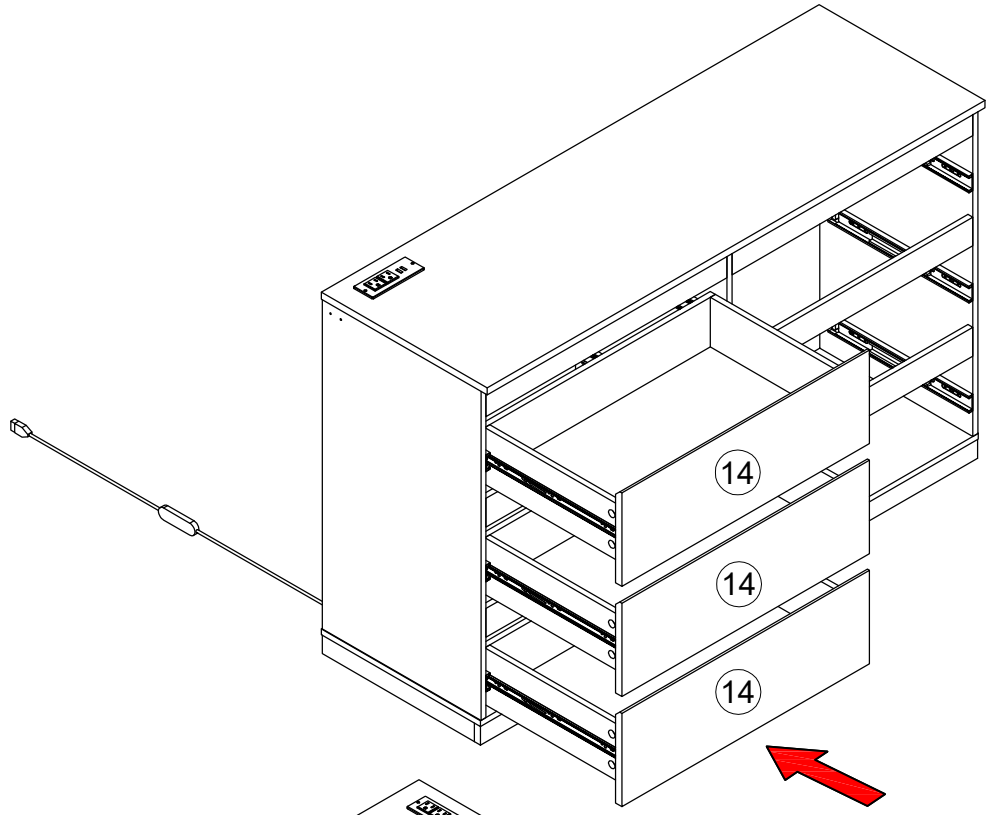

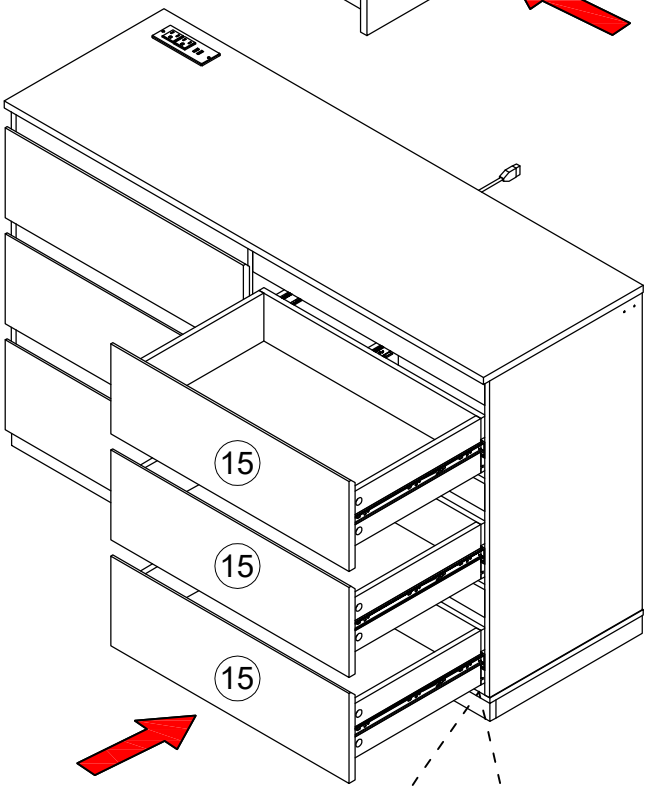

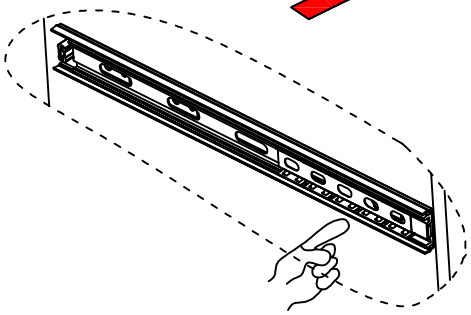

Move the balls of the slide rail on both sides to the position as shown in the figure.

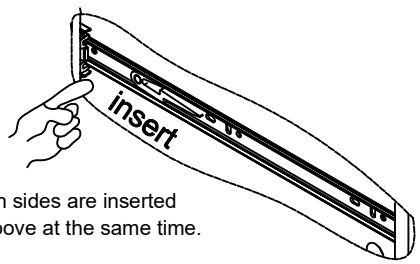

Slide rail on both sides are inserted into the slide groove at the same time.

ASSEMBLY INSTRUCTION

STEP 32

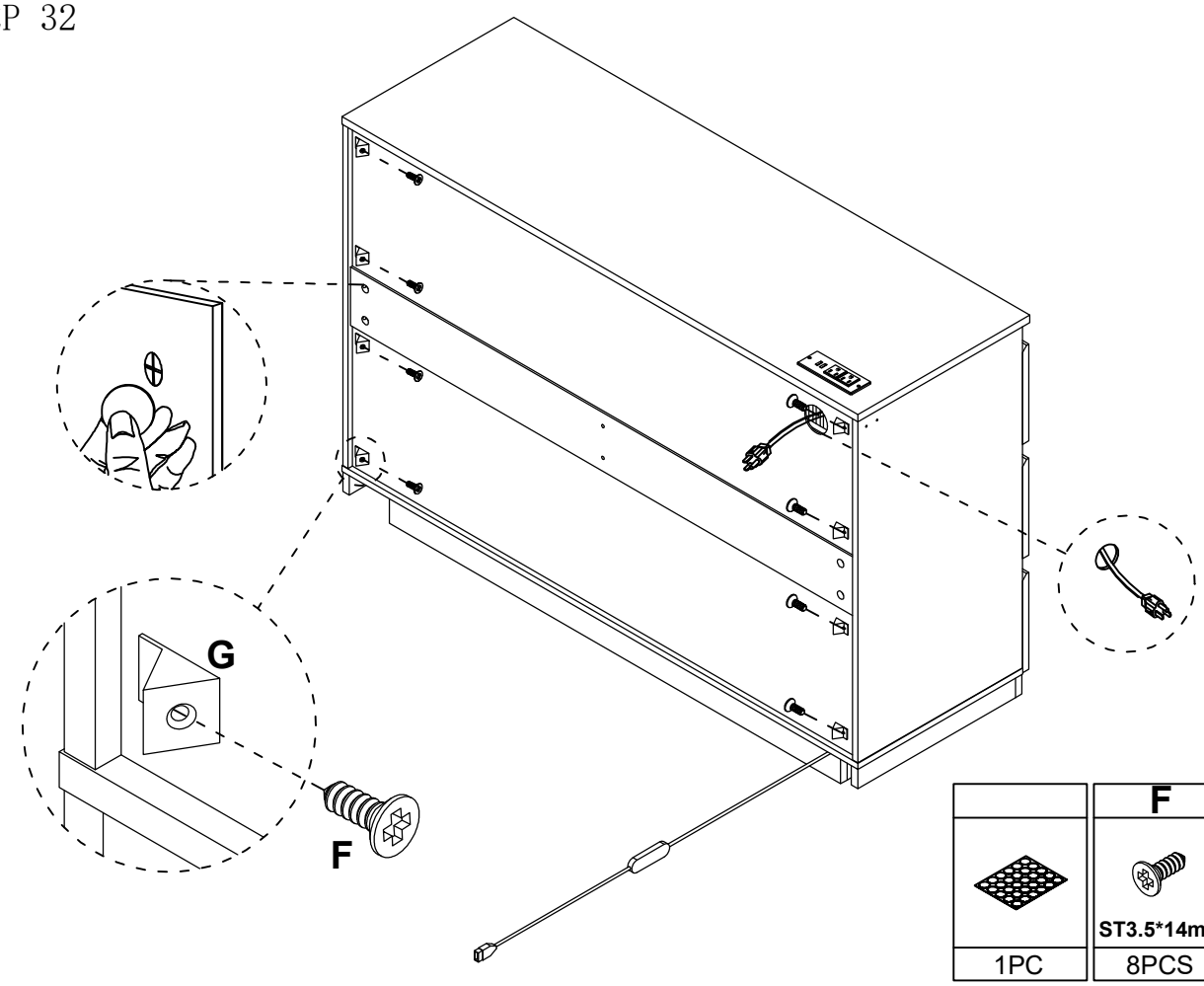

	F	G
	ST3.5*14mm	
1PC	8PCS	8PCS

STEP 33

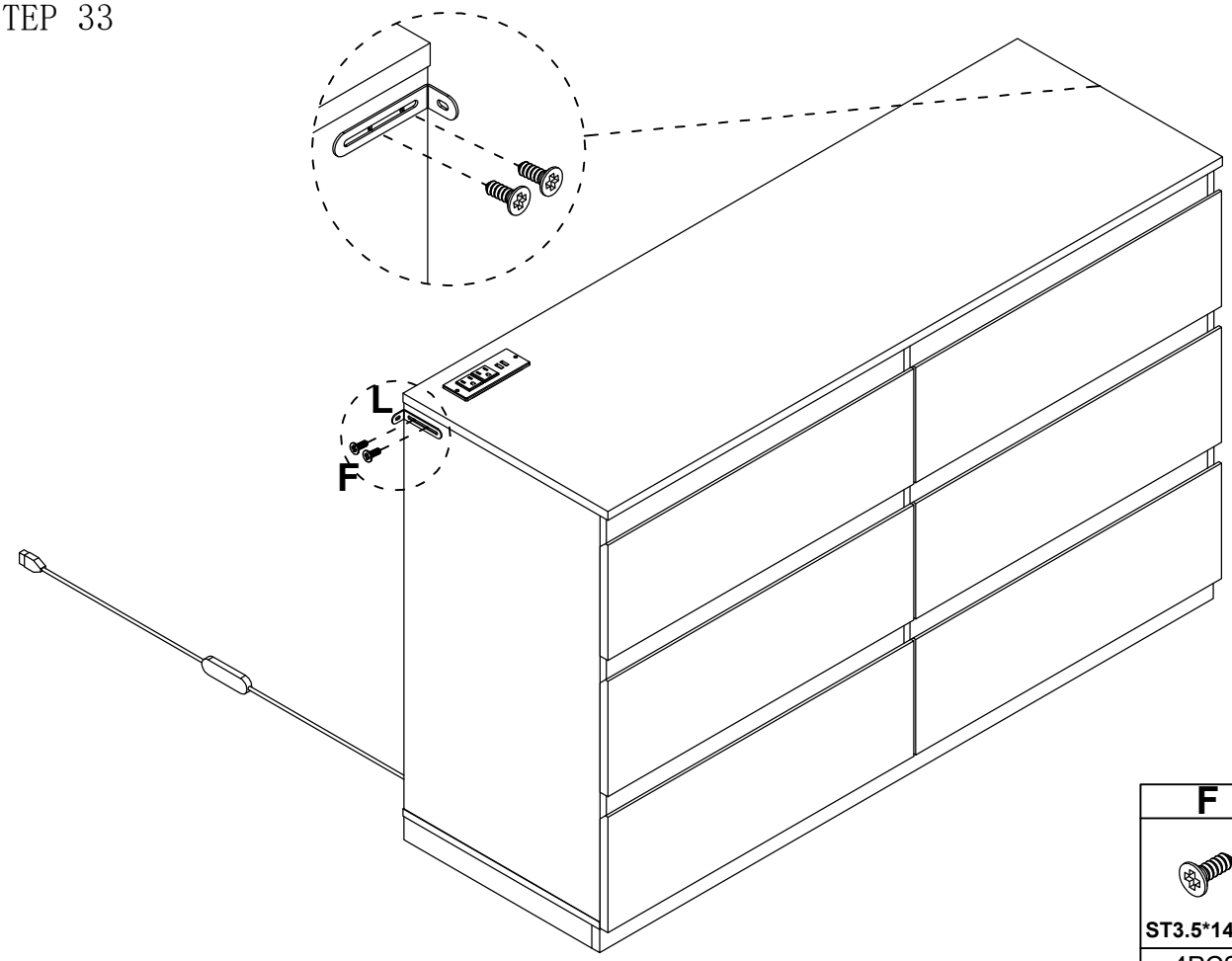

F	L
ST3.5*14mm	
4PCS	2PCS

STEP 34

WARNING

In order to prevent overturning this product must be used with the wall attachment device provided.

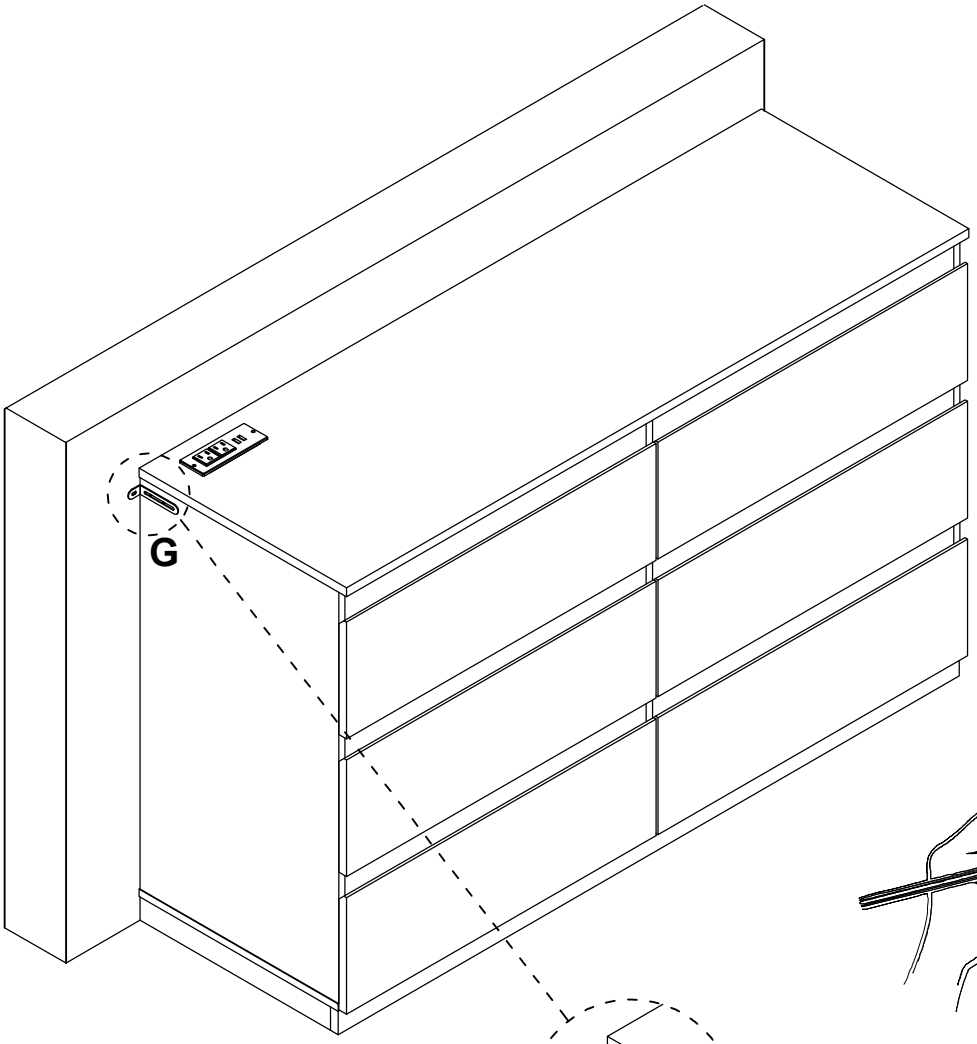

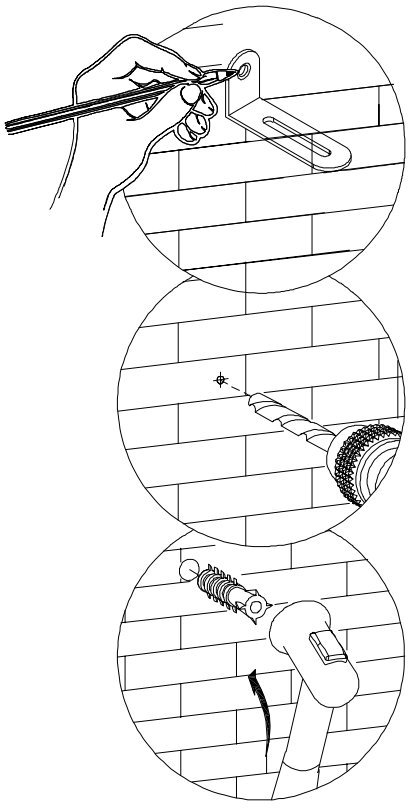

The furniture must be permanently fixed to the wall using the provided anti-tip device to prevent it from tipping over.
Mark the drilling positions on the wall with a pencil.
Drill a small hole at the marked position.
Insert the wall anchor into the hole.
Use the provided screws to fix the anti-tip belt to the wall.

G

2PCS