VANITII

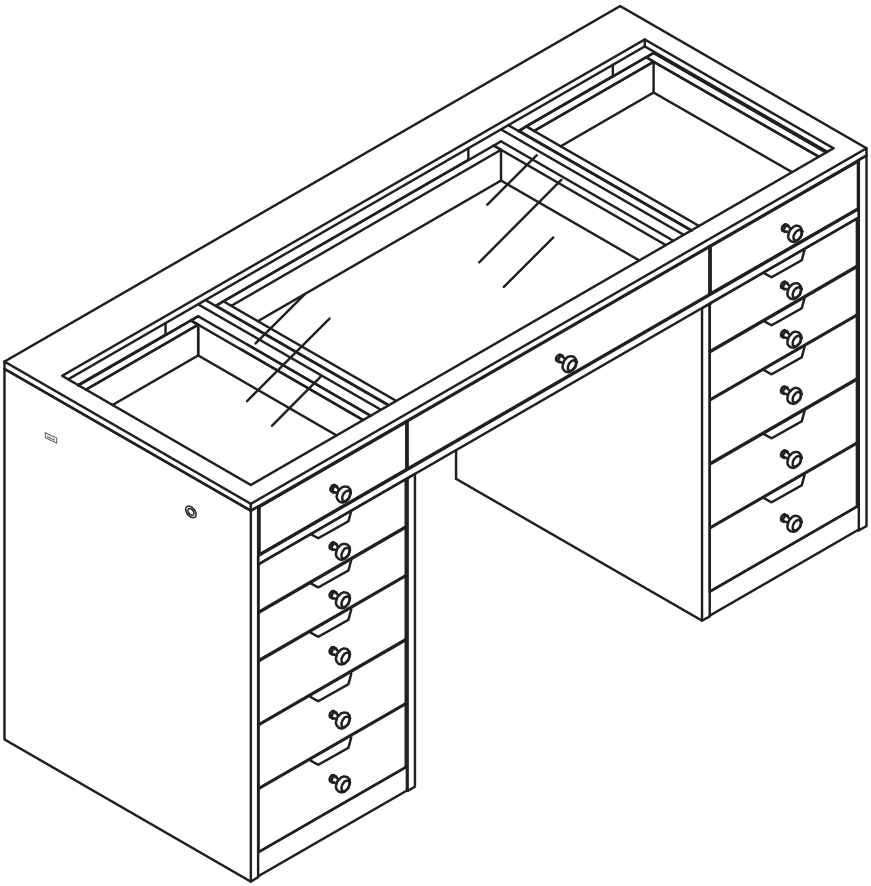

VANITII

Eva Vanity Desk

PLEASE READ THIS MANUAL THROUGHLY BEFORE USING THIS APPLIANCE

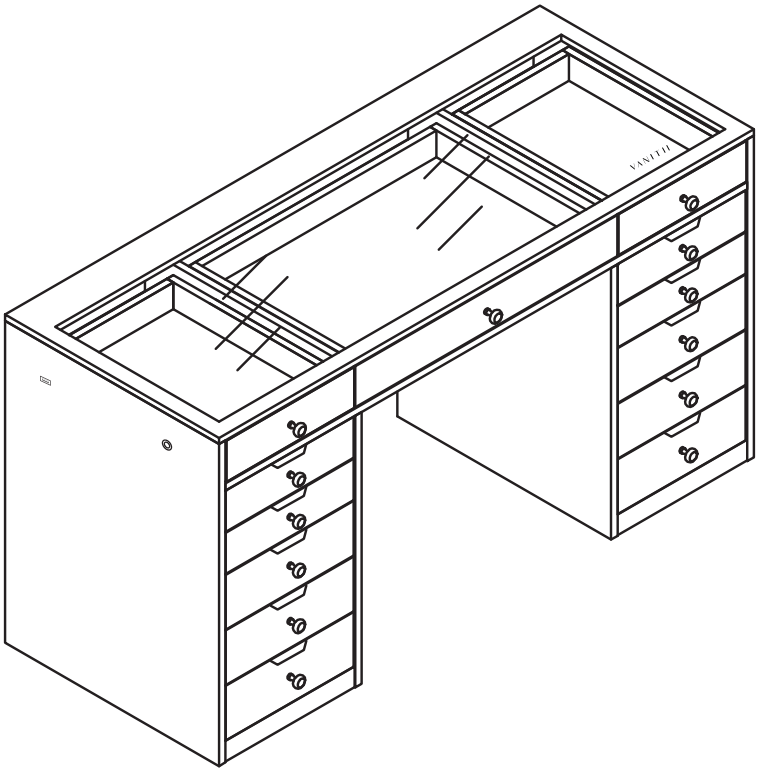

Dear Customer:

Thank you for allowing us in your glam room, please pay attention to the following points when installing:

1. Before installation, please spread carpet or fabrics like cotton or velvet on your floor to avoid damaging your floor and/or this product.

2. Only adults are allowed to install - please remove all children from the area

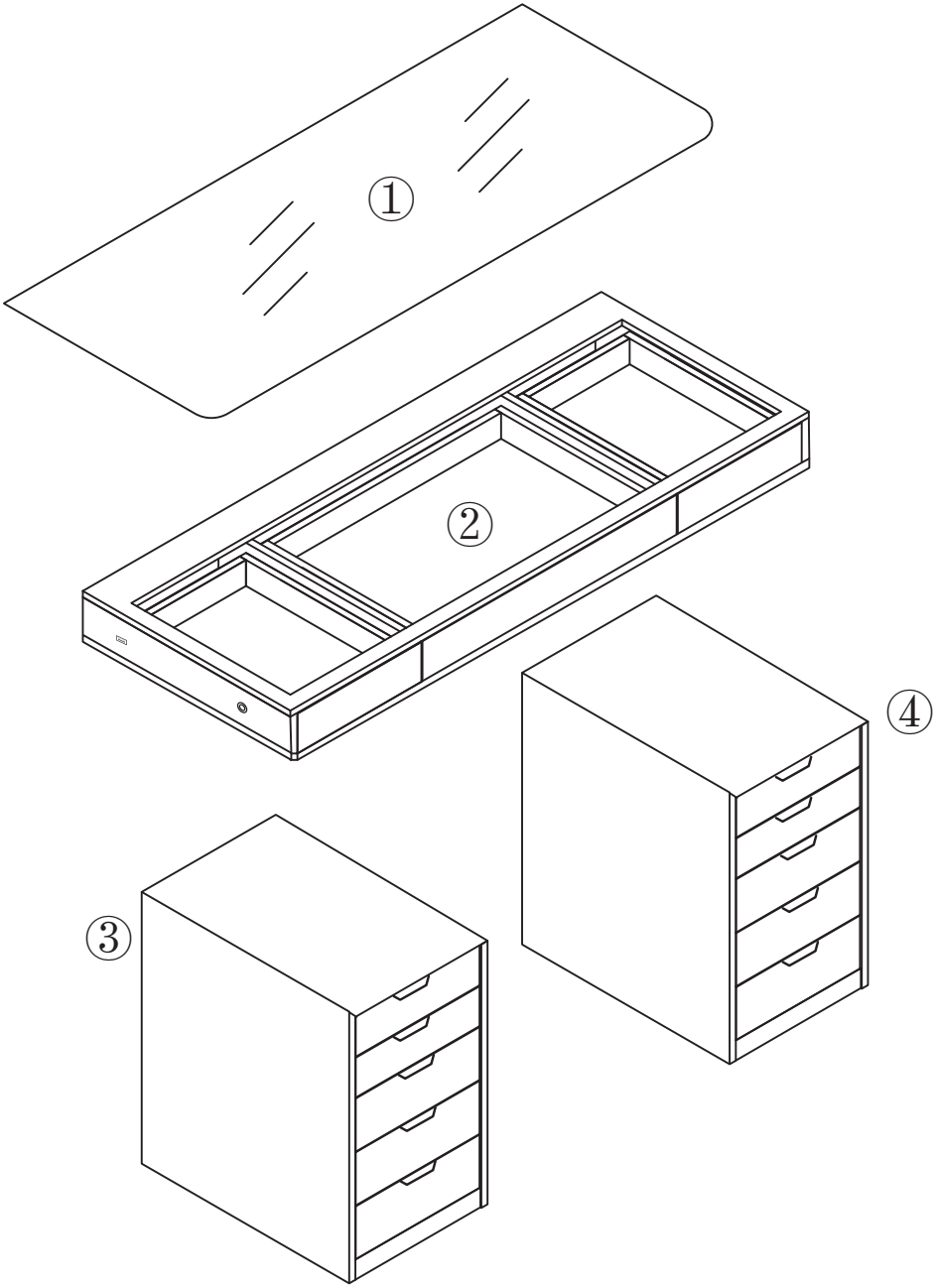
①
②
③
④

STEP 1.

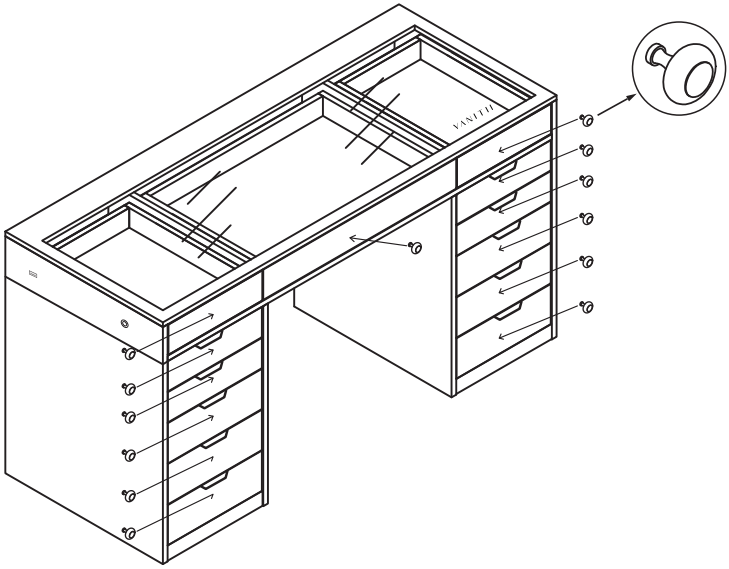

STEP 2.

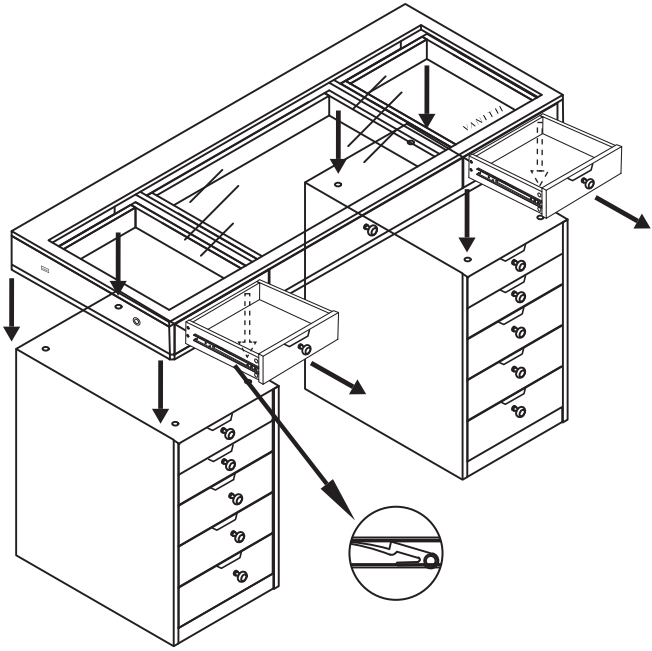



Screwdriver*1



6x25mm

Screw*8
+2 spare part included

STEP 3.

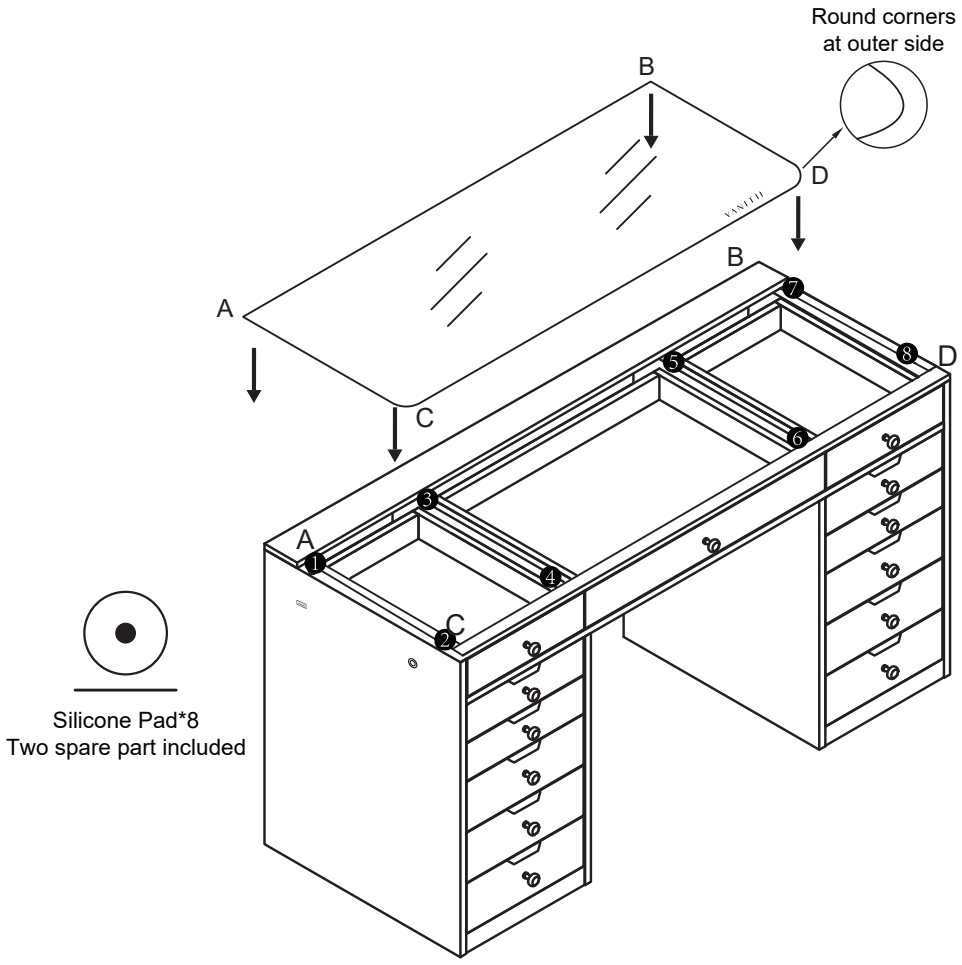
Round corners
at outer side
B
D
A
B
C
D
A
C
Silicone Pad*8
Two spare part included

Eva Vanity Desk

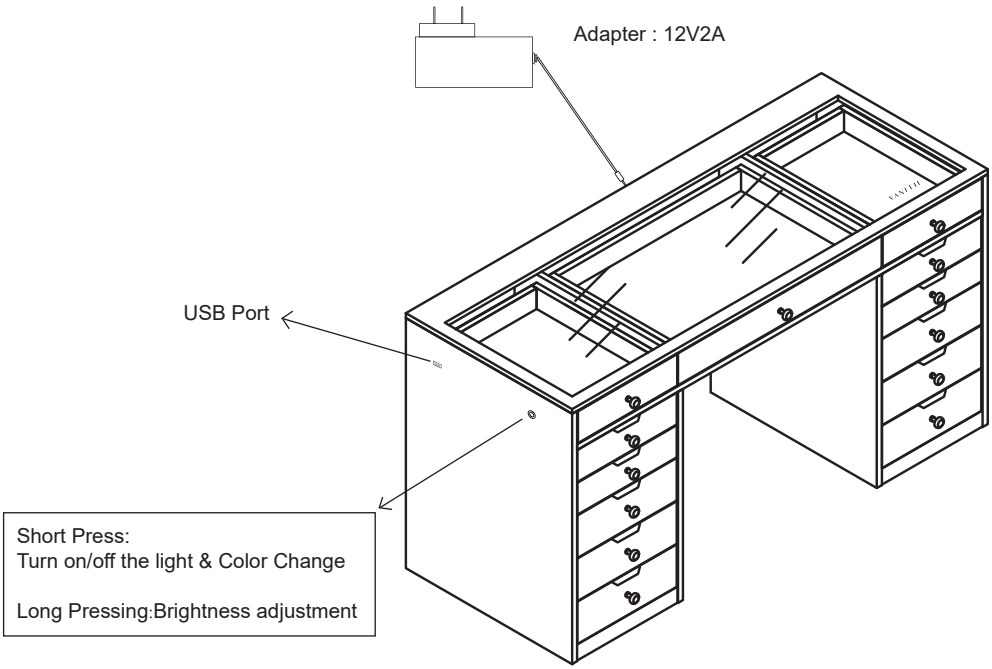

Eva Pro Vanity Desk

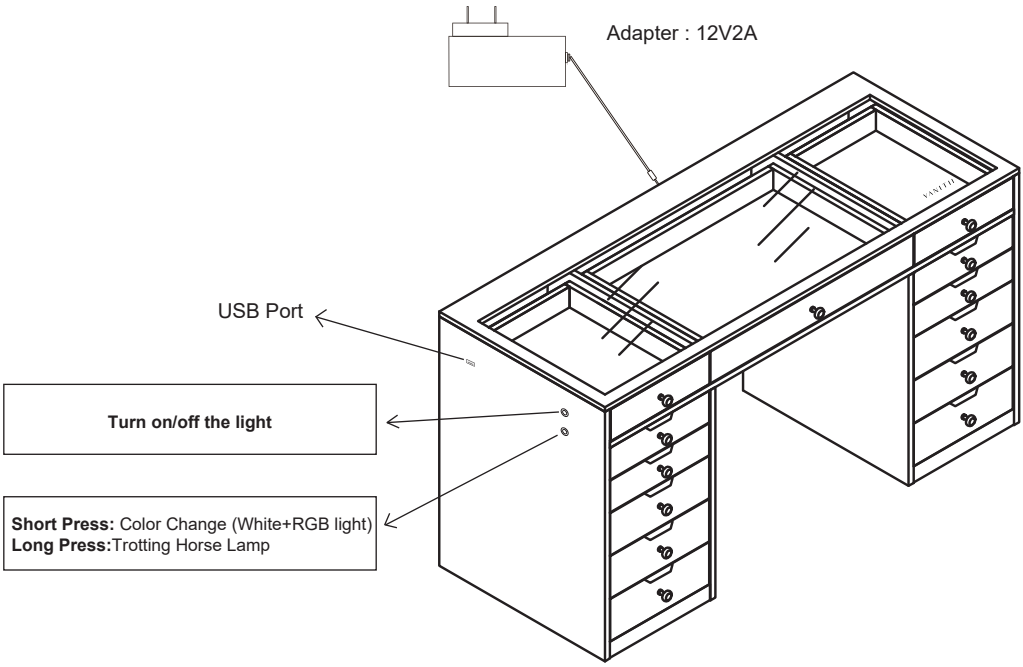

ACCESSORIES ITEMS

 Handle*14	 6x25mm Screw*10	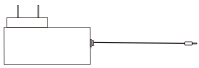 Adapter*1
 Screwdriver*1	 Silicone Pad*10 (Only For Matte White Item)	



HANDLE WITH CARE.

Gently unpack all parts to avoid damage.

When assembling, ensure all screws are fully tightened before use.