ASSEMBLY INSTRUCTION

ITEM NUMBER:226
SIZE: King

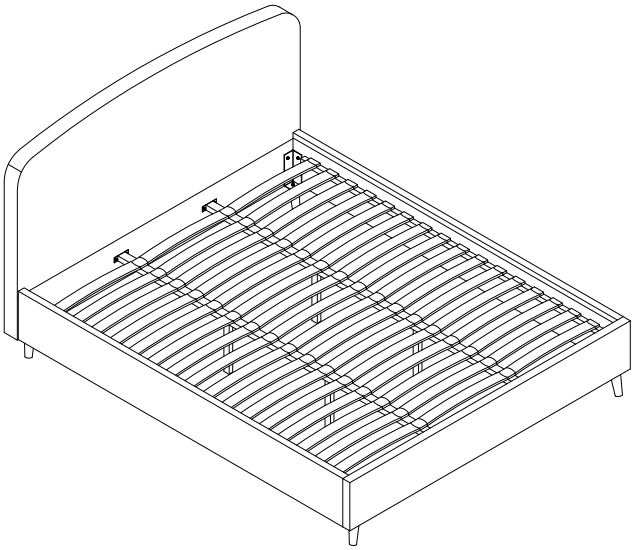



Please TEAR OFF this shrink film from side!
DO NOT USE CUTTER!

IMPORTANT NOTE

1. For the protection of your furniture, place all parts on a clean and smooth surface to prevent any damage.
2. Keep fittings out of children's reach and keep children well away from construction area.
3. When moving your assembled bed. it is best to lift the bed and never to drag it.
4. Do not use this product if parts are missing, damaged or worn.
5. This product should only be used on firm, level ground.
6. Please periodically check all fittings and re-tighten as necessary.
7. Do not use the bed unless all bolts and screws are firmly secured.
8. For further assistance, please provide a screenshot of your order and contact us via email at kjbed@outlook.com

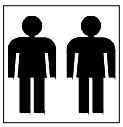

Minimum two person assembly

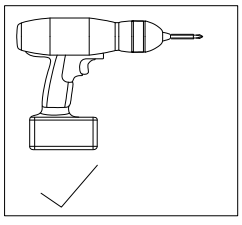

PART LIST

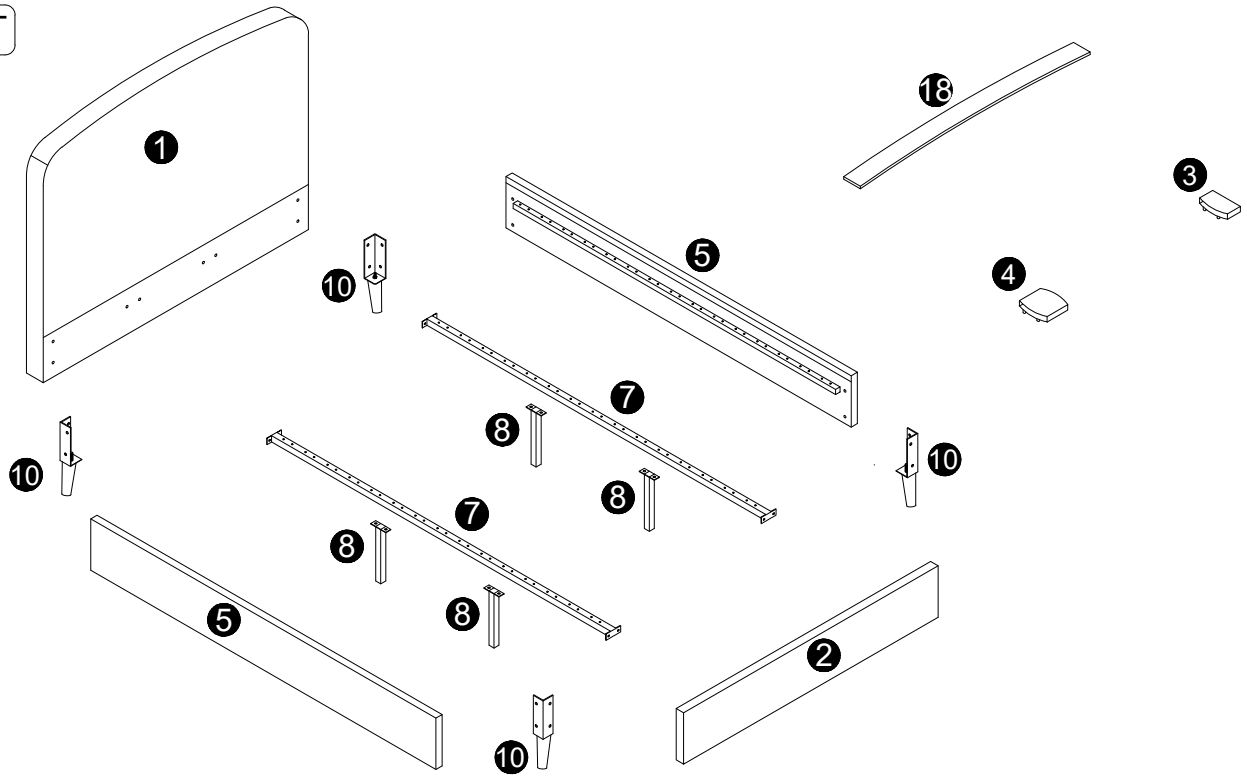

Components of Carton A

1 x 1pc

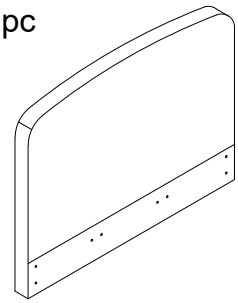

Components of Carton B

2 x 1pc

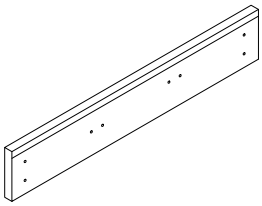

3 x 32pcs

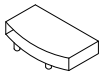

4 x 32pcs

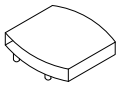

5 x 2pcs

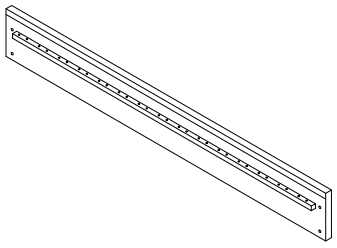

7 x 2pcs

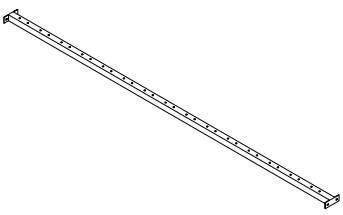

8 x 4pcs

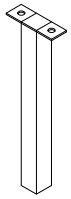

10 x 4pcs

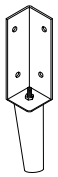

18 x 48pcs

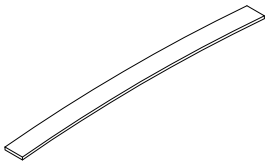

Please ensure to thoroughly inspect the small inner cardboard box containing the hardware, which are tied with a red string, before disposing of the box.

HARDWARE LIST

Components of Carton B

 H1 M5 x 1pc	 H2 M8x25mm x32pcs	 H5 M8 x 16pcs	 H6 M8x22mm x 16pcs

1

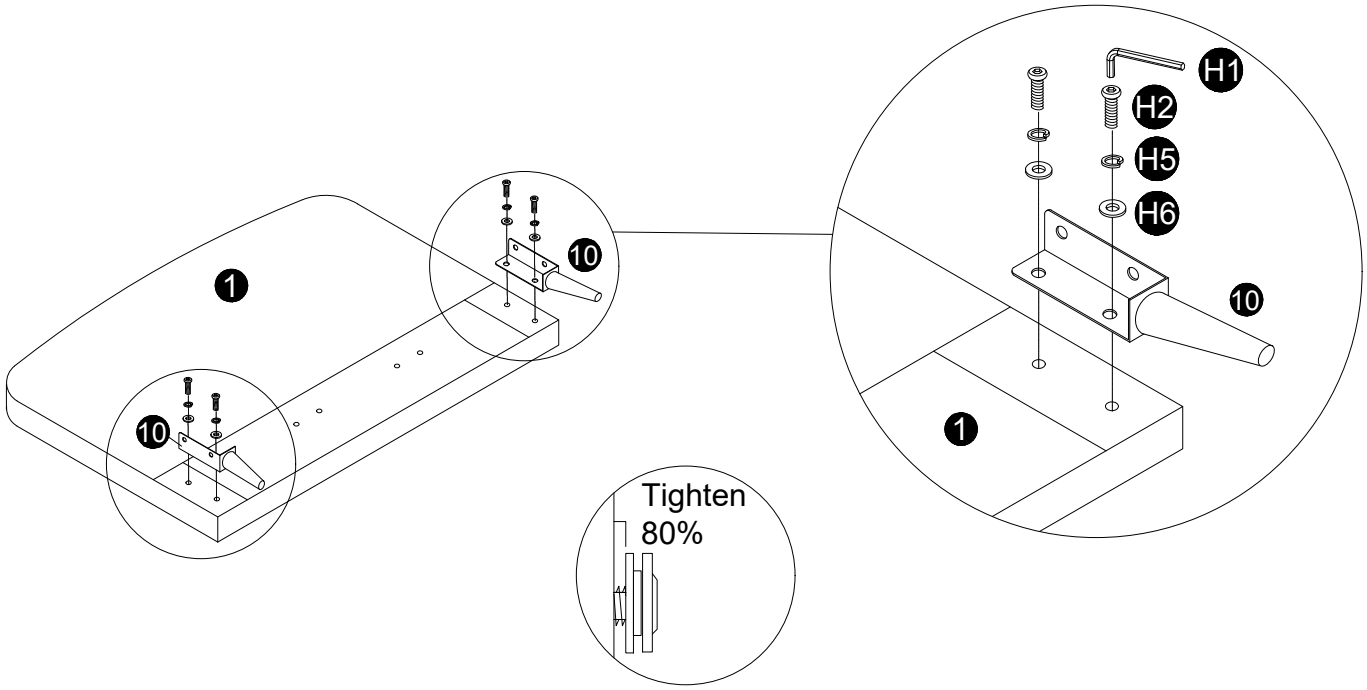

2

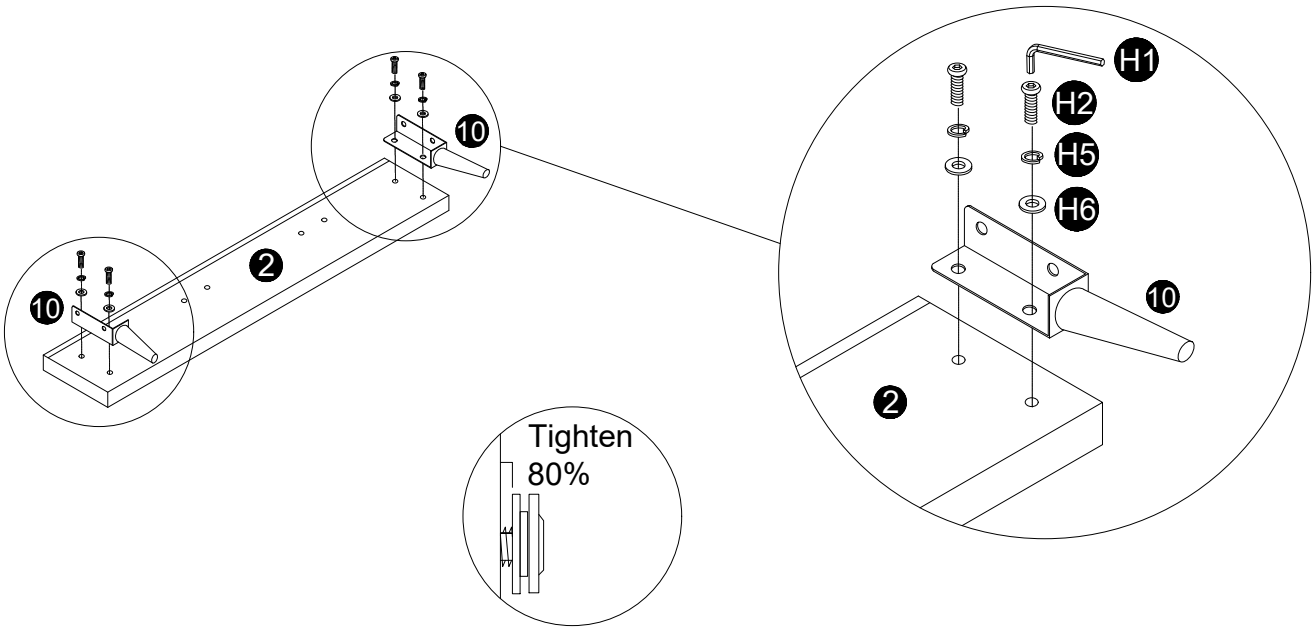

3

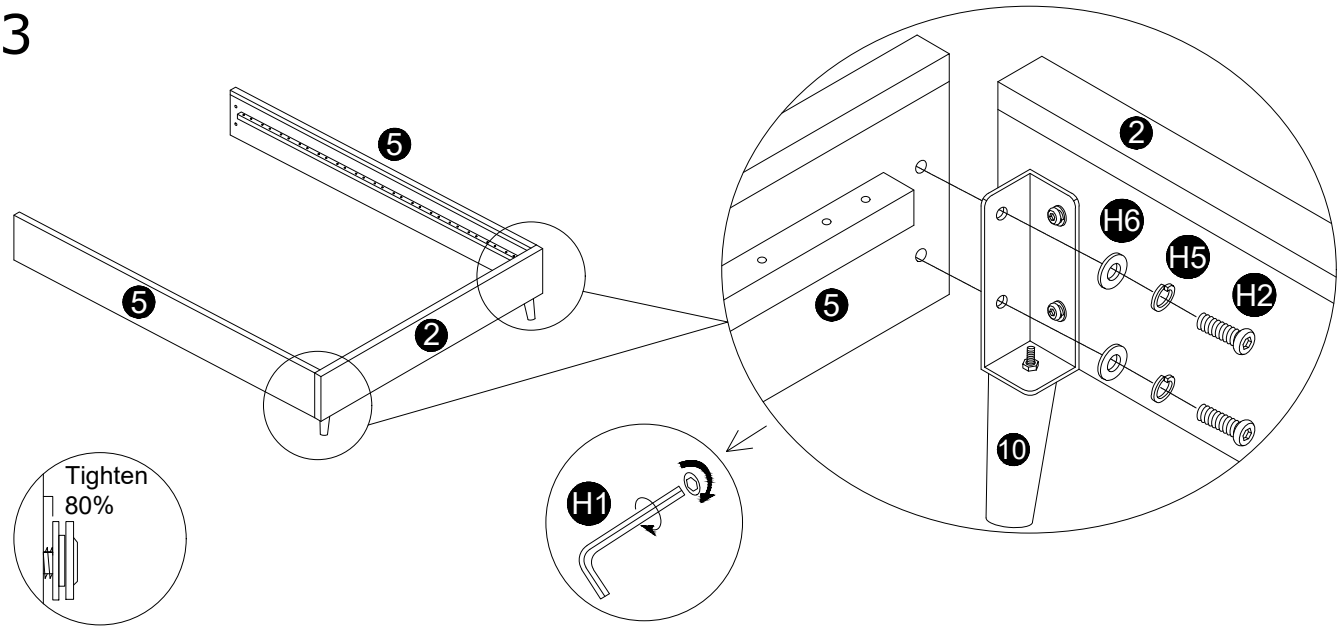

4

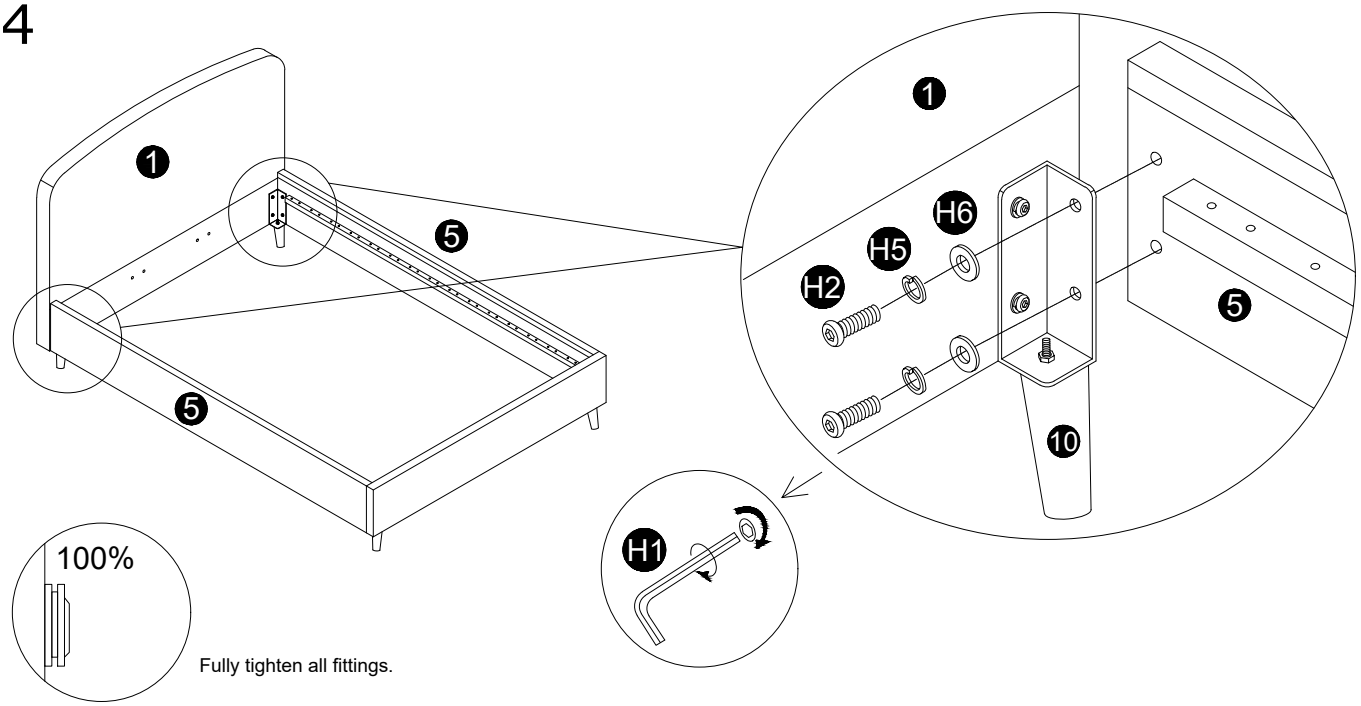

Fully tighten all fittings.

5

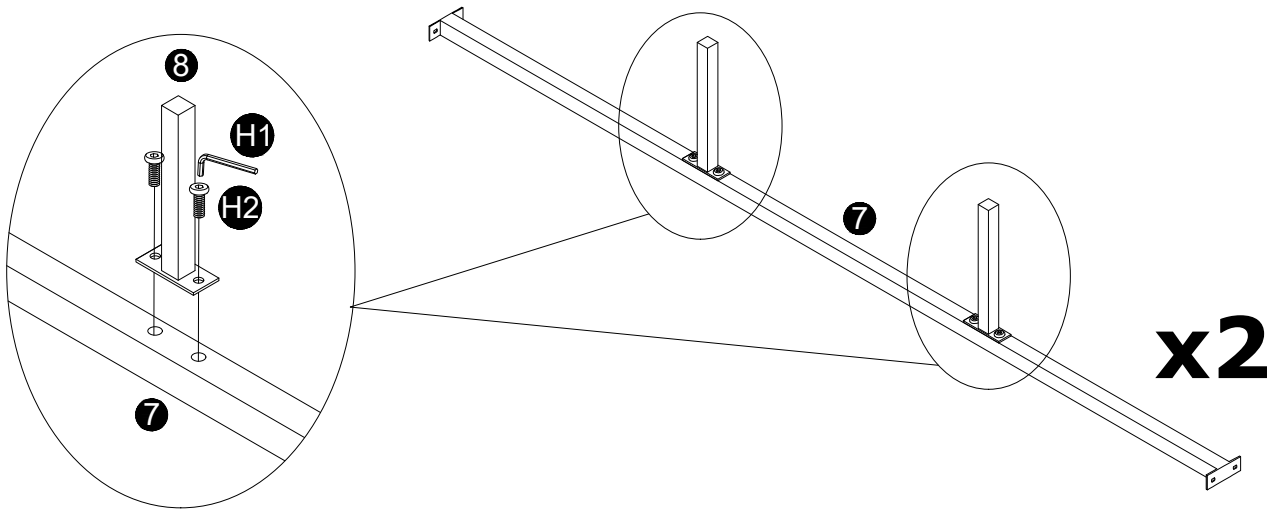

6

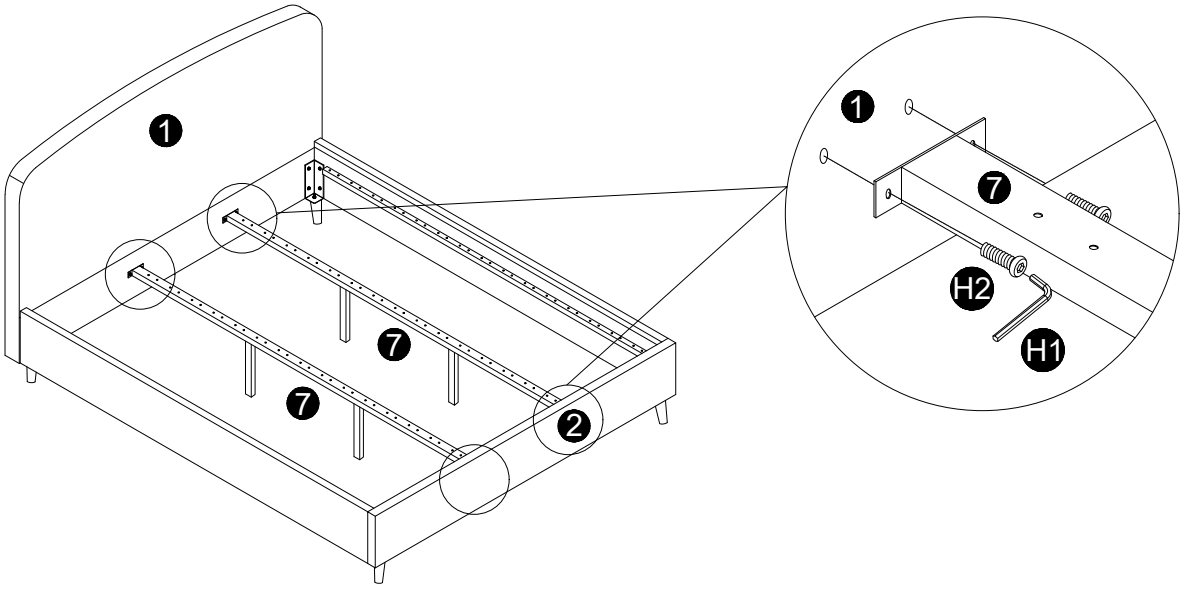

7

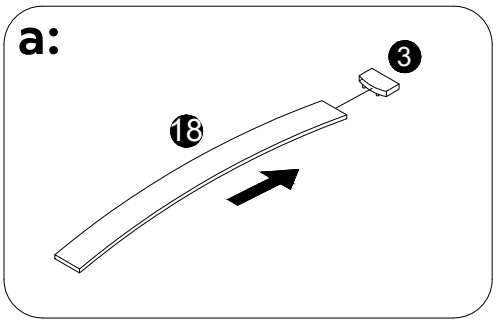

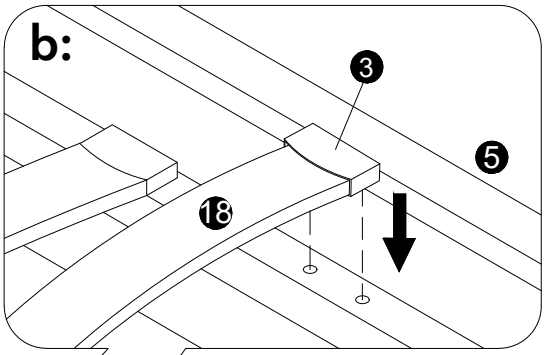

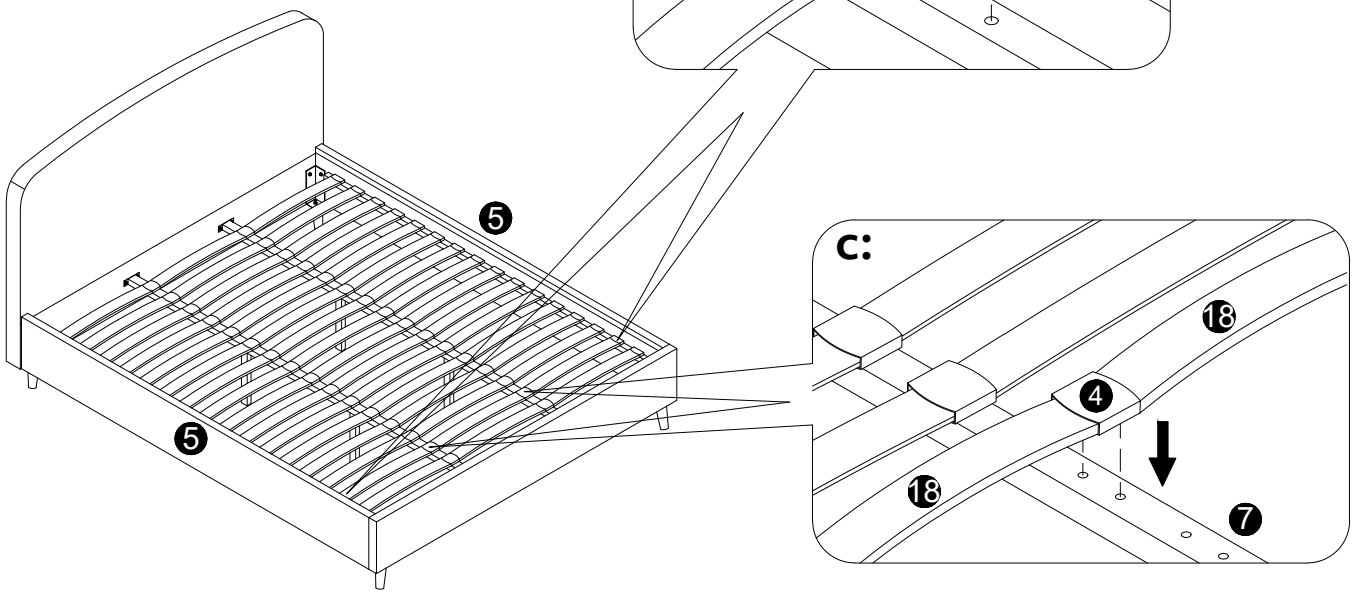

Job Complete !

In the interest of our environment please dispose of all packaging thoughtfully.