Thank You For Your Purchase

We hope that this product will help make your home beautiful.

We strive to provide great customer service and want to make sure you are completely satisfied. If you have any questions or comments, we'd love to hear from you! please be free to email us :

support@Jindoli.com

Thanks again for shopping with us!

Product Installation Instructions

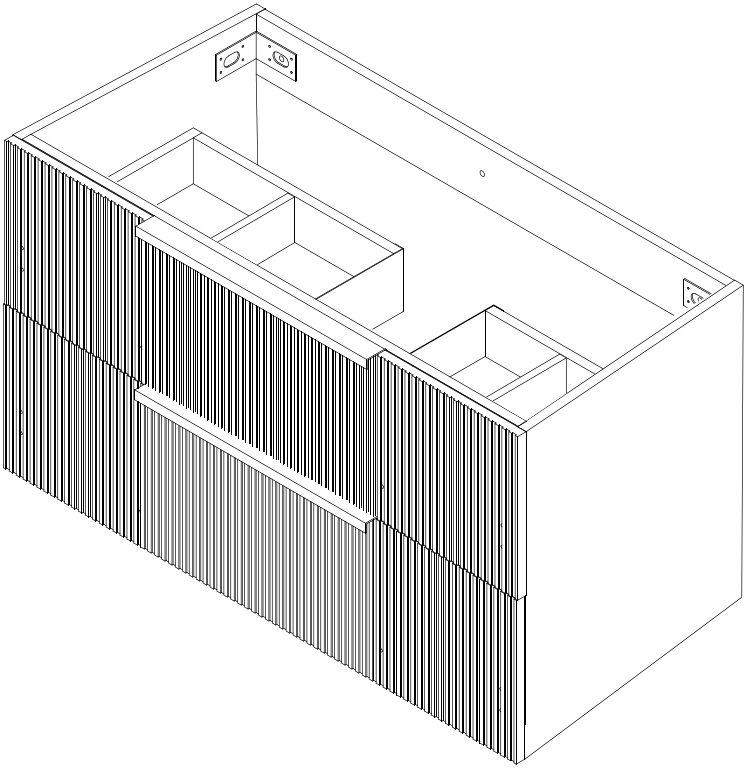

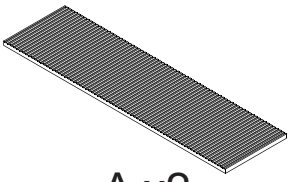

A x2

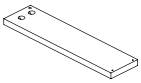

B1x1

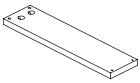

B2x1

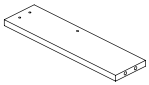

Cx2

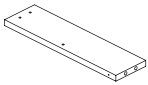

Dx2

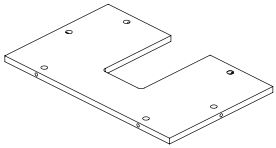

E x1

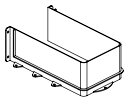

F x1

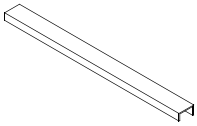

G x2

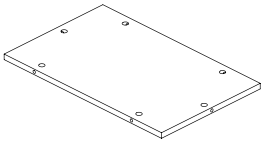

H x1

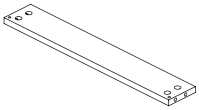

I x1

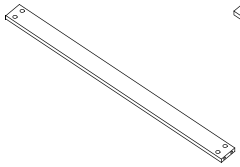

J x2

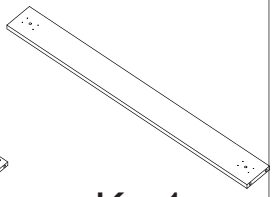

K x1

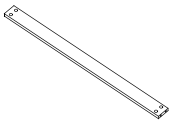

L x2

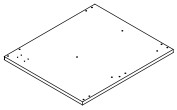

Mx1

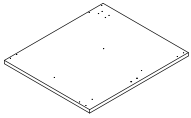

N x1

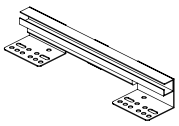

O x4

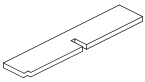

Px2

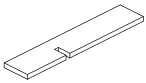

Qx2

① 	48pcs +2pcs	② 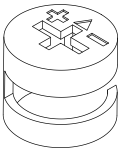	48pcs +2pcs
Two in one nut(10x12mm)		Wood chipping(8x30mm)	
③ 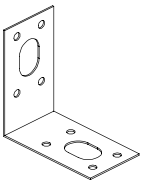	2pcs	④ 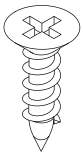	31pcs +3pcs
⑤ 	2pcs	⑥ 	2pcs
Wood chipping(4x14mm)			
⑦ 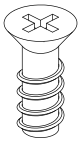	8pcs	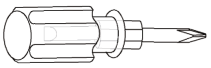	1pcs

Product structure decomposition

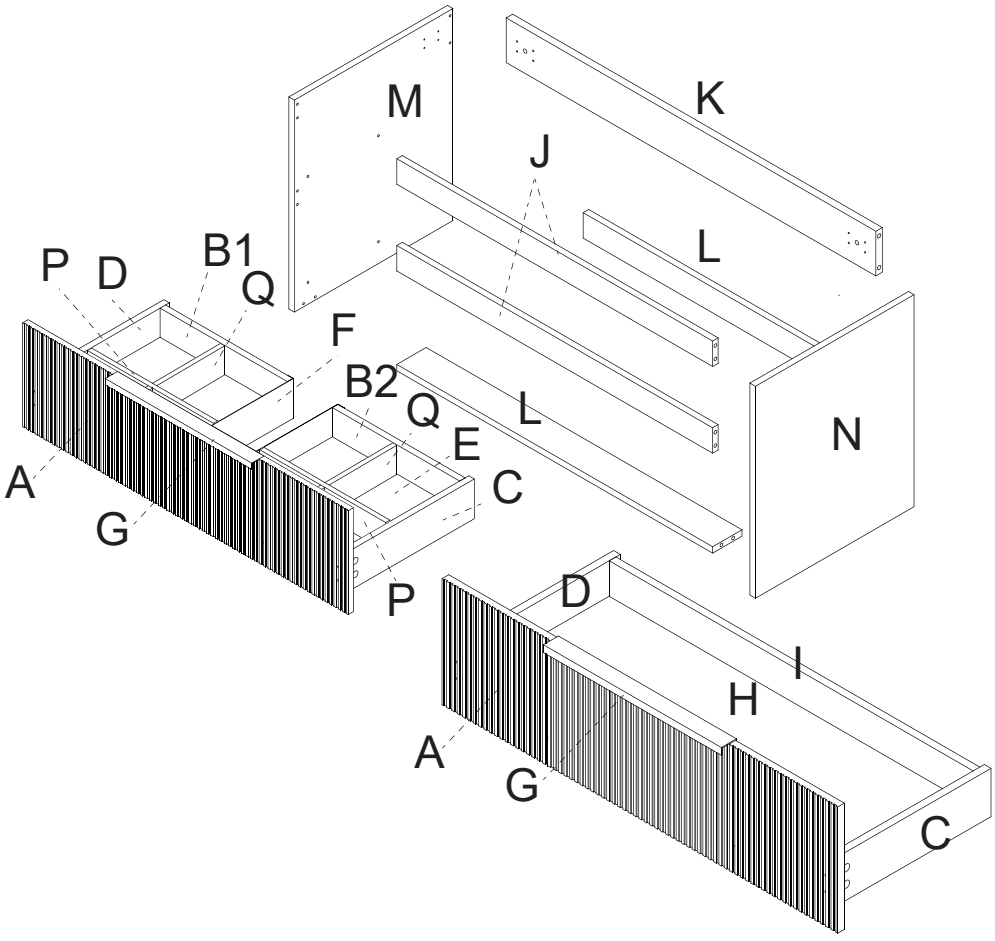

① 	14pcs	② 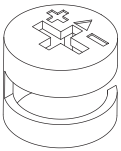	14pcs
Two in one screw(6x28mm)		Two in one nut(10x12mm)	
④ 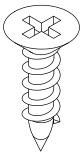	13pcs		
Wood chipping(8x30mm)			

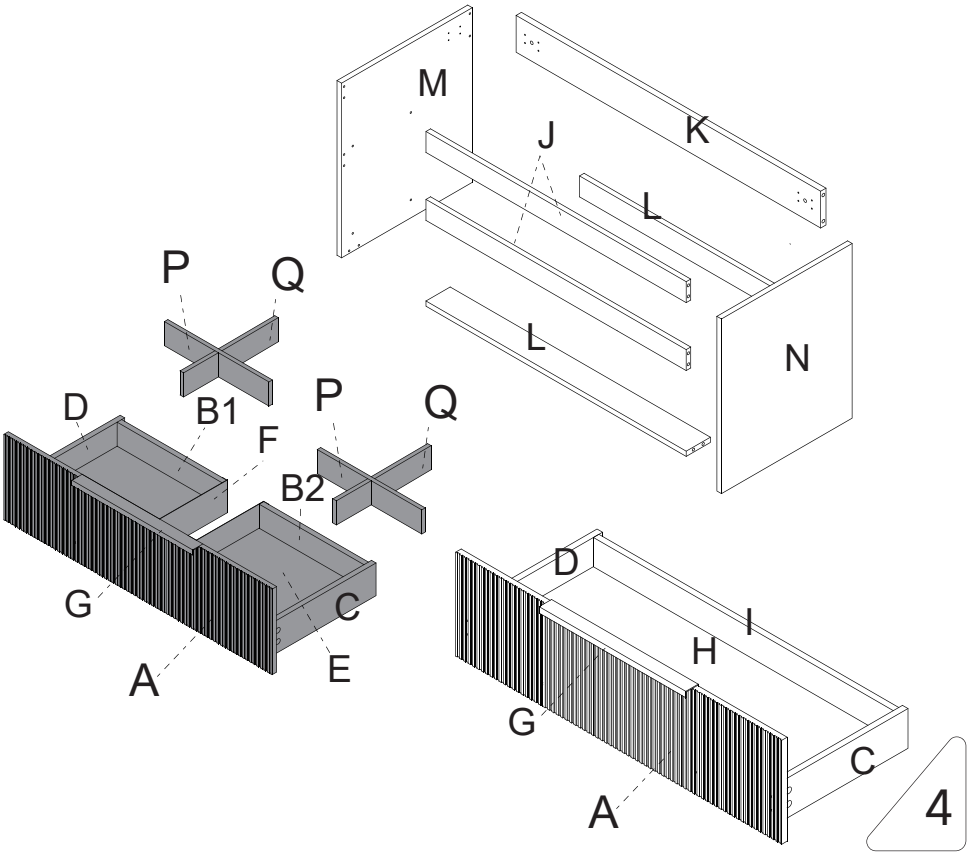

Use parts ① and ②

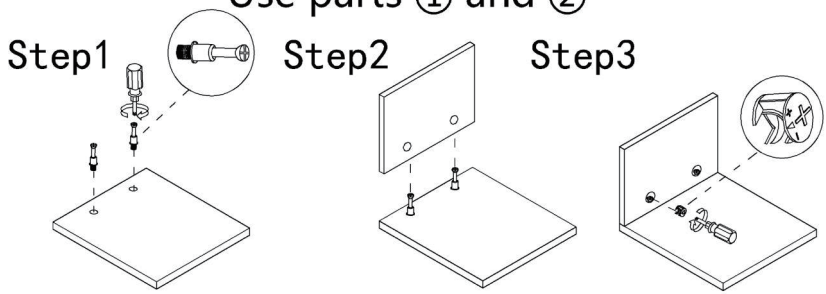

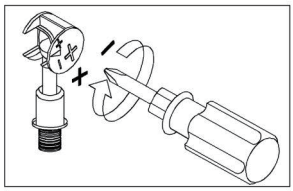

Use a screwdriver to lock in the direction of the "+" sign

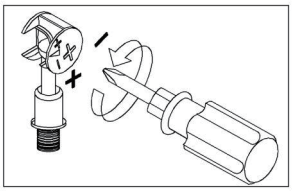

Disassemble along the direction of "-" sign

①  x8

Step 01

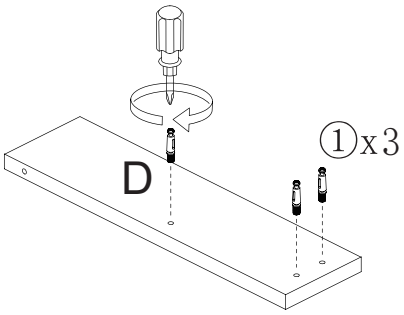

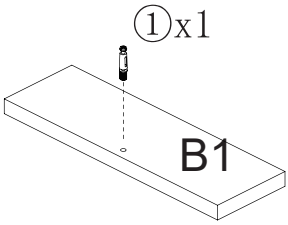

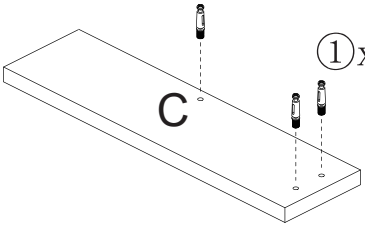

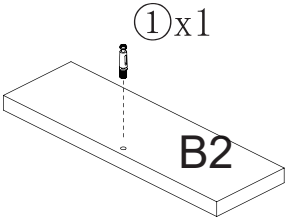

Step 02

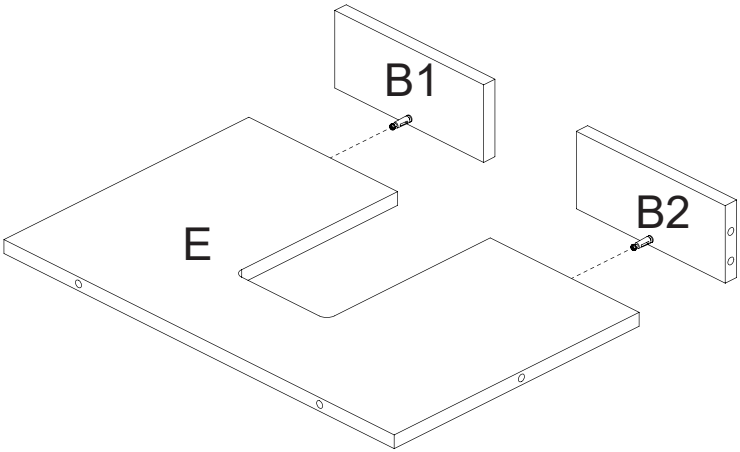

Step 03

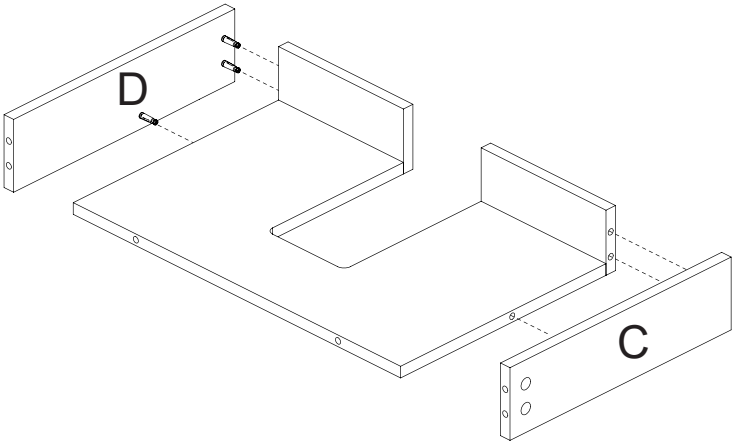

Step 04

② x8

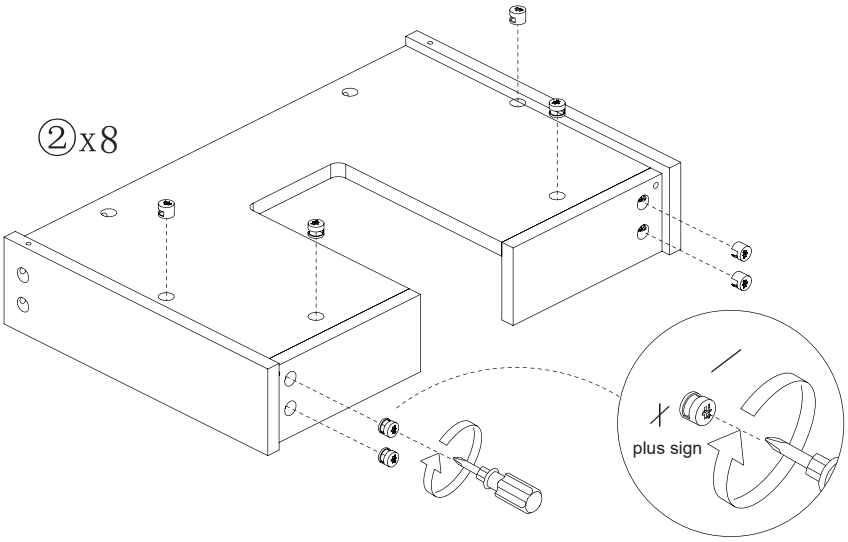

Twist in the direction of the plus sign

Step 05

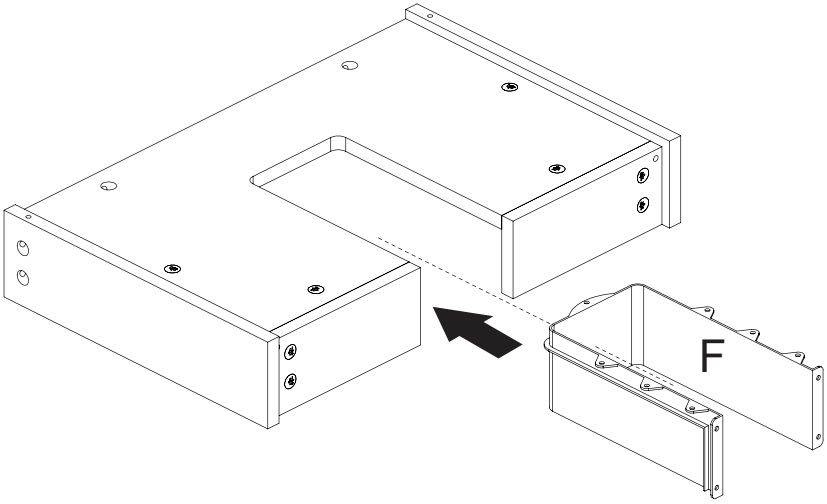

Step 07

④  x11

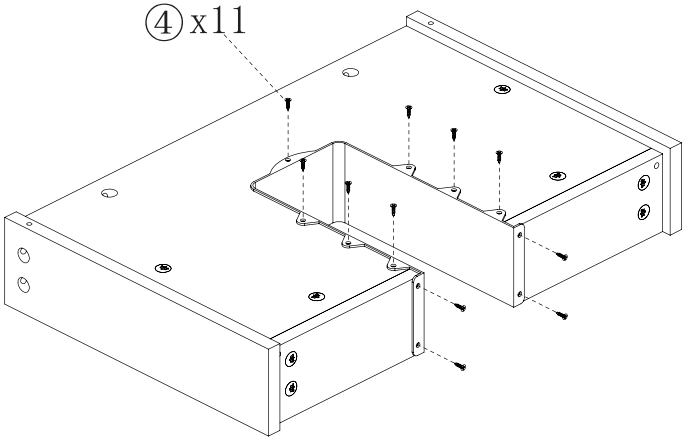

Step 08

①  x6

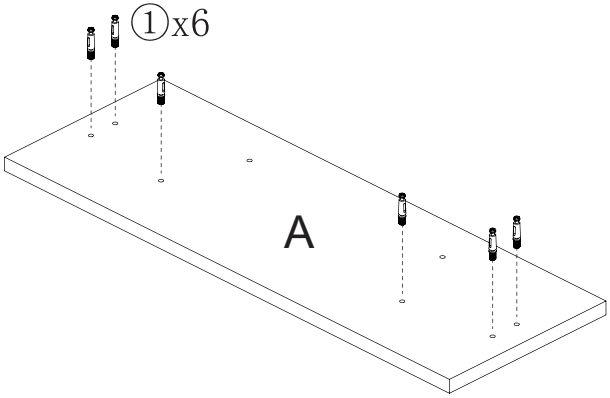

Step 09

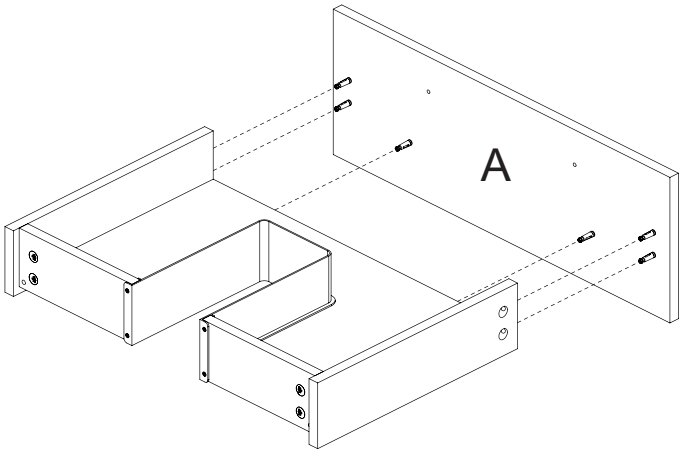

Step 10

②  x6

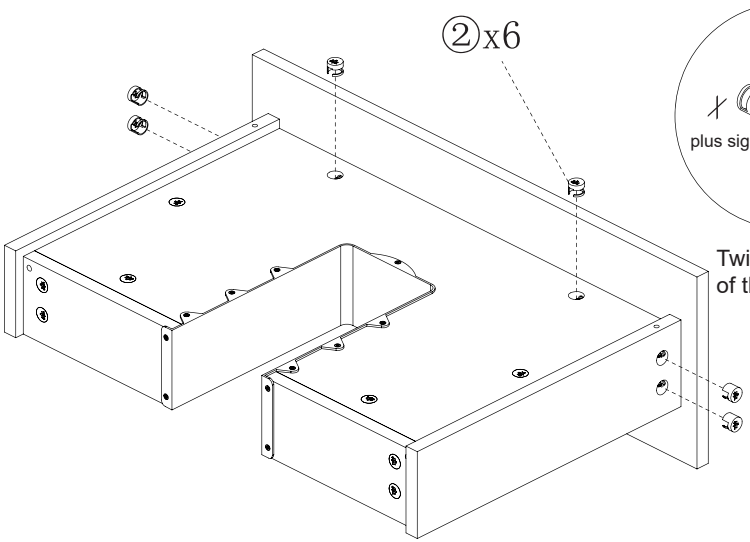

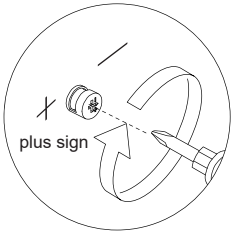

Twist in the direction of the plus sign

Step 11

④ x2

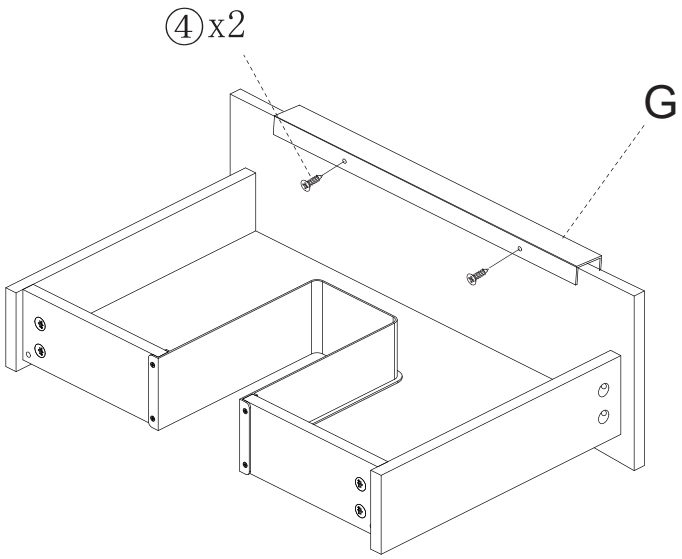

Step 12

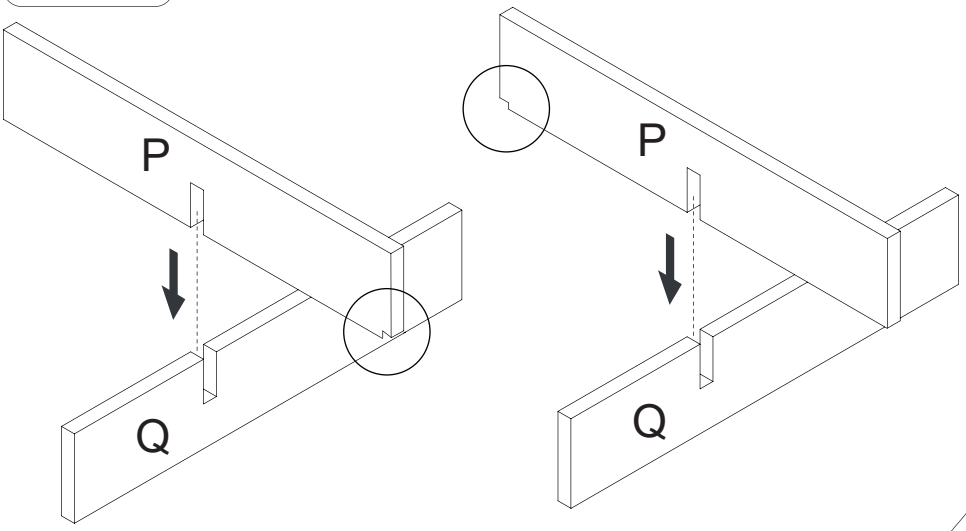

Step 13

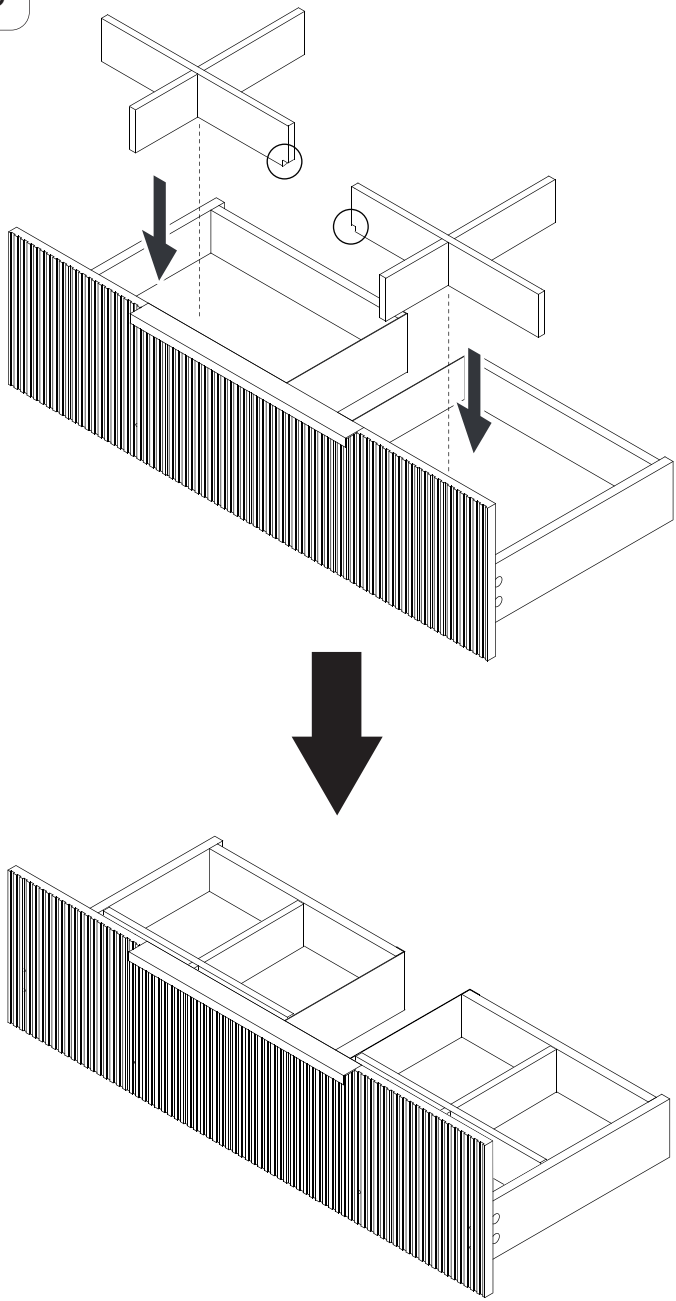

① 	14pcs	② 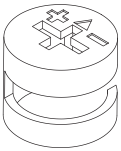	14pcs
Two in one screw(6x28mm)		Two in one nut(10x12mm)	
④ 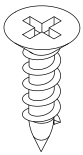	2pcs		
Wood chipping(4x14mm)			

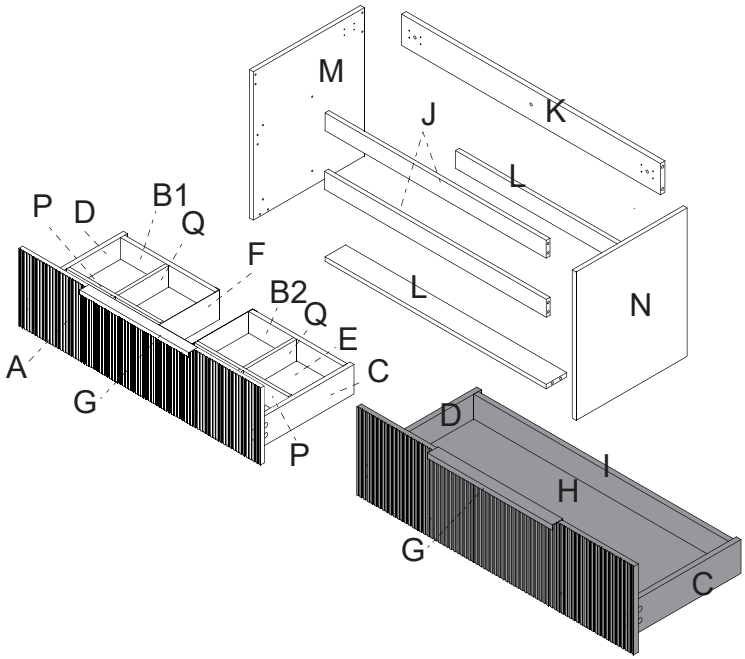

Step 14

① x8

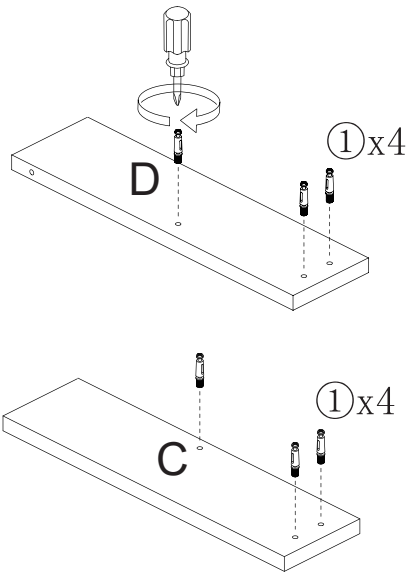

Step 15

② x2

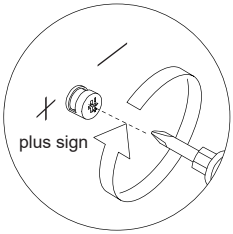

Twist in the direction of the plus sign

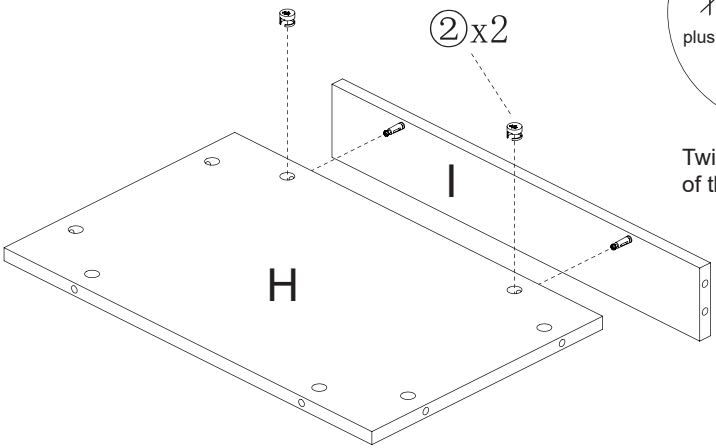

Step 16

② x6

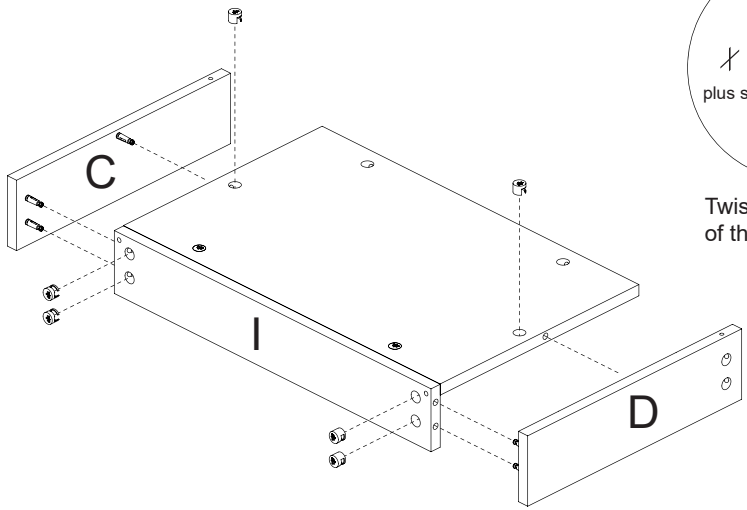

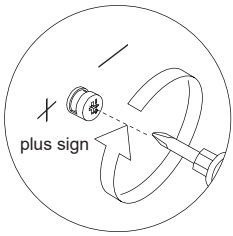

Twist in the direction of the plus sign

②  x6

Step 17

①x6

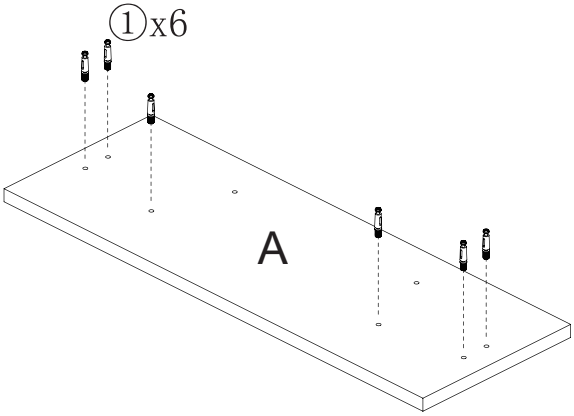

①  x6

Step 18

② x6

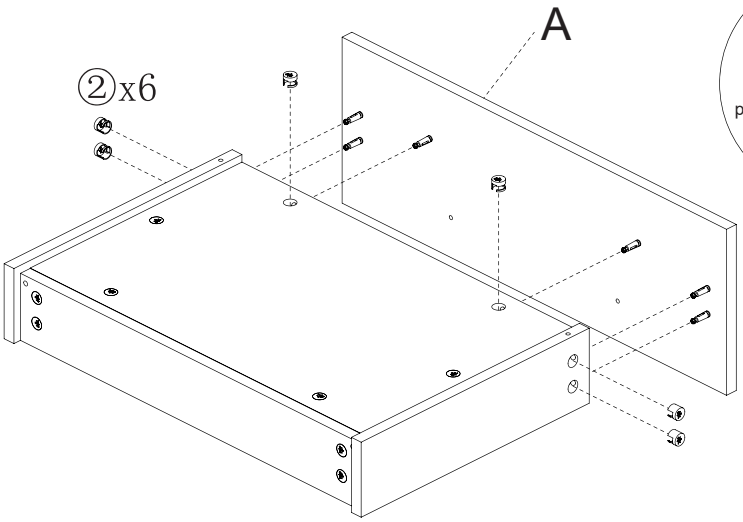

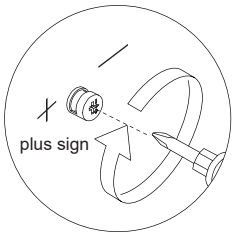

Twist in the direction of the plus sign

Step 19

④ x2

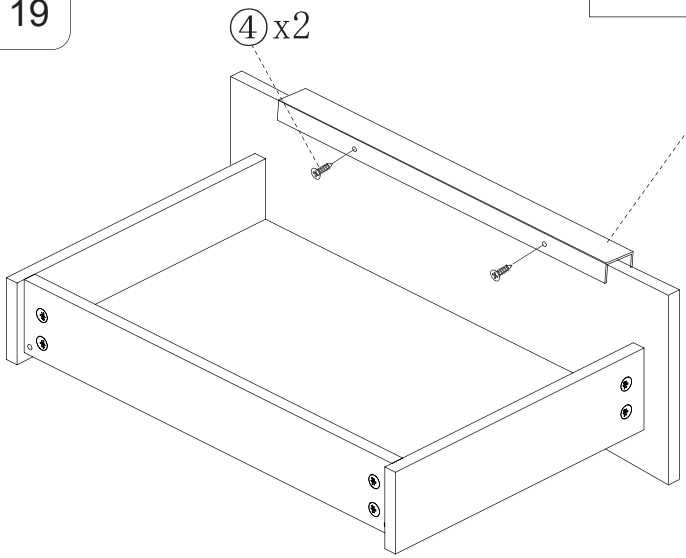

① 	20pcs	② 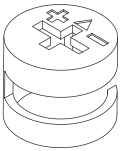	20pcs
Two in one nut(10x12mm)		Wood chipping(8x30mm)	
③ 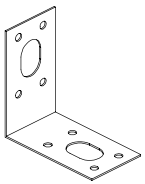	2pcs	④ 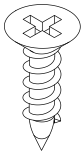	16pcs
Wood chipping(8x30mm)			
⑦ 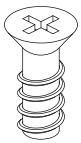	8pcs		

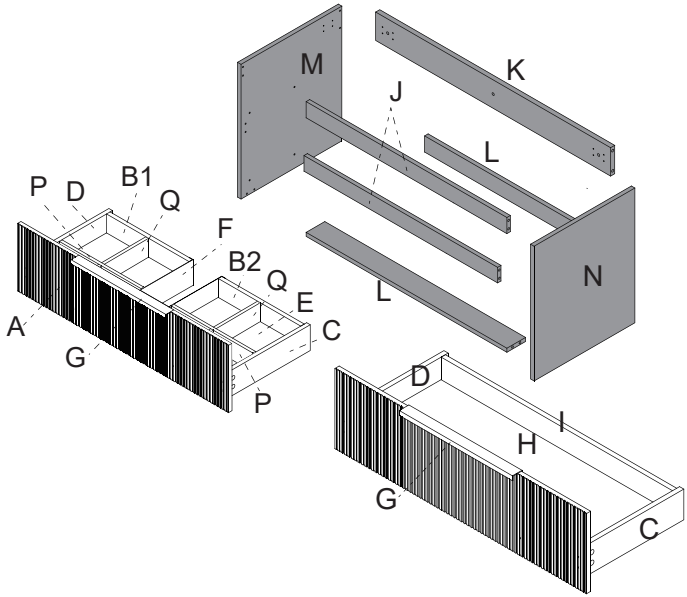

Step 20

① x20

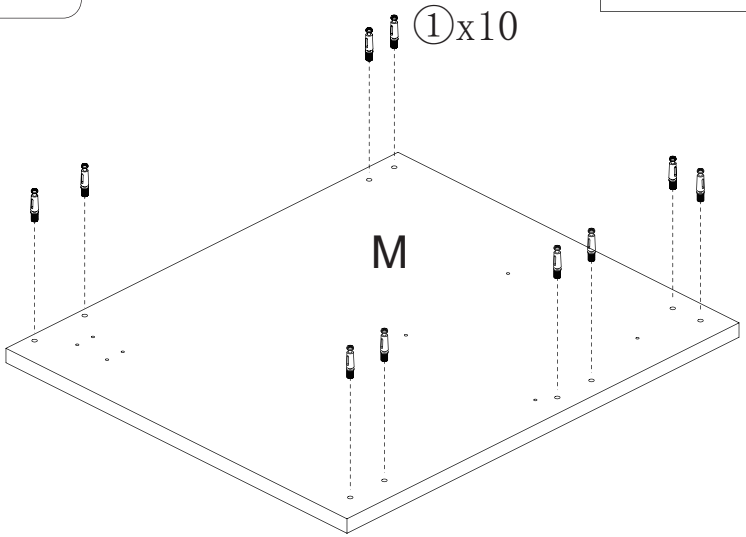

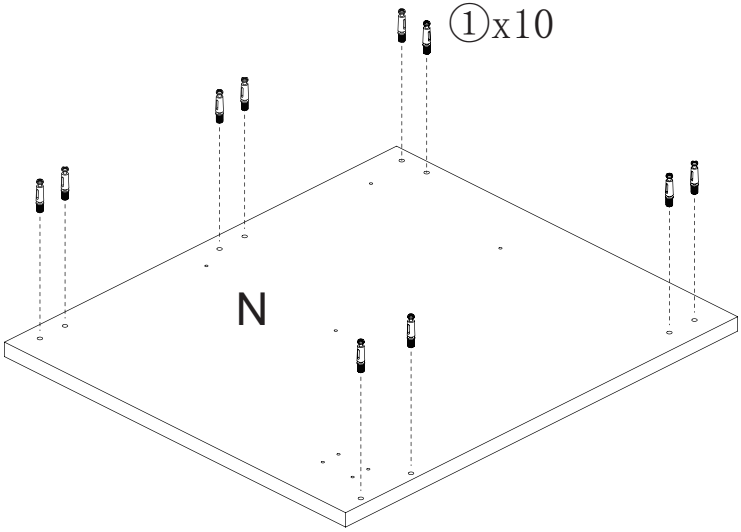

Step 21

⑦ x8

Third grid on the left

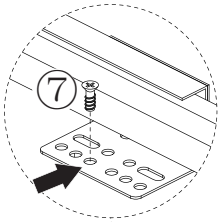

Note the "O" orientation

Third grid on the left

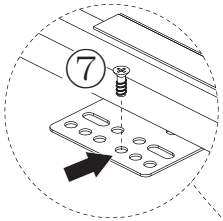

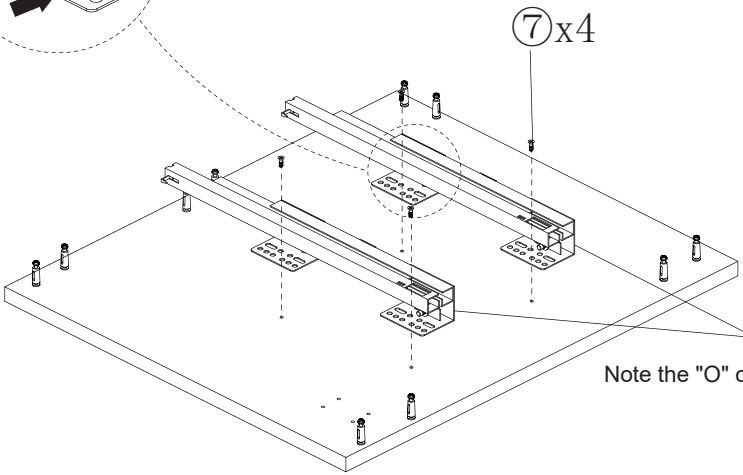

Note the "O" orientation

Step 22

② x2

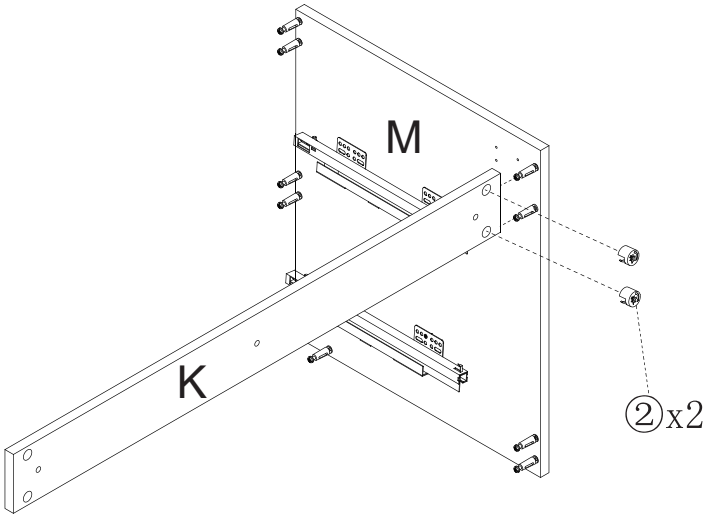

Step 23

② x2

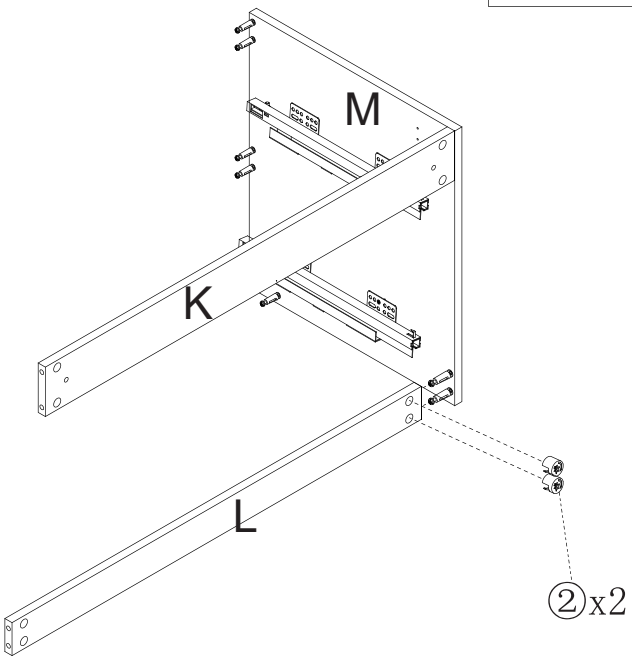

Step 24

② x4

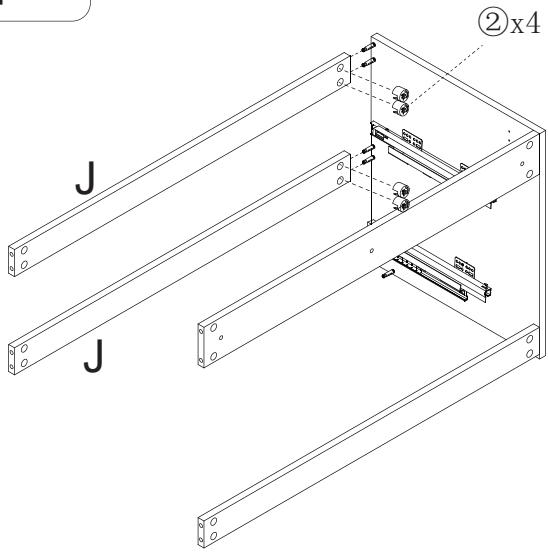

Step 25

② x2

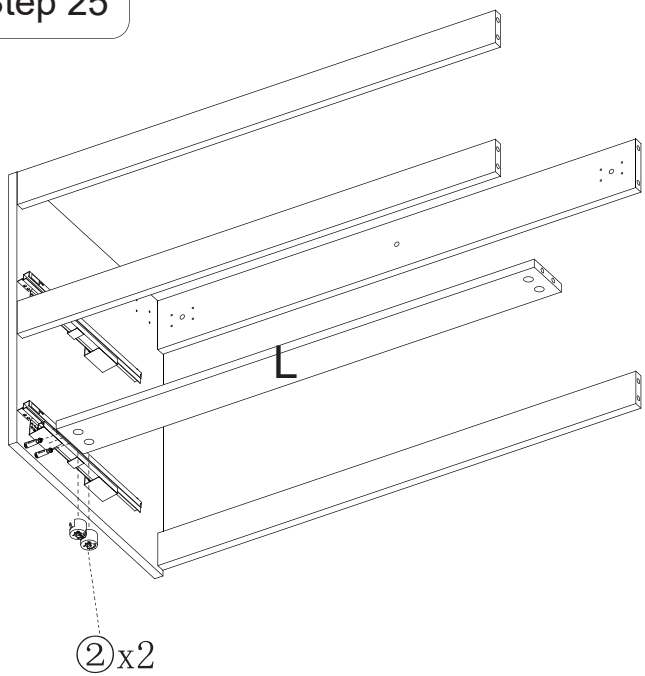

Step 26

② x10

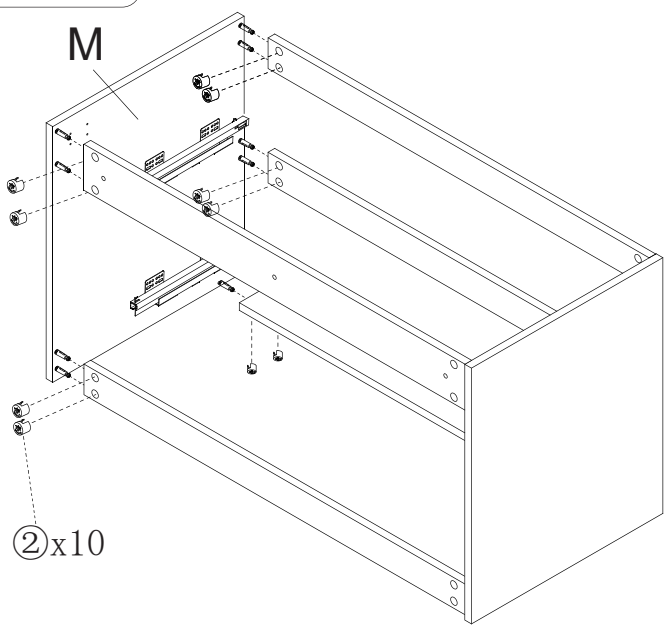

Step 27

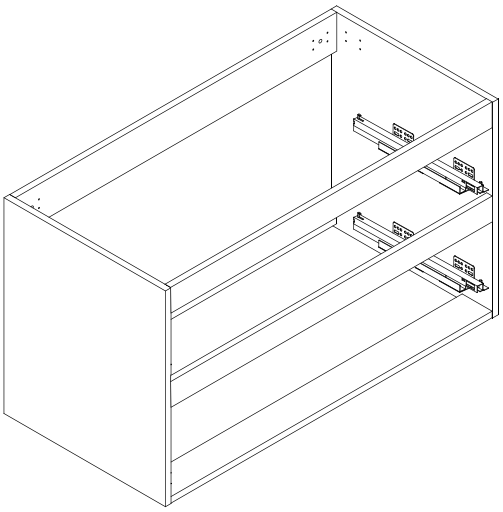

Step 28

④		x16
③		x2

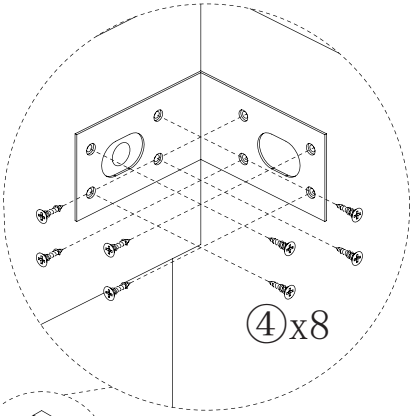

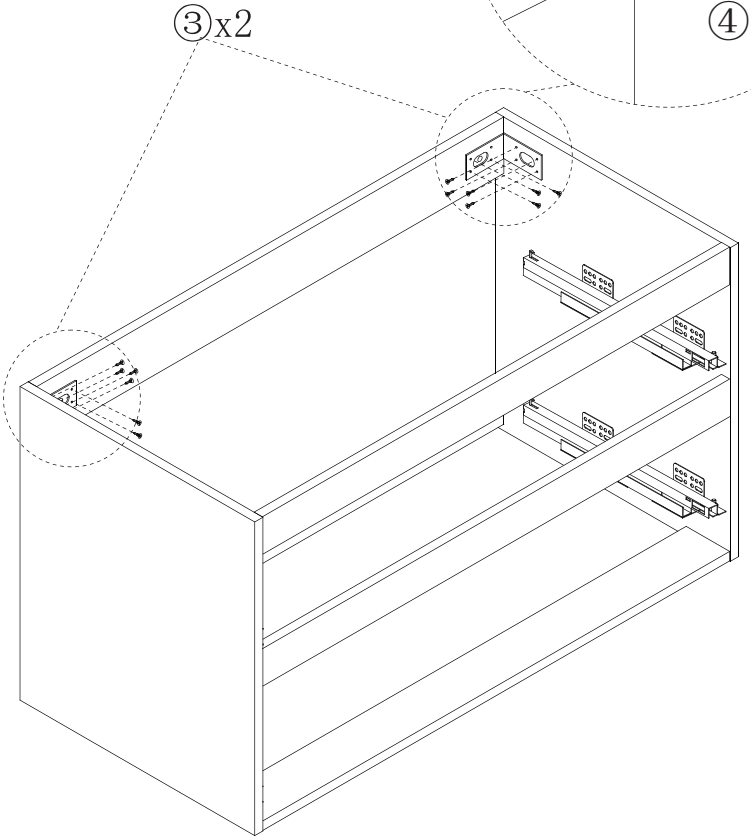

Step 29

All four slides need to be installed

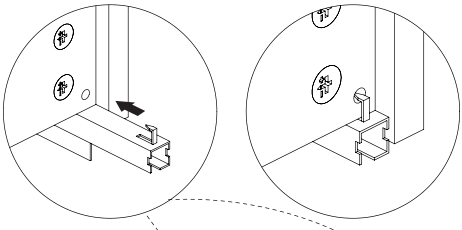

1. The hole at the end of the drawer should be fastened to the hook of the slide rail

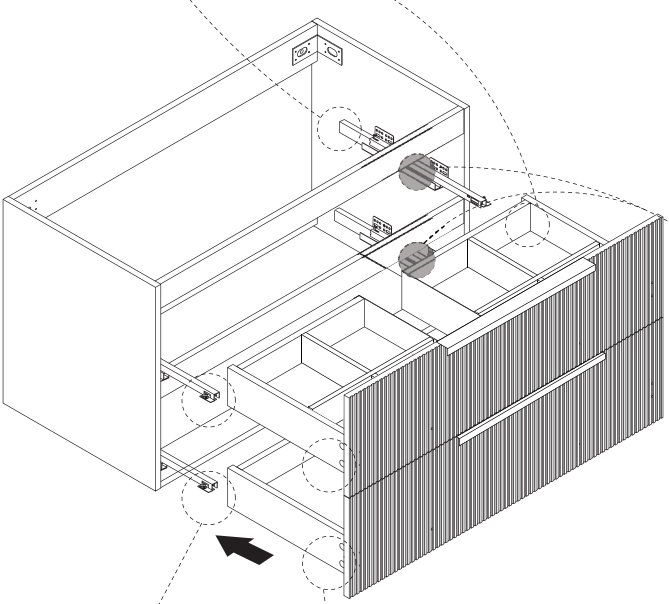

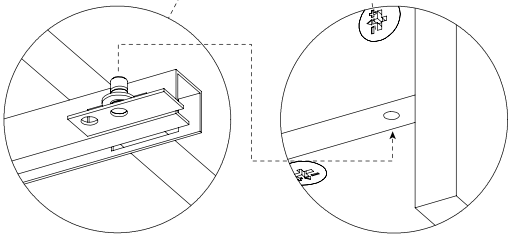

2. Drawer sides, bottom buckle

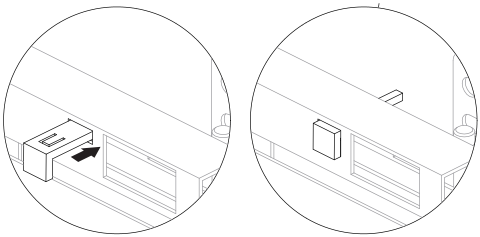

3. Push in the clasp to prevent the drawer from falling out

Step 30

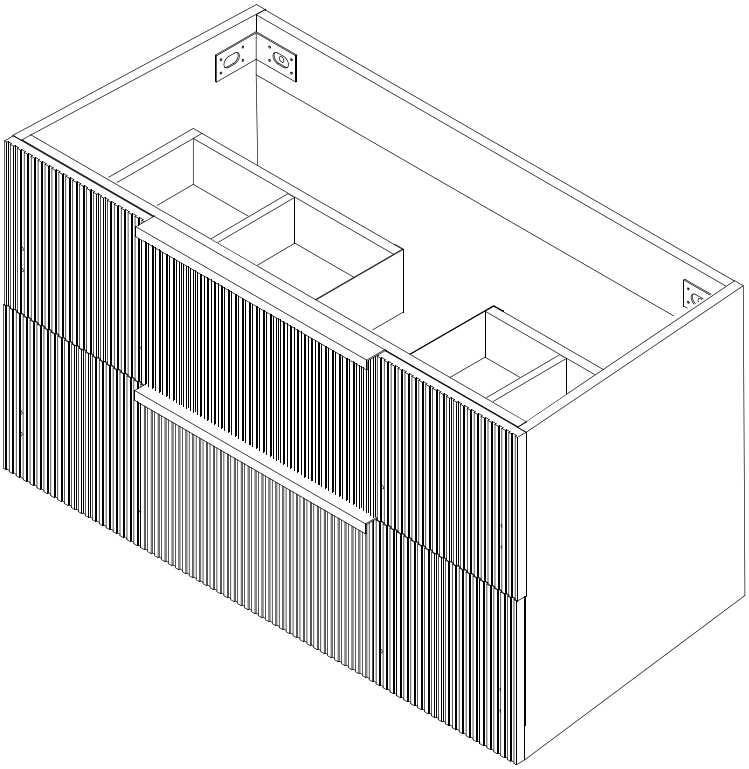

⑤ 	2pcs	⑥ 	2pcs

Step 31

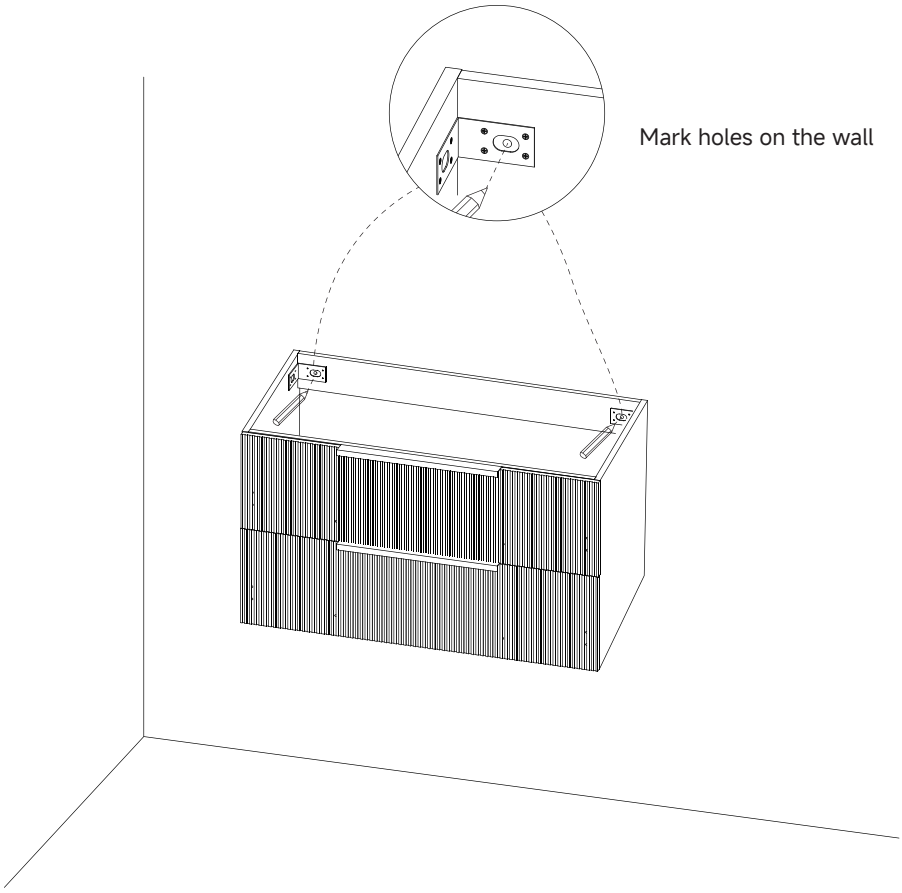

Step 32

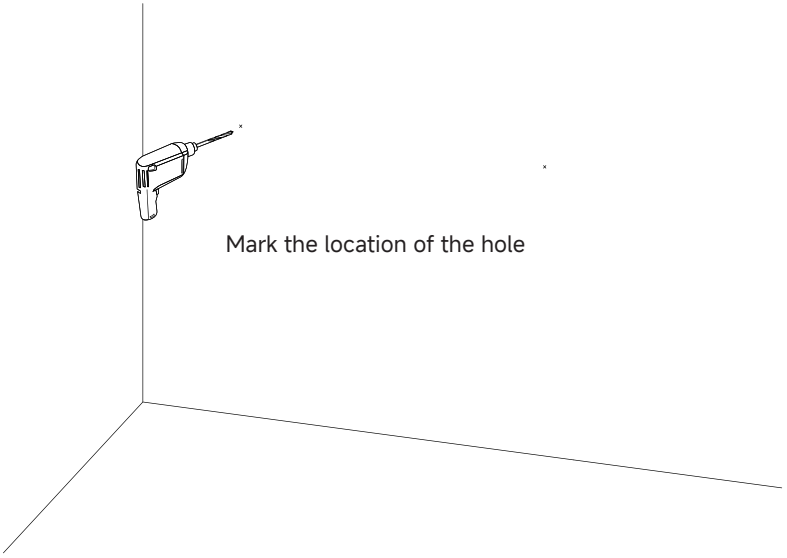

Mark the location of the hole

Step 33

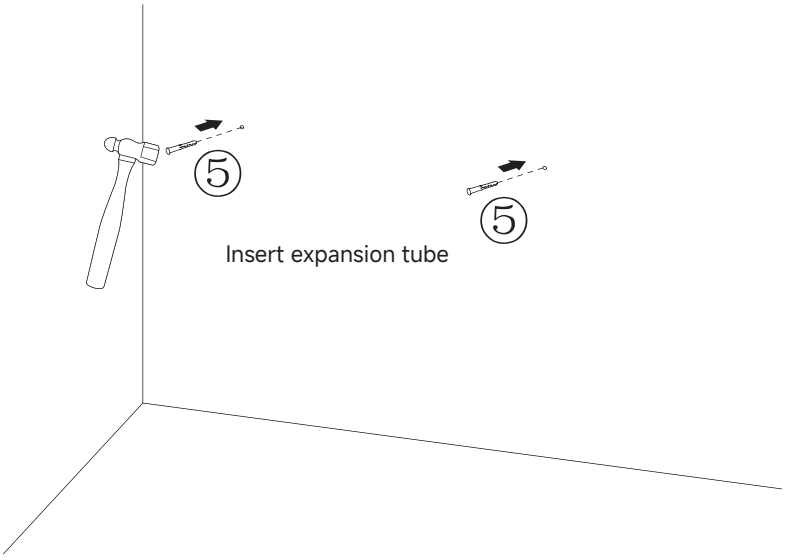

Insert expansion tube

Step 34

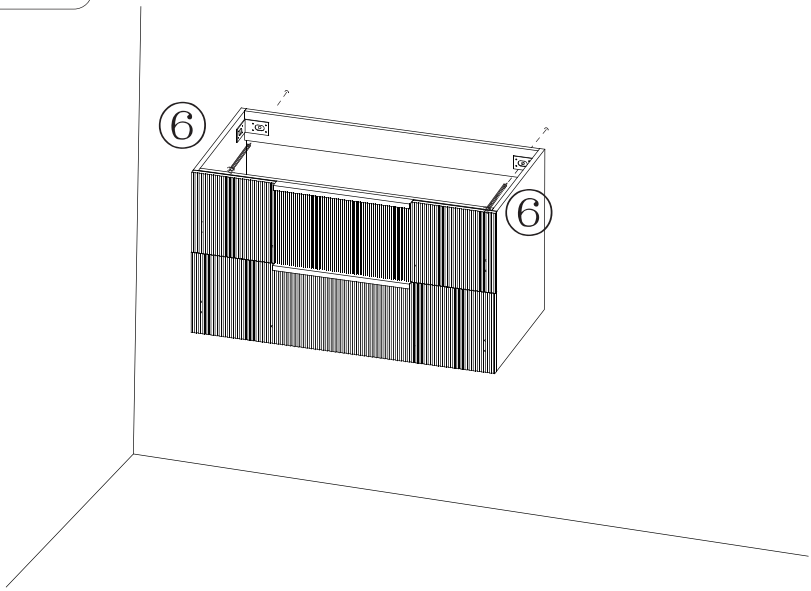

Step 35 Completed

