Traditional Gallery Rail Kit Installation Guide

WHAT'S IN THE BOX

TRADITIONAL GALLERY RAIL KIT TYPE	CENTER POST 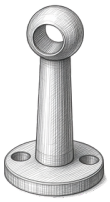	CORNER POST 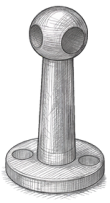	END POST 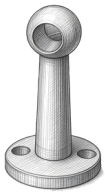	ROD 	INSTALL SCREWS 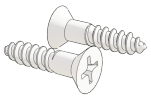
Front Kit, 30" Wide	3	-	2	1 (27.5" Long)	10
Front Kit, 36" Wide	4	-	2	1 (33.5" Long)	12
Front Kit, 48" Wide	5	-	2	1 (44.5" Long)	14
Side Kit, 8" Deep	-	2	-	2 (5.375" Long)	4
Side Kit, 10" Deep	-	2	-	2 (7.375" Long)	4
Side Kit, 12" Deep	-	2	-	2 (9.375" Long)	4

TOOLS NEEDED (not included): power drill, material-rated drill bit sized appropriately for #4 screws, screwdriver, pencil, tape measure.

You will also need to equip yourself with proper personal-protective equipment in the form of job-rated gloves, goggles and any other recommended equipment suggested by the tools and adhesives you use. ***See our website for safety and prop-65 information.***

STEP #1: Plan your layout and mark holes

Utilizing a tape measure, decide where each post should be placed. Place end/corner posts 1.25" from the corner of the shelf. *See Image A.*

Tip: *It's best to completely set up your rail kit, including the rods, before assembly and installation.*

When adding a side kit: Replace end posts with provided corner posts.

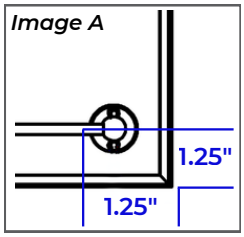

Note: If you want to alter your post placement from our recommendations, be sure to compensate for any changes in later steps.

Next, add all center posts to the rod and layout on top of shelf and position posts as desired. *See images B, C and D.*

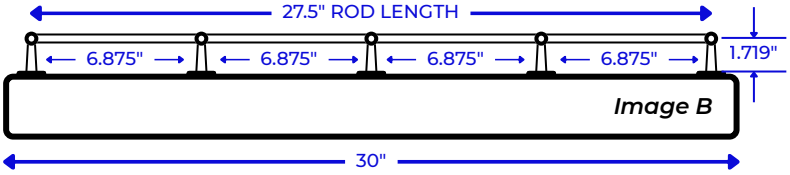

If using all included components, your selected kit should closely match our recommended layouts.

Next, add all center posts to the rod and layout on top of shelf and position posts as desired. *See images B, C and D.*

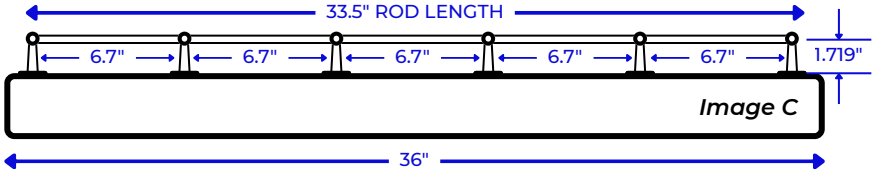

If using all included components, your selected kit should closely match our recommended layouts.

(***STEP 1 CONTINUED ON NEXT PAGE)***

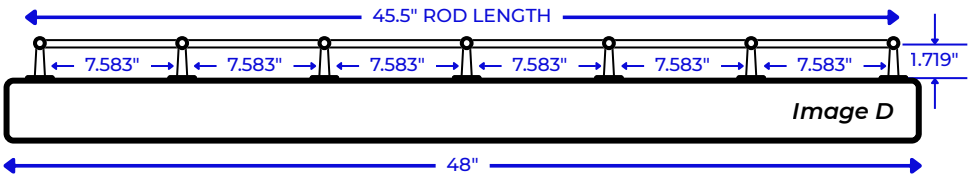

Instructions: https://bit.ly/4xwjPCU
Product Category: https://bit.ly/GalleryRails
Website: dod.brownwoodinc.com

Designs of distinction® by BWI
Kitchen, Bath & Home

Traditional Gallery Rail Kit Installation Guide

STEP #1 CONTINUED: Plan your layout and mark holes

Check your configuration prior to any marking.

For side kits, replace end post with corner post, add side extension and end posts at the other end.

With all components in their proper position, use a pencil to mark where you will be drilling holes; you should mark two holes for each post.

STEP #2: Drill holes in marked spots

Using a power drill, with a material-rated bit for #4 screws, drill holes in every location you've marked. Drill no more than ½" deep.

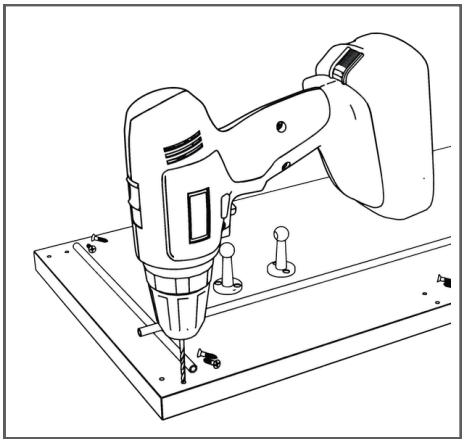

Tip: *You can wrap a small piece of painter's tape around the bit around 1/2" up from the penetration tip of the bit to indicate when you should stop drilling. This ensures you don't drill deeper than you have. You can also use a simple sandpaper or tweezers to remove any tear-out before installing components.*

NOTE: While some projects may not require pre-drilling and may simply utilize drilling screws directly into surfaces without any prior steps, it is imperative that you pre-drill when installing our gallery rail. Failure to pre-drill may result in damage or compromise to screws, components and the surface of installation.

STEP #3: Attach components

Once the holes have been drilled, you can now attach your posts and rail. Starting at one end, attach the end/corner post using two included screws and a small Phillips screwdriver. Tighten the screws until the base sits flush to the surface without movement. **Hand tighten only. DO NOT OVERTIGHTEN!**

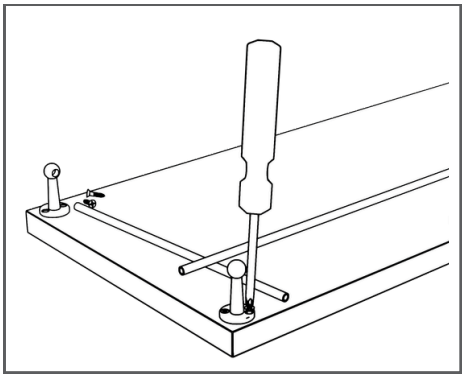

Tip: *Your Phillips screwdriver should have a small tip to fit the #4 screw heads and should have a small enough profile as to not contact and ultimately scratch the finish on the posts.*

NOTE: **We do not recommend using a power drill for this step.** Drills have too much torque and may damage the screw or cause material threading to strip.

Attach the center posts one at a time by sliding onto the rod and securing with included screws. If your shelf is between two walls, simply slide all the center posts onto the rod, insert the rod in the single end/corner post already attached and carefully move the center posts into position.

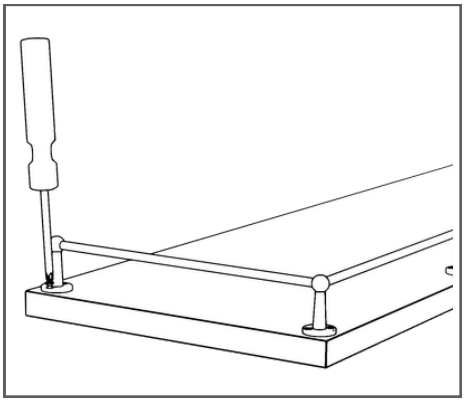

Once all your center posts are secured, you feed the rod through completely, you can now attach the last end/corner post.

For side kits, install side rods into the corner posts at the end of the front side. Next, install the remaining ends posts.

After you've installed all posts, do one final check to assure all rods are properly in place and each post is securely attached.

Note: *Rods may have a slight bit of movement/play within the post layout. This shouldn't compromise setup integrity, but you may apply a small of adhesive at the post-to-rod connection point if this is a concern.*

Instructions: https://bit.ly/4xwjPCU
Product Category: https://bit.ly/GalleryRails
Website: dod.brownwoodinc.com

Designs of distinction® by BWI
Kitchen, Bath & Home