Storage Must-have

ADJUSTABLE STORAGE SHELVES

AMB005635_PL_2448

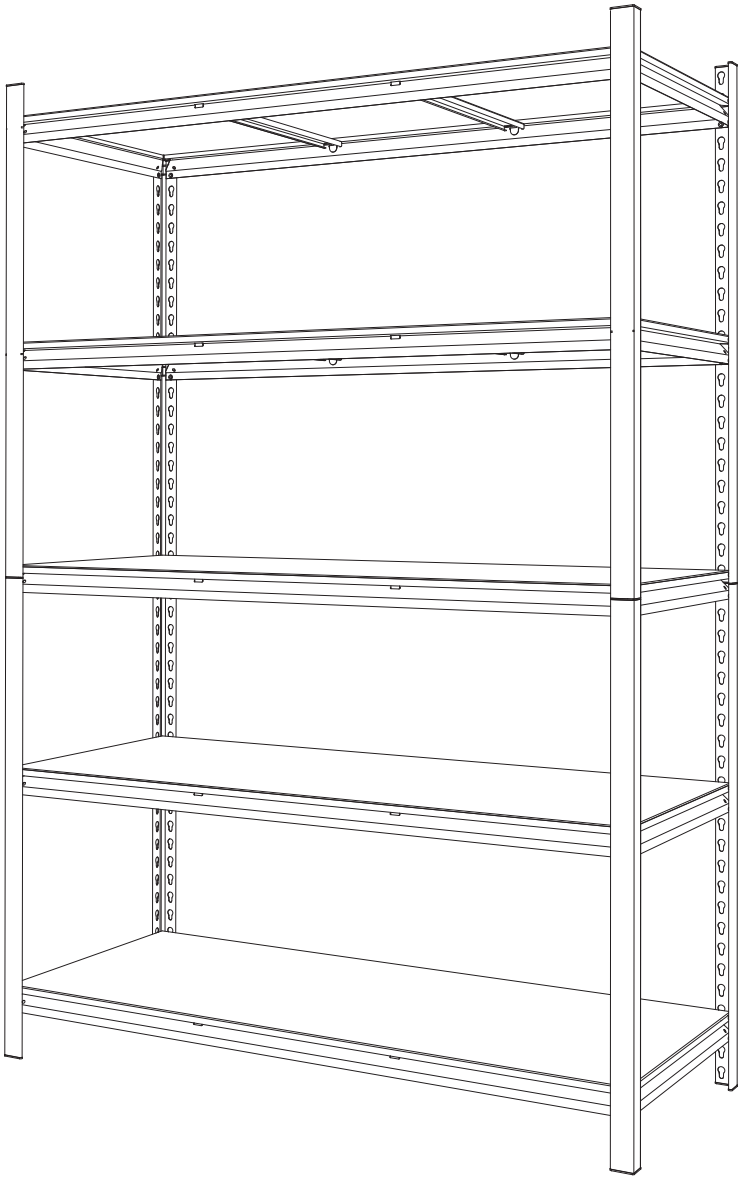

Installation manual

Please read this instruction manual carefully before attempting to install.

Two or more people recommended for assembly.

Not intended for use by children.

Assembly time: Approximately 20 minutes.

Keep away from fire or other heat sources.

Follow instructions in sequence.

Wear protective gloves during assembly.

A

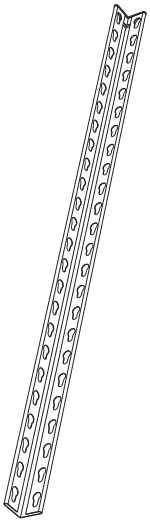

Upper Pole X 4

B

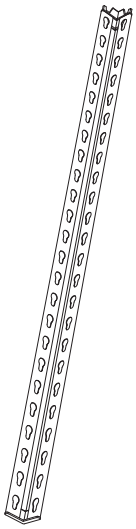

Lower Pole X 4

C

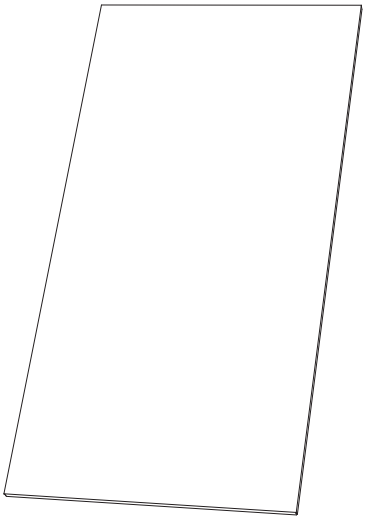

Laminate X 5

D



Short Support Beam X 10

E

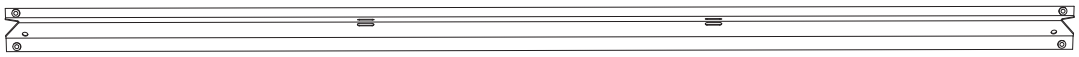

Long Support Beam X 10

F

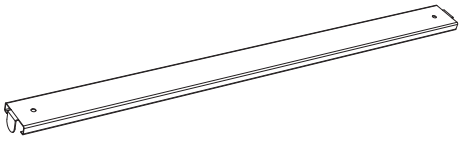

Connection Strip X 10

G

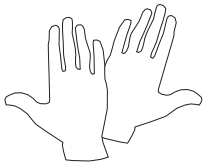

Gloves X 1

H

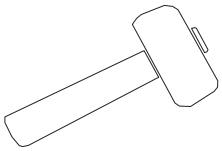

Rubber Mallet X 1

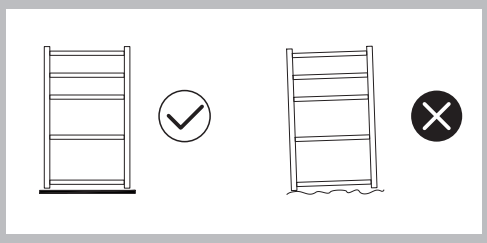

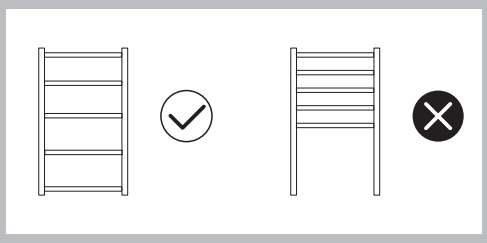

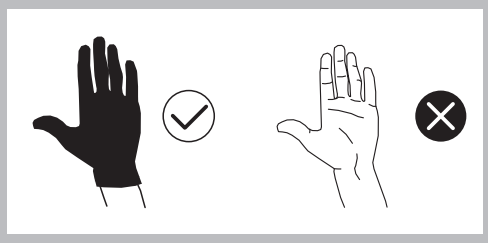

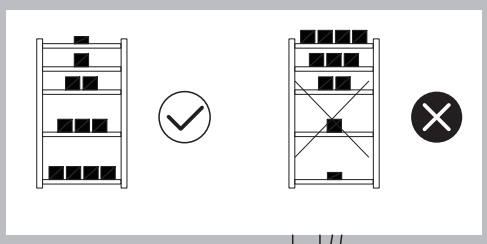

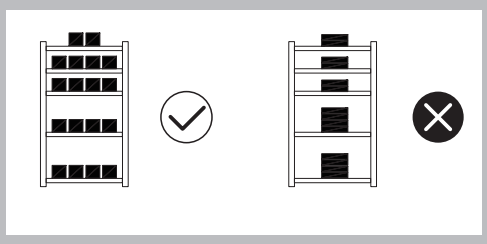

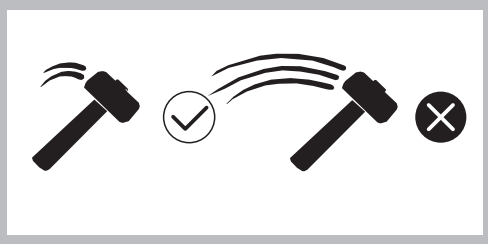

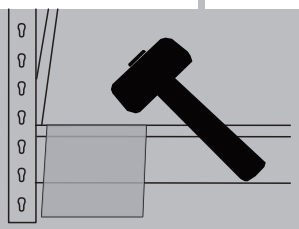

Please use a rubber mallet to secure the frame during assembly.

Please cover it with soft towel when hammering to avoid damaging.

Step 1

B		X 2
E		X 1

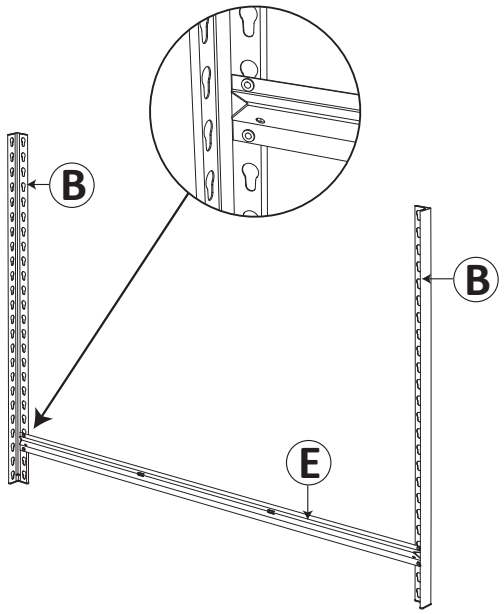

Step 2

B		X 2
D		X 2
E		X 1

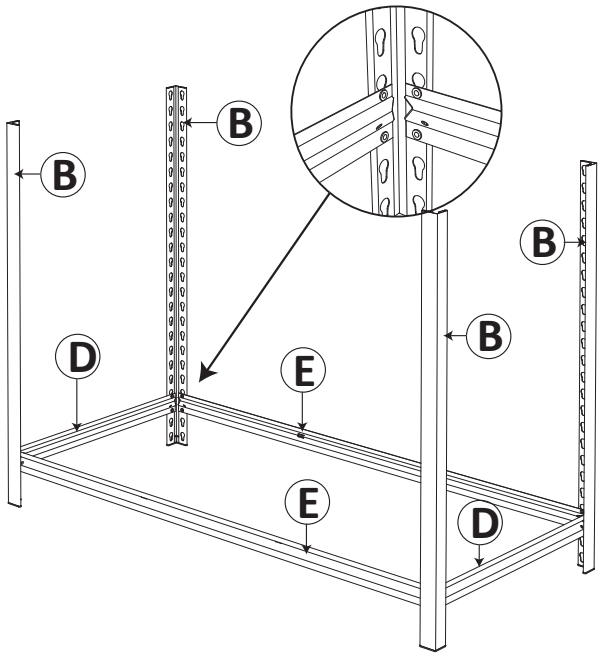

Step 3

F		X 2

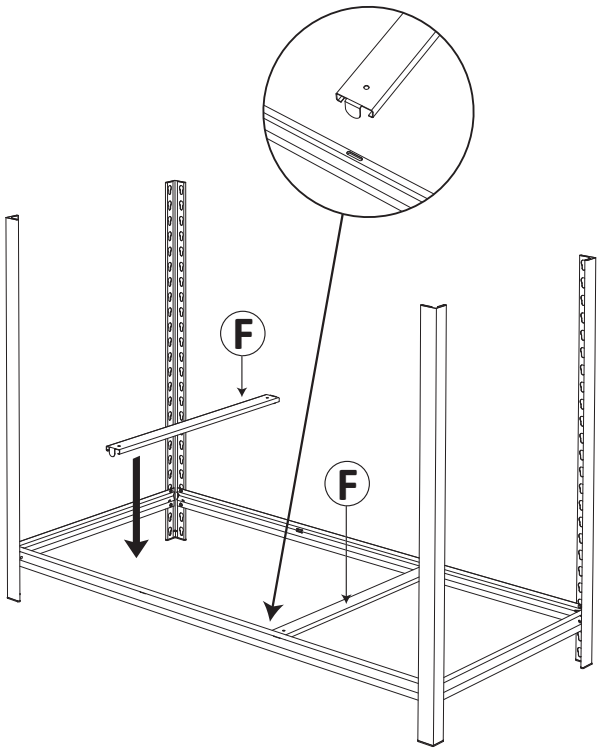

Step 4

C	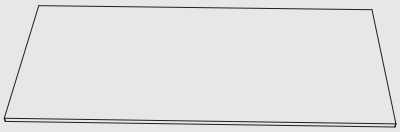	X 1

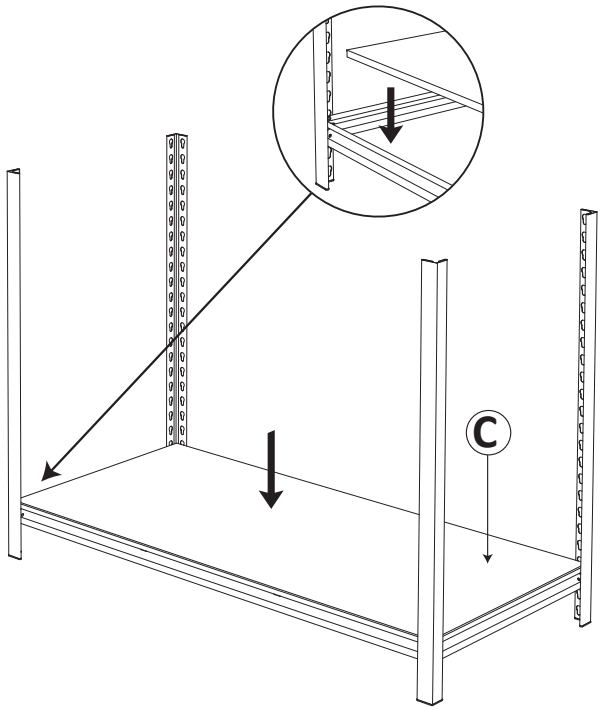

Step 5

D		X 2
E		X 2

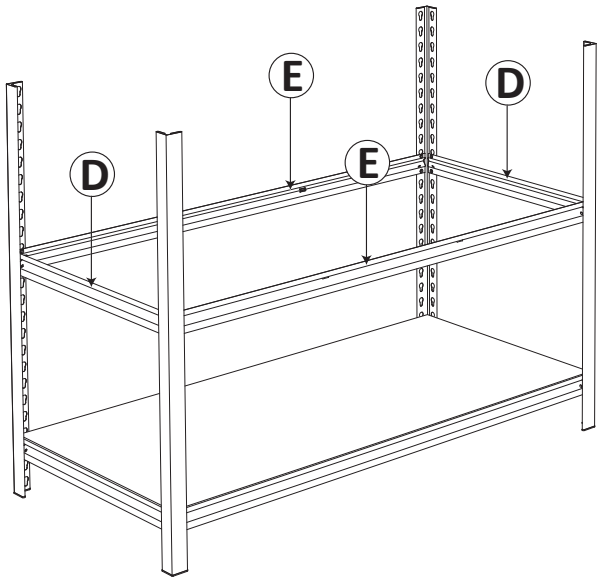

Step 6

F		X 2

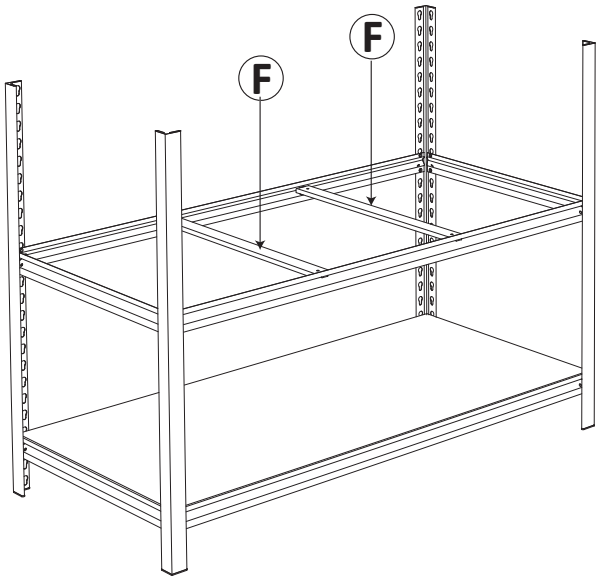

Step 7

C	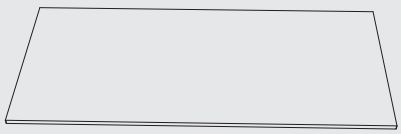	X 1

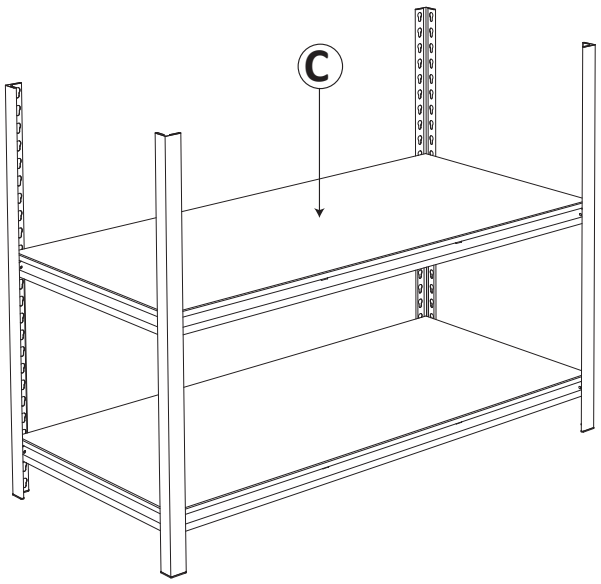

Step 8

A		X 4

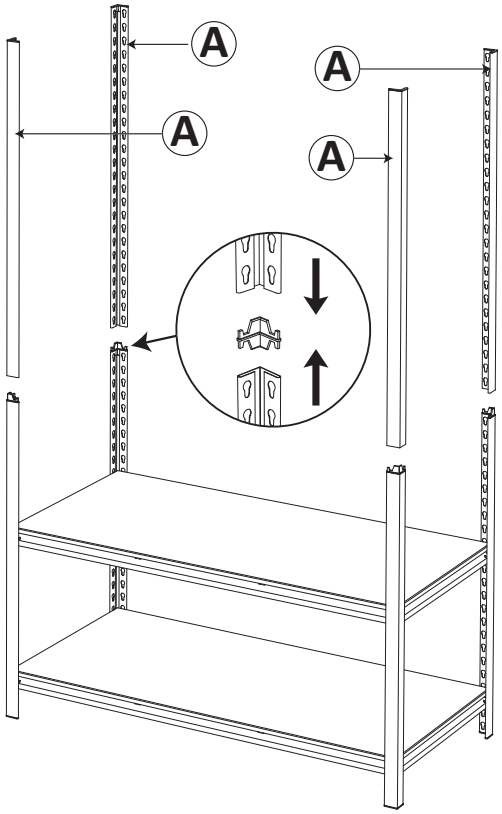

Step 8

D		X 2
E		X 2
F		X 2

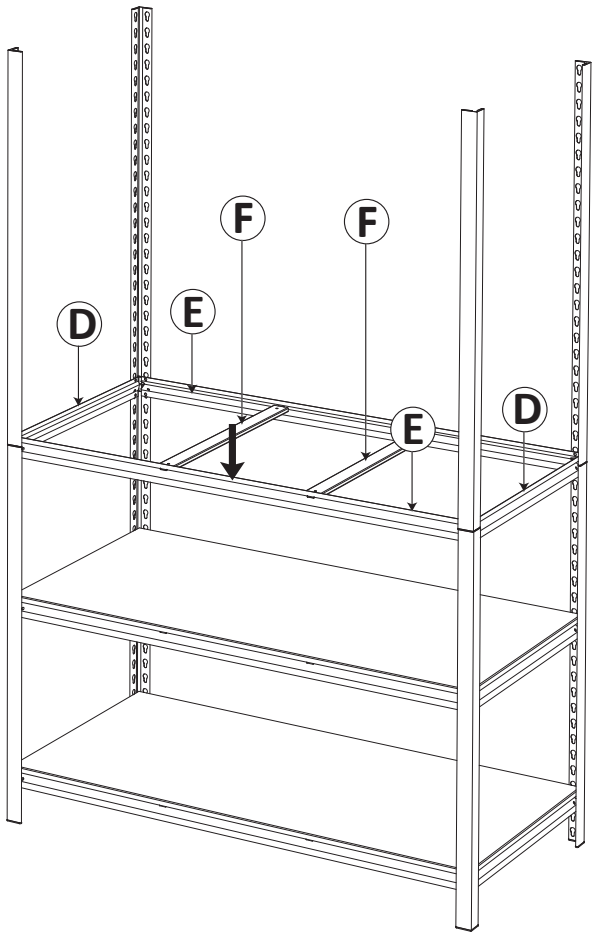

Step 9

C	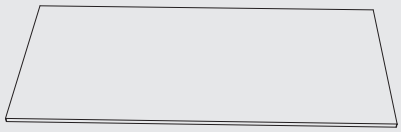	X 1

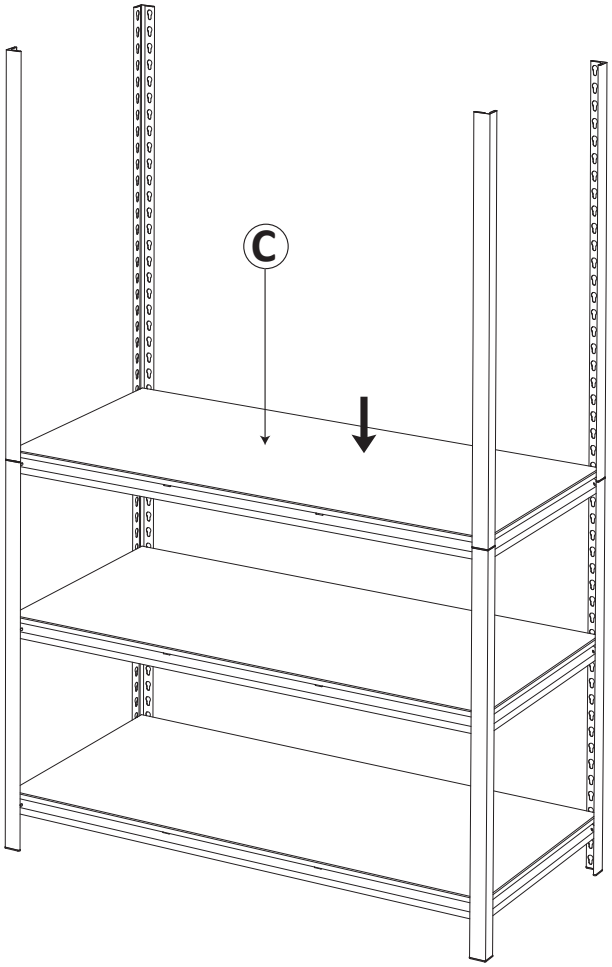

Step 10

D		X 2
E		X 2
F		X 2

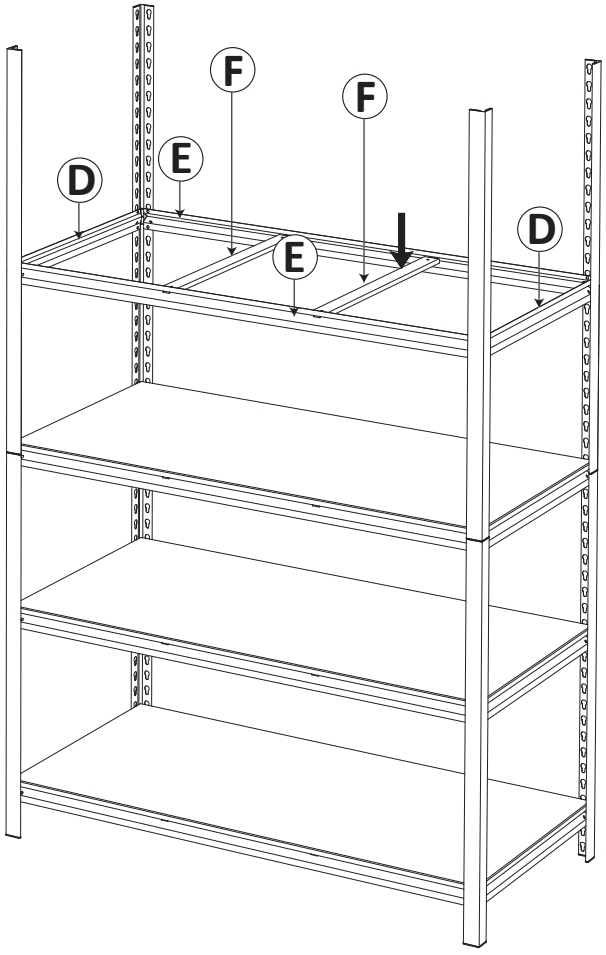

Step 11

C	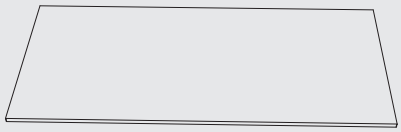	X 1

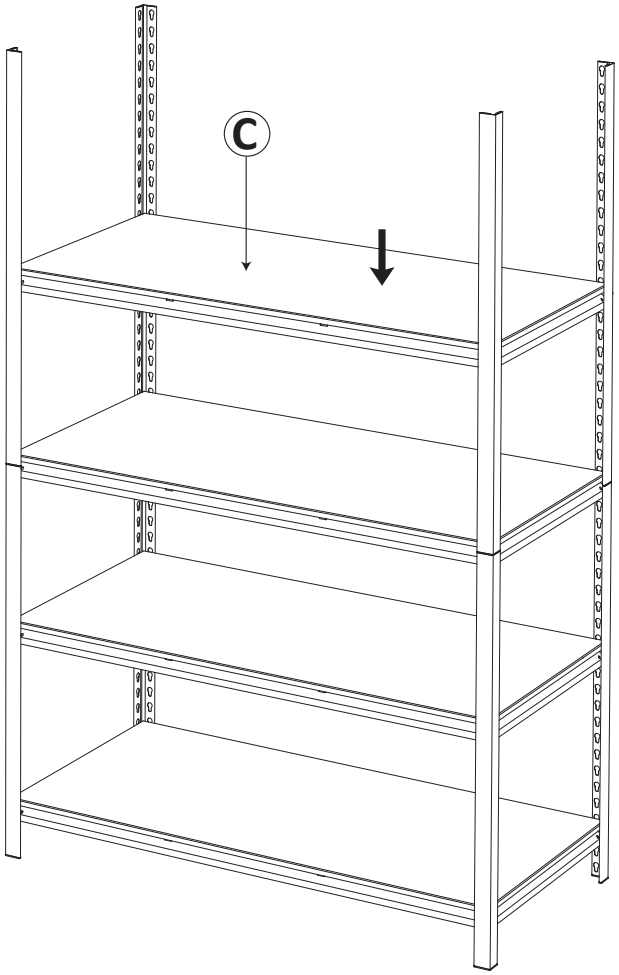

Step 12

D		X 2
E		X 2
F		X 2

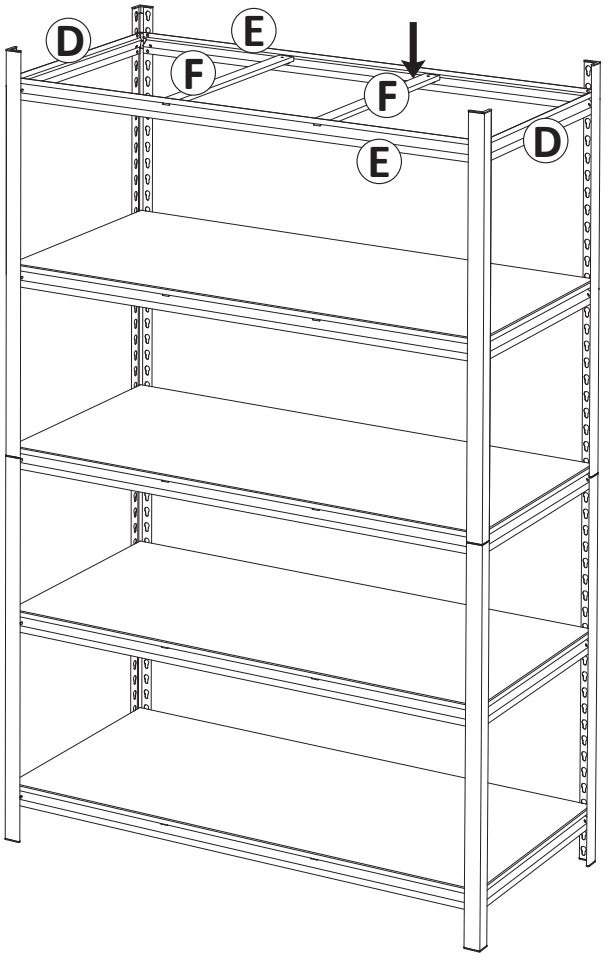

Step 13

C	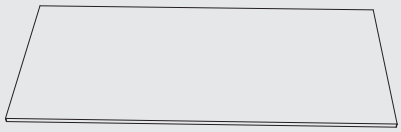	X 1

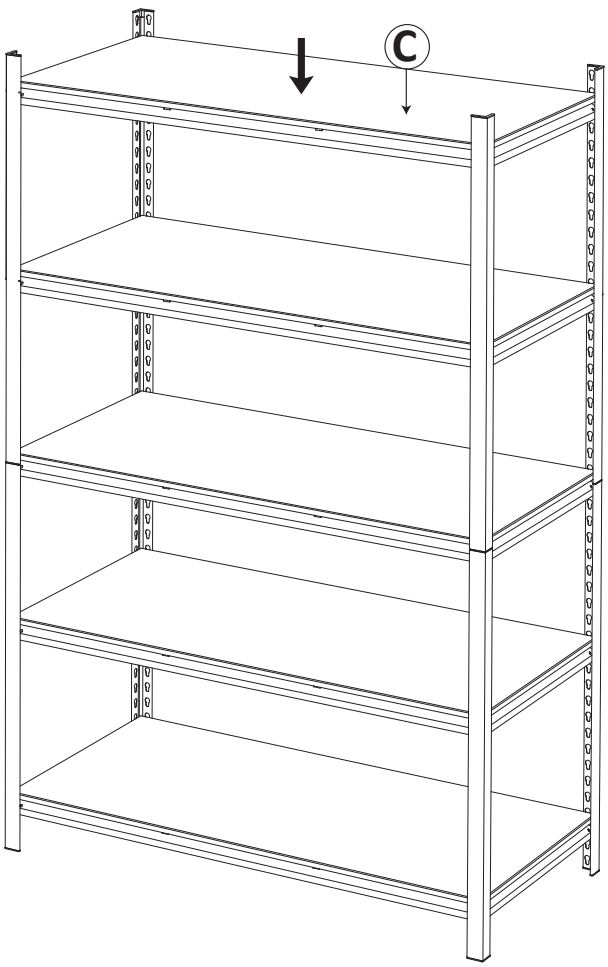

For customer service and warranty

PLEASE READ THIS ASSEMBLING INSTRUCTION MANUAL CAREFULLY BEFORE USING

Made in China

General Installation Video:

EC REP Informationen für EU -Vertreter		UK REP
Name:	Apex CE Specialists GmbH	APEX CE SPECIALISTS LIMITED
Adresse:	Grafenberger Allee 277, 40237 Düsseldorf, DE	6f East Union Street, Manchester, England, M16 9AE
Contact:	Wells Yan	Wells Yan
E-mail:	info@apex-ce.com	info@apex-ce.com

EN	Warning: Do Not Overload
DE	Warnung: Nicht überladen
FR	Attention: Ne pas surcharger
ES	Advertencia: No sobrecargue
IT	Avvertimento: Non sovraccaricare
PL	Ostrzezenie: Nie przeciążać
NL	Waarschuwing: Niet overbelasten