DUO

EasyMount™ Grab Bars

HEALTHCRAFT
Embrace life.

Technical Data Sheet

Product Specification

The product shall be a grab bar with a rectilinear profile. The product shall have square flange covers that conceal the mounting hardware. All components of the product shall be constructed of #304 stainless steel, suitable for use in wet environments. The grab rail portion shall have a 0.8x1.2" / 20x30mm cross-section. The product shall have a weight capacity of 500lbs / 227kg. Product shall comply with ADA Guidelines, specifying the structural strength of grab bars, tubs and shower seats. The grab rail shall be HealthCraft model DUO-GBXX-XX (see table below for appropriate product code).

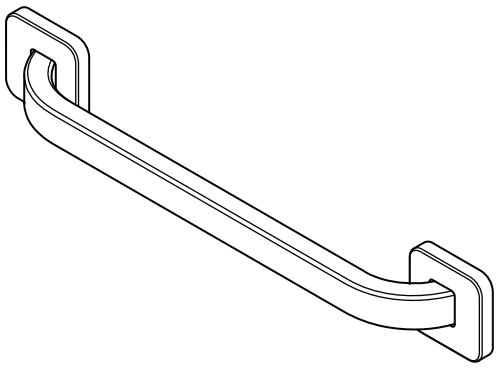

Key Features

- Modern Design with Integrated Support
- Solid Construction and EasyMount™ Flanges
- Suitable For Use in a Wet Environment
- 500lbs / 227kgs Weight Capacity*

Codes and Standards

- ADA 609.2 Cross Section
- ADA 609.3 Spacing
- ADA 609.8 Structural Strength

Specified Model

MODEL	LENGTH	AA - FINISH	MATERIAL
DUO-GB12-AA	12″ (305mm)	CP (Polished Chrome) BS (Brushed Stainless) BLK (Matte Black) GD (Brushed Gold) ORB (Oil Rubbed Bronze)	#304 Stainless Steel
DUO-GB16-AA	16″ (406mm)		
DUO-GB24-AA	24″ (610mm)		

Patent Pending.

www.healthcraftproducts.com
Toll-free: 1-888-619-9992

DUO

EasyMount™ Grab Bars

HEALTHCRAFT
Embrace life.

Technical Data Sheet

Product Dimensions

Model	Total Length (L)	Notch to Notch (N)
GB12	15.5″ / 395mm	12″ / 305mm
GB16	19.5″ / 497mm	16″ / 406mm
GB24	27.5″ / 699mm	24″ / 610mm

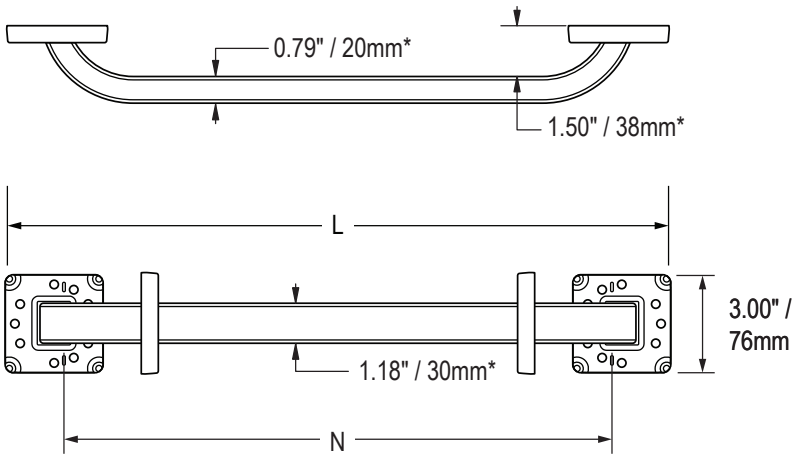

*ADA Compliant

Shipping Dimensions

Model	Height (H)	Width (W)	Depth (D)	Weight
GB12	2.75" / 7cm	16" / 41cm	3.35" / 8.5cm	1.8lbs / 0.8kg
GB16	2.75" / 7cm	20" / 51cm	3.35" / 8.5cm	2lbs / 0.9kg
GB24	2.75" / 7cm	28" / 71cm	3.35" / 8.5cm	2.5lbs / 1.1kg

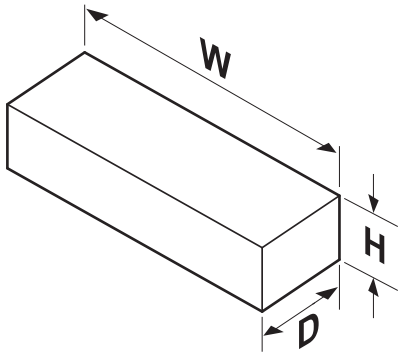

www.healthcraftproducts.com
Toll-free: 1-888-619-9992