ASSEMBLY INSTRUCTIONS
30INCH BATH VANITY (COMBO)

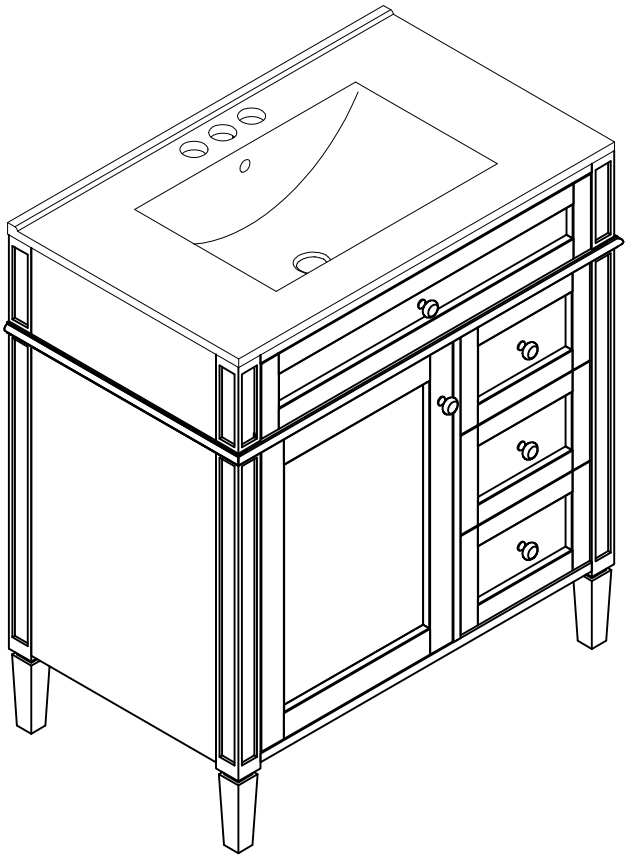

Thank you for purchasing this quality product. Be sure to check all packing material carefully for small parts which may have come loose inside the carton during shipment. Separate, identify and count all parts and hardware. Compare with the parts list to be sure all parts are present.
"DO NOT TIGHTEN SCREWS UNTIL COMPLETELY ASSEMBLED"

* Use of power tool to assemble this product will invalidate any claim and damage this product making unsafe !!!
* Please assemble on a clean soft surface to avoid damage.

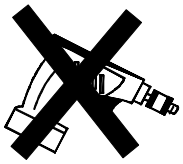

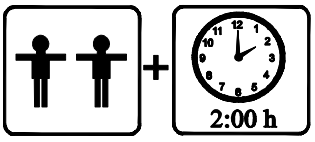

Tools Required

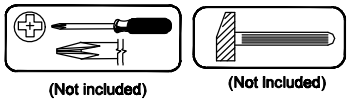

IMPORTANT:

PLEASE READ INSTRUCTION BEFORE STARTING THE ASSEMBLY

PLEASE DO NOT RETURN TO STORE

Please do not return this product to the retailer!!
We are able to assist you in ANY way

If you find that you have any trouble with assembly or missing or damaged parts please contact the seller.

Before Installation

Important – Please read these instructions fully before starting assembly

Thank you for purchasing this quality product. Be sure to check all packing materials carefully for small parts, which may have come loose inside the carton during shipment. Identify and count all items according to the PARTS LIST and/or HARDWARE LIST shown below. Check you have all the components and tools listed on the following pages.

- We recommend that you assemble this product with the assistance of another person; this will make the assembly easier, and will help eliminate damage to the product or injury to persons during assembly.
- Please do not over tighten screws or bolts until the assembly is completed.
- Keep children and animal away from the work area, small parts could choke if swallowed.
- Please put all parts on a non-abrasive floor before assembly,and follow the assembly steps to assemble your newly purchased product correctly and efficently.

Cam Lock Assembly Instructions

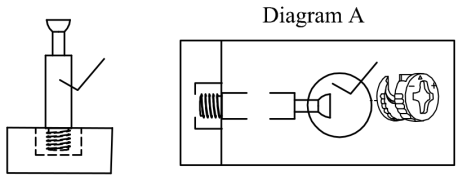

Insert Cam Bolt into hole as shown in diagram A.

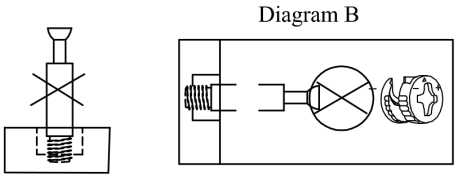

Make sure not to insert the Cam Bolt:
Too deep as shown in figure B as this will cause the Cam Lock to be misaligned and unable to interlock properly.

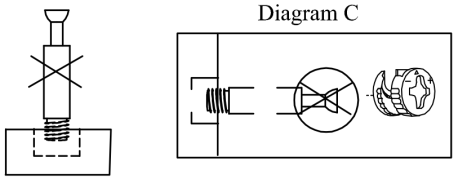

Also avoid inserting the Cam Bolt too close to the surface of the hole as shown in figure C, as this will cause the Cam Lock to be too loose, and not interlock properly.

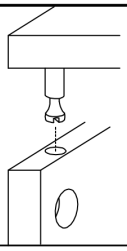

Connect the panels together.

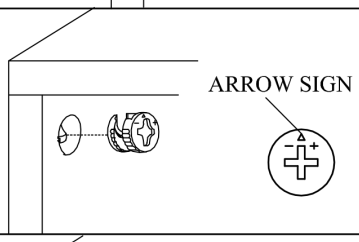

Insert the Cam Lock so the side opening fits over the head of the Cam Bolt.

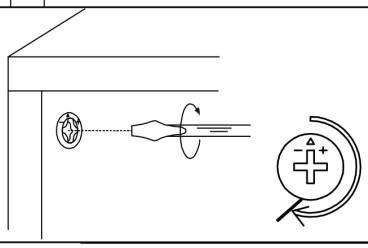

To tighten the Cam Lock, turn it clockwise on half a turn with a flat screwdriver.
**Do not use an automatic screwdriver as it may bend or break if too much power is imposed.*

Detail View - CABINET

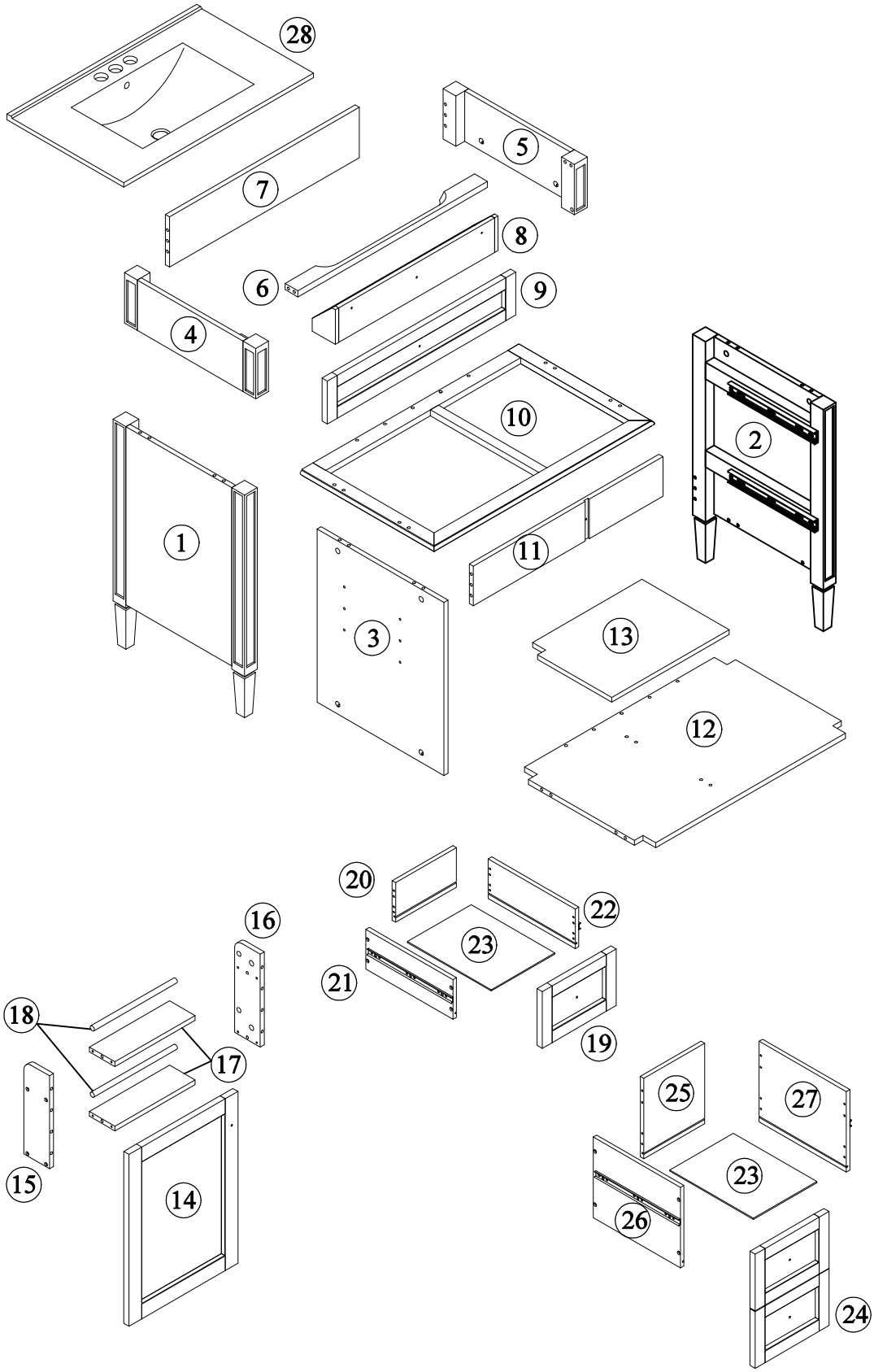

Identifying the Hardware-Identify the hardware using the illustrations below.

Part List

1 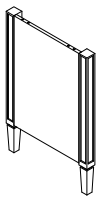 Side Panel (L) - 1pc	2 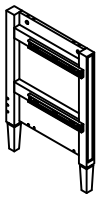 Side Panel (R) - 1pc
3 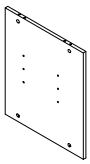 Mid Panel - 1pc	4 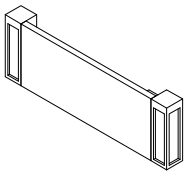 Top Side Panel (L) - 1pc
5 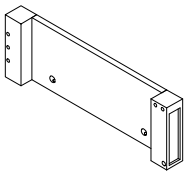 Top Side Panel (R) - 1pc	6 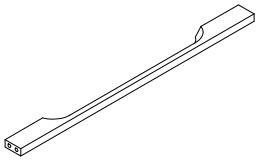 Top Crossbar Front - 1pc
7 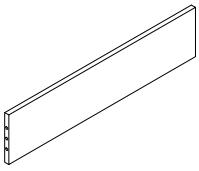 Top Panel Rear - 1pc	8 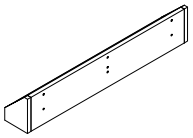 Flip Drawer - 1pc
9 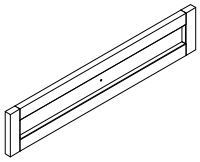 Flip Drawer Face - 1pc	10 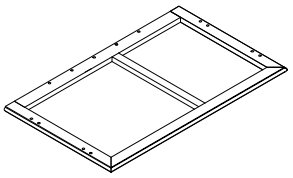 Mid Frame - 1pc
11 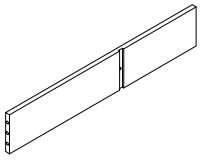 Bottom Panel Rear - 1pc	12 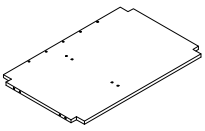 Bottom Panel - 1pc
13 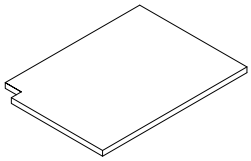 Adjustable Shelf - 1pc	14 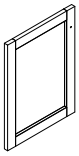 Cabinet Door - 1pc

Part List

15 Left Panel of Door - 1pc	16 Right Panel of Door - 1pc
17 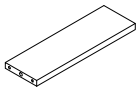 Mid Panel of Door - 2pcs	18 Round Bar - 2pcs
19 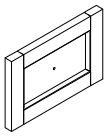 Top Drawer Front - 1pc	20 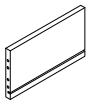 Top Drawer Rear - 1pc
21 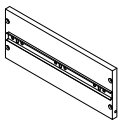 Top Drawer Side (L) - 1pc	22 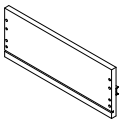 Top Drawer Side (R) - 1pc
23 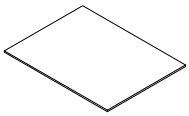 Bottom Drawer Panel - 2pcs	24 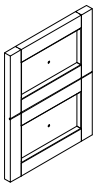 Bottom Drawer Front - 1pc
25 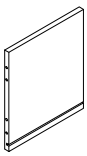 Bottom Drawer Rear - 1pc	26 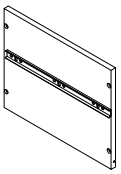 Bottom Drawer Side (L) - 1pc
27 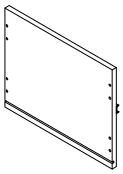 Bottom Drawer Side (R) - 1pc	28 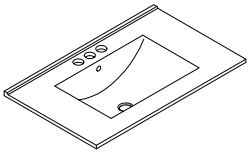 Sink - 1pc

Hardware List ·

A ø6x35mm Three in one bolts(35pcs)	B ø14.5x12mm Three in one lock(35pcs)	C ø8xø4x25mm Round head screw(3pcs)
D ø8xø4x32mm Round head screw(24pcs)	E Handle(5pcs)	F ø5/32"x20mm Handle screw(1pc)
G ø5/32"x25mm Handle screw(4pcs)	H Duo Forte (1pc)	I Rotary Hinge(2pcs)
J ø6xø3x12mm Flat head screw(8pcs)	K Damping hinge (2pcs)	L ø7xø3.5x15mm Flat head screw(12pcs)
M Laminate pad(4pcs)	N ø8x30mm Wood dowel(36pcs)	O Anti fall hardware(1set)
P ø6x30mm Wood dowel(16pcs)		

STEP: 1

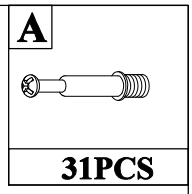

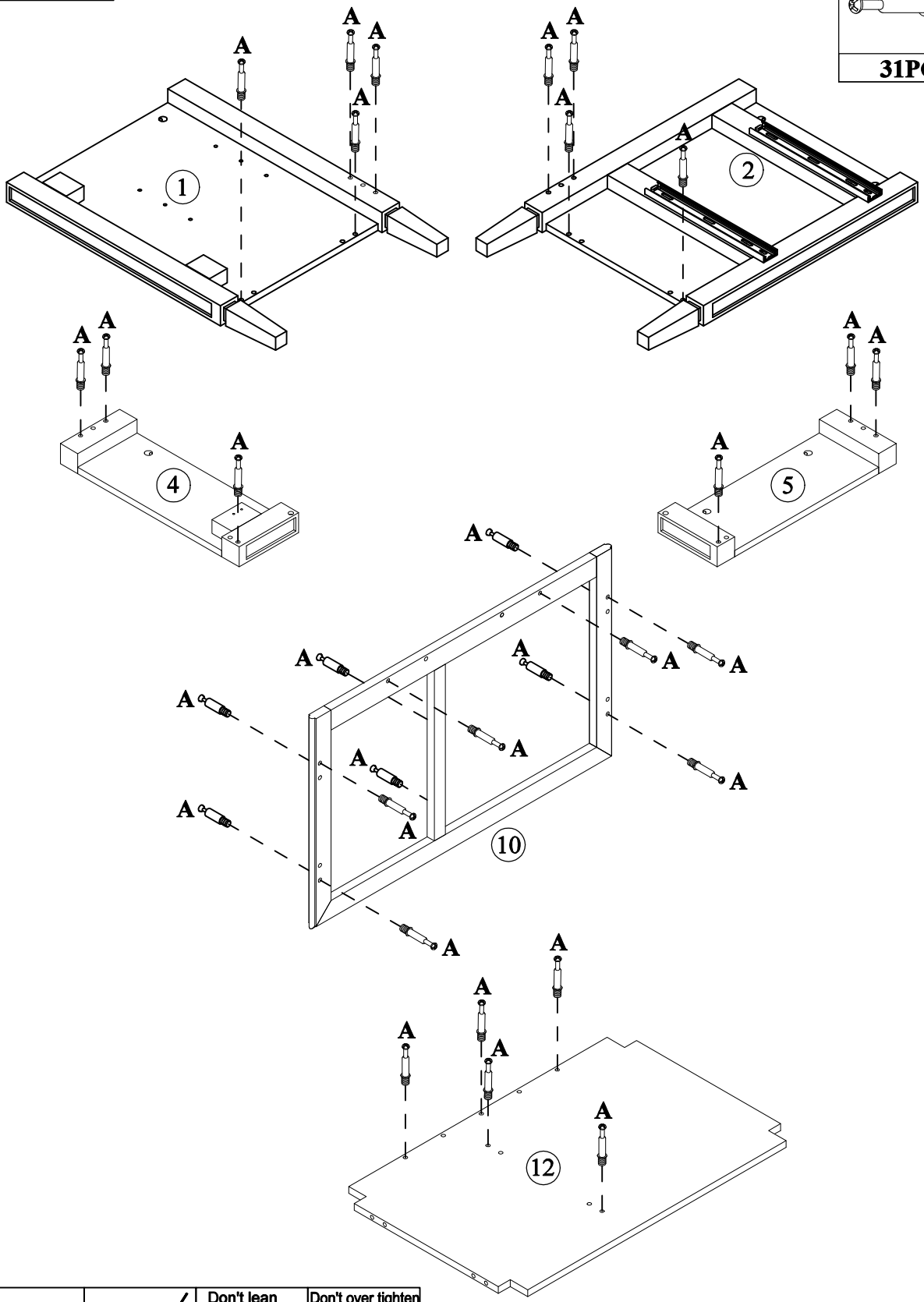

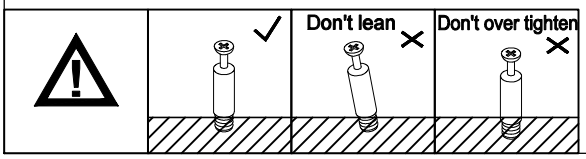

STEP: 2

B	C	N
5PCS	1PC	4PCS

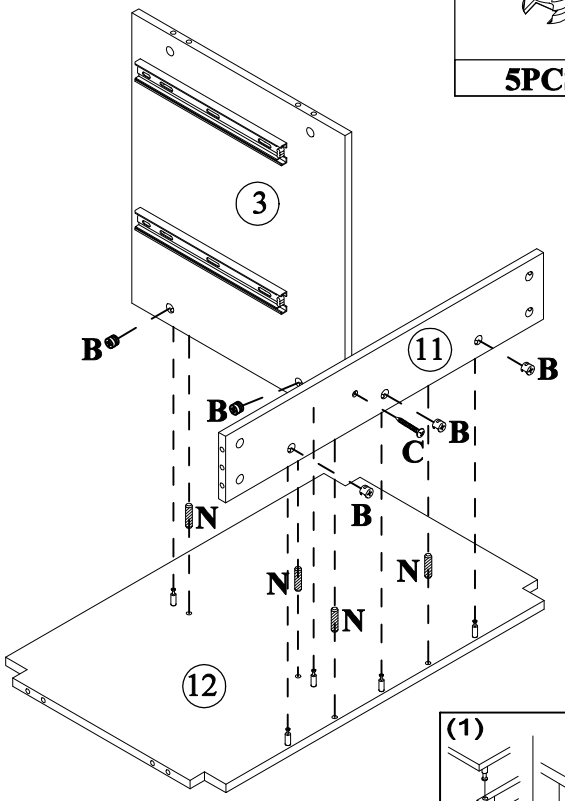

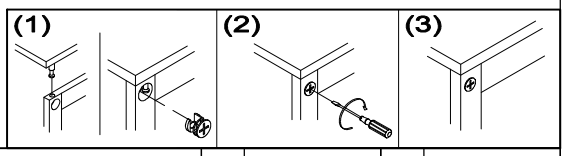

STEP: 3

B	N
8PCS	6PCS

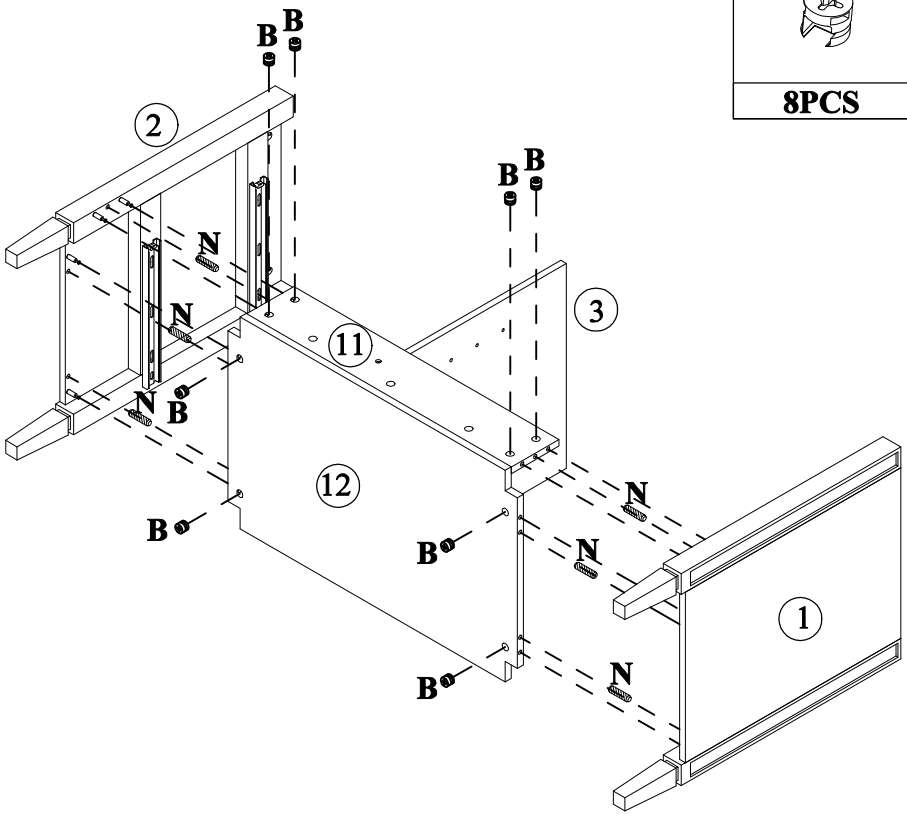

STEP: 4

B	N
6PCS	6PCS

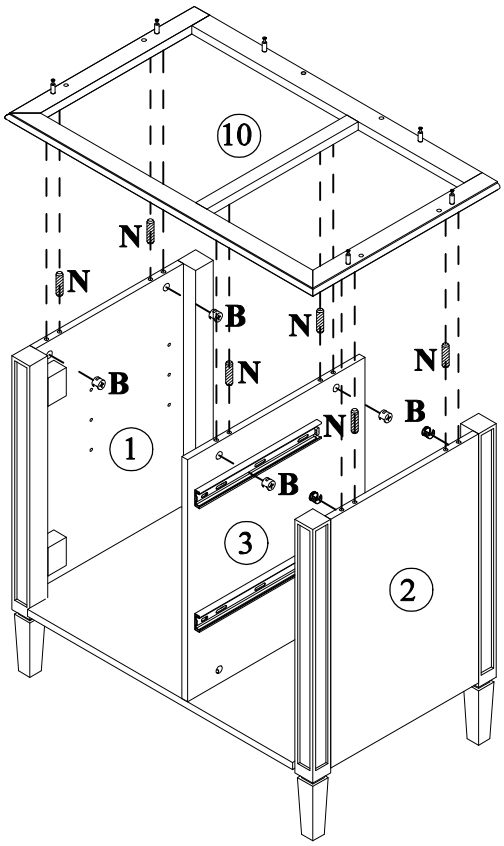

STEP: 5

C	I	J
2PCS	2PCS	4PCS

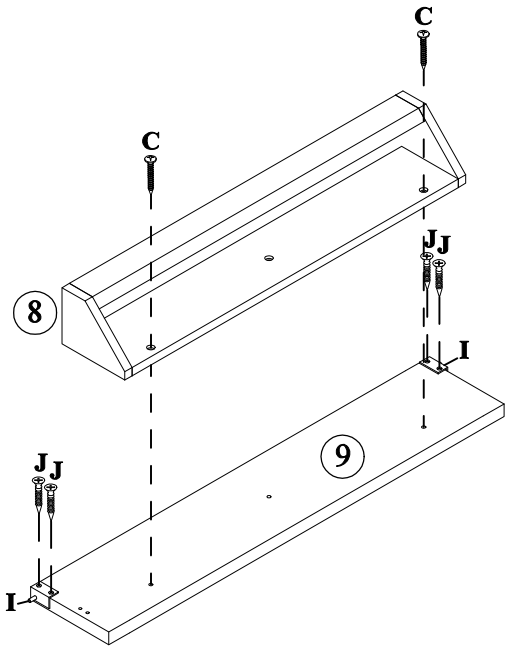

STEP: 6

B	N
6PCS	6PCS

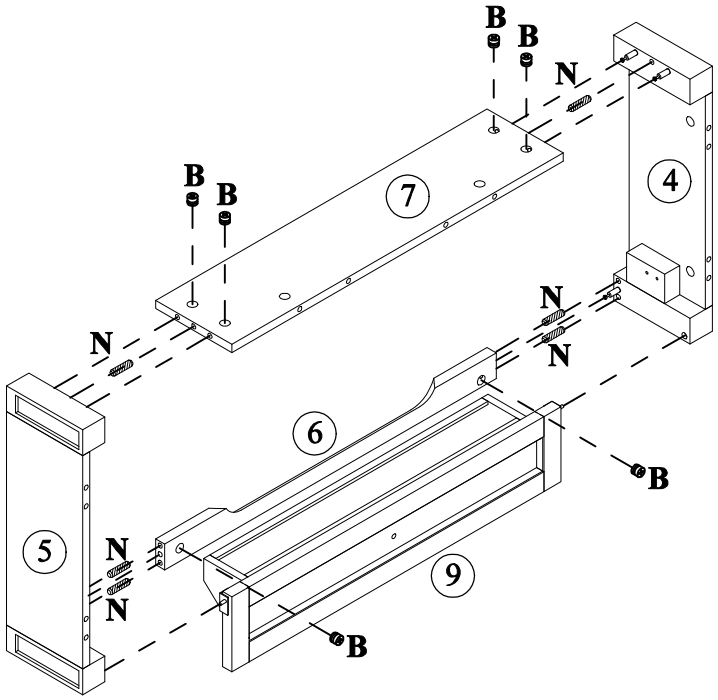

STEP: 7

H	J
1PC	4PCS

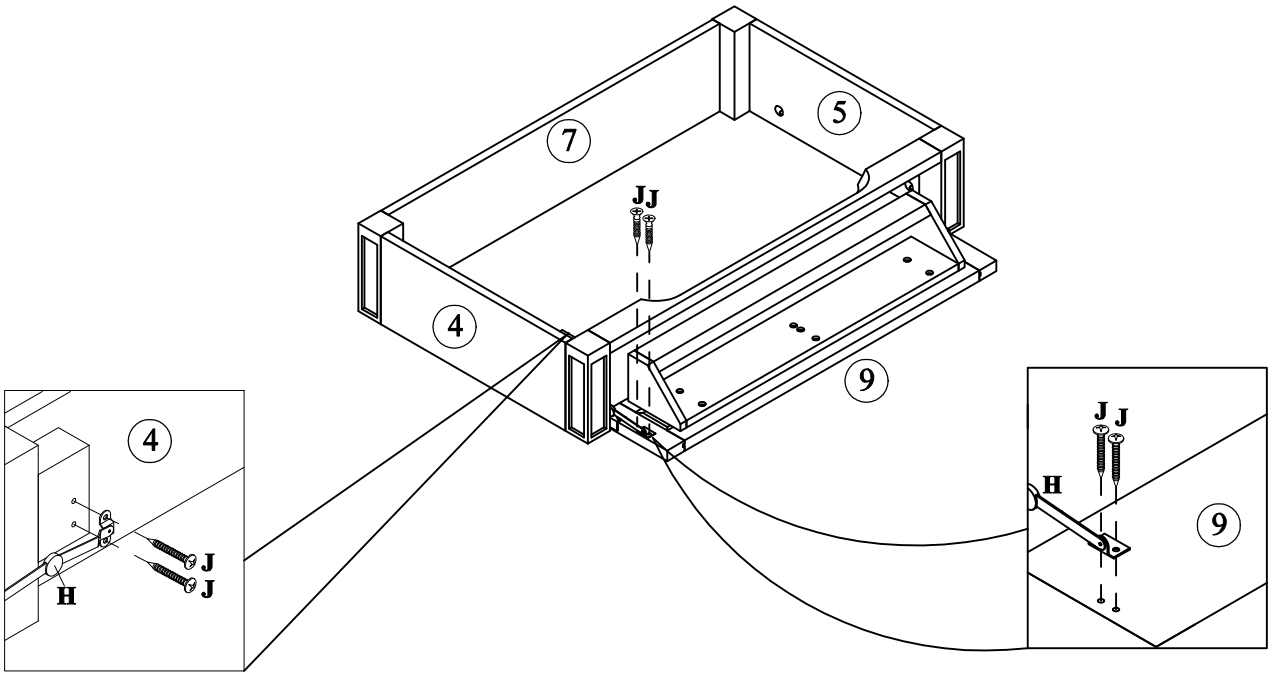

STEP: 8

B	N
6PCS	6PCS

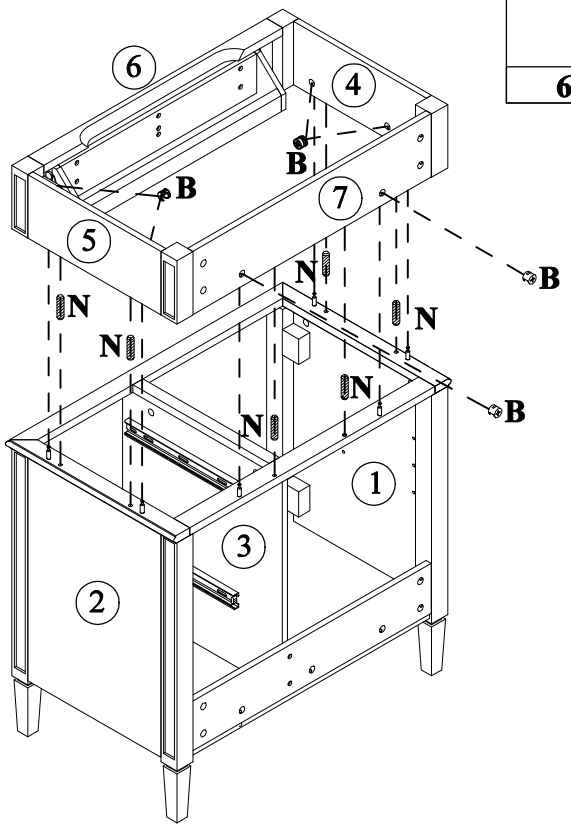

STEP: 9

D	N
8PCS	4PCS

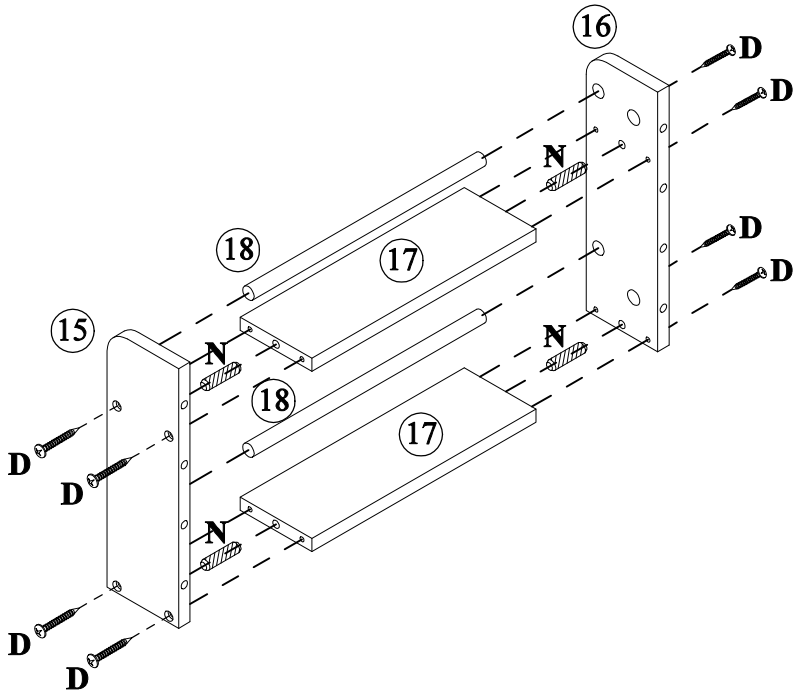

STEP: 10

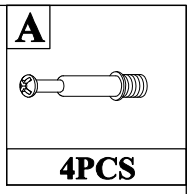

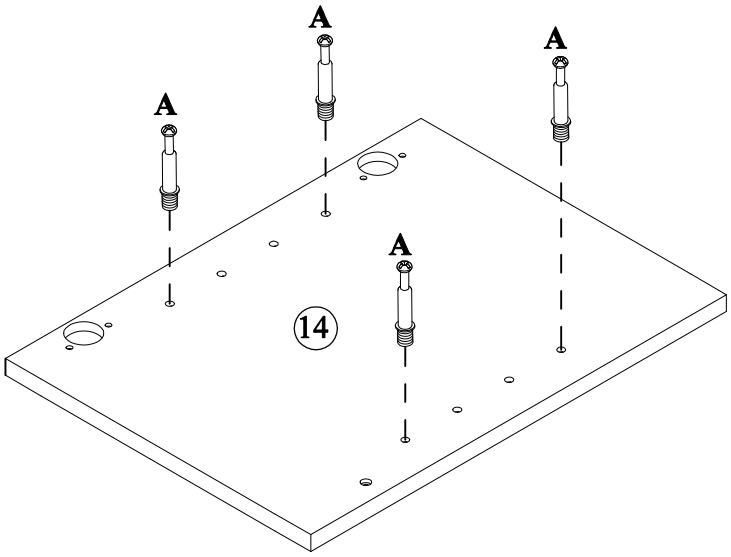

STEP: 11

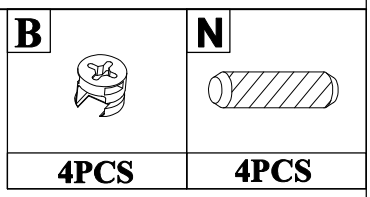

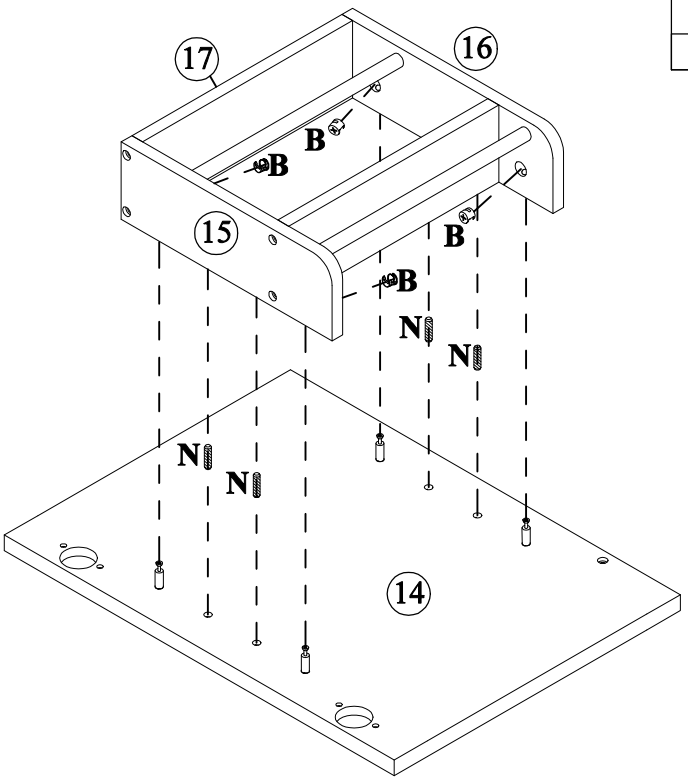

STEP: 12

K	L
2PCS	4PCS

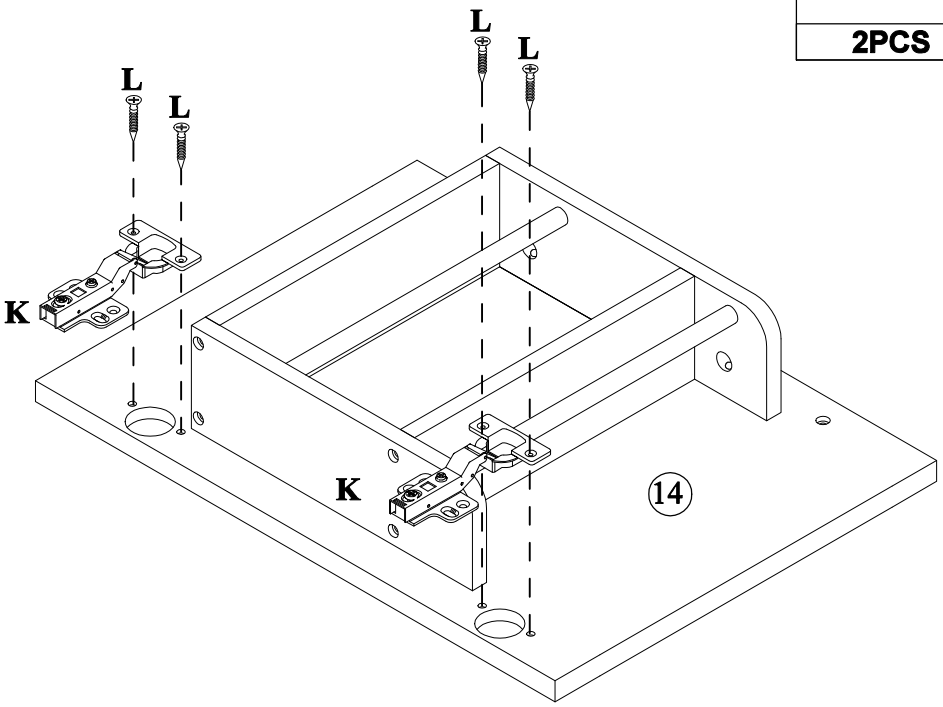

STEP: 13

E	F	G	L
	ø5/32"x20mm	ø5/32"x25mm	
2PCS	1PC	1PC	8PCS

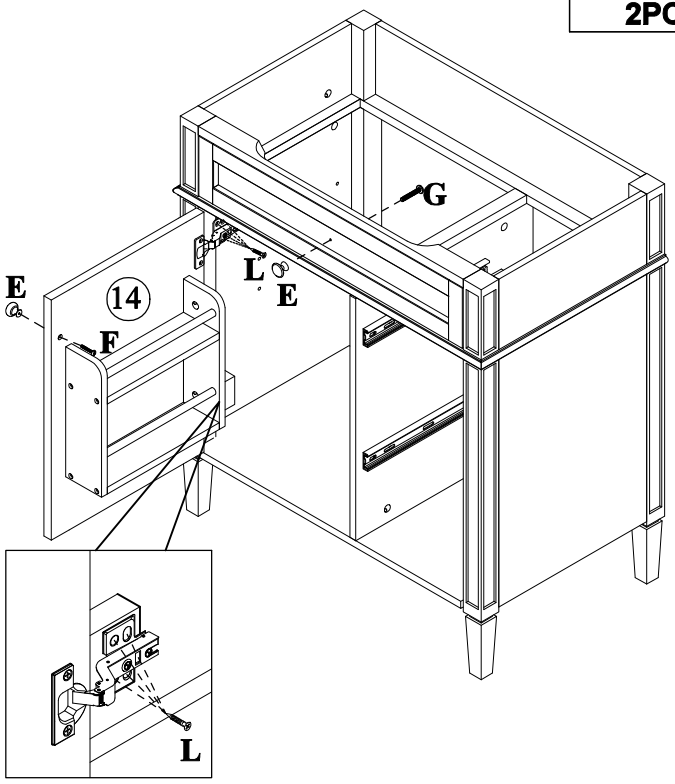

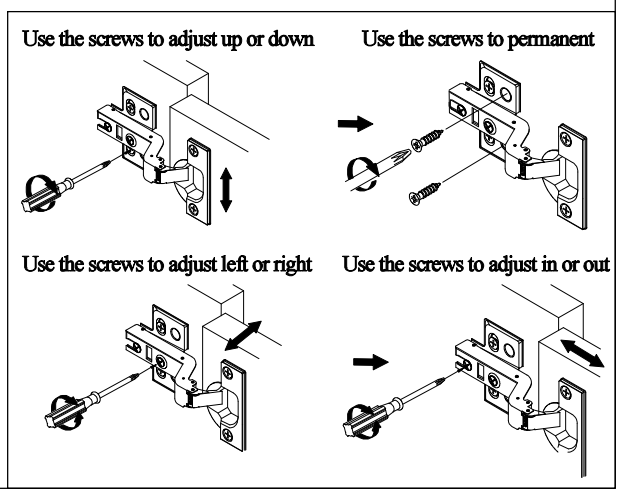

STEP: 14

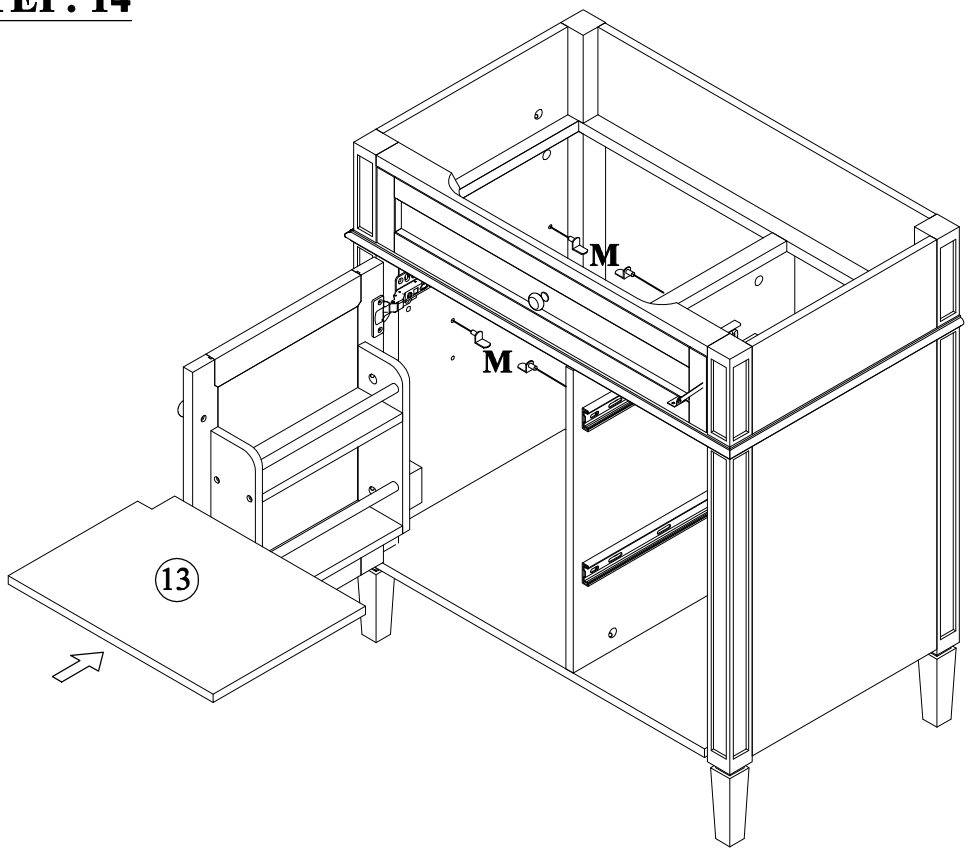

M
4PCS

STEP: 15

D	P
	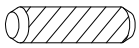
8PCS	8PCS

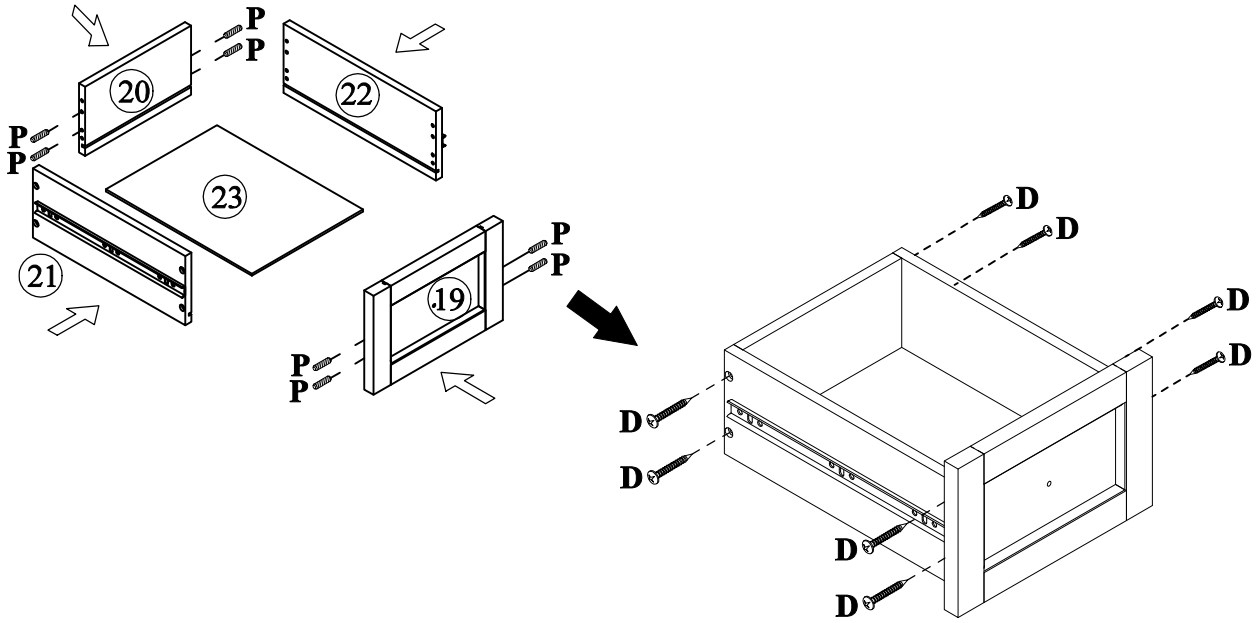

STEP: 16

E	G
1PC	1PC

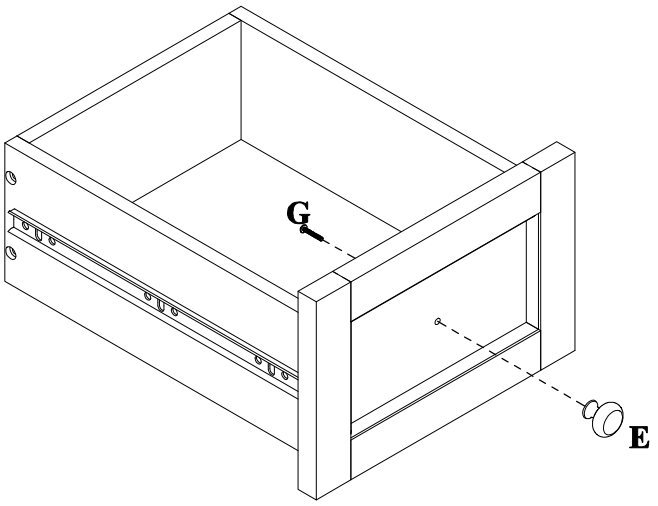

STEP: 17

D	P
8PCS	8PCS

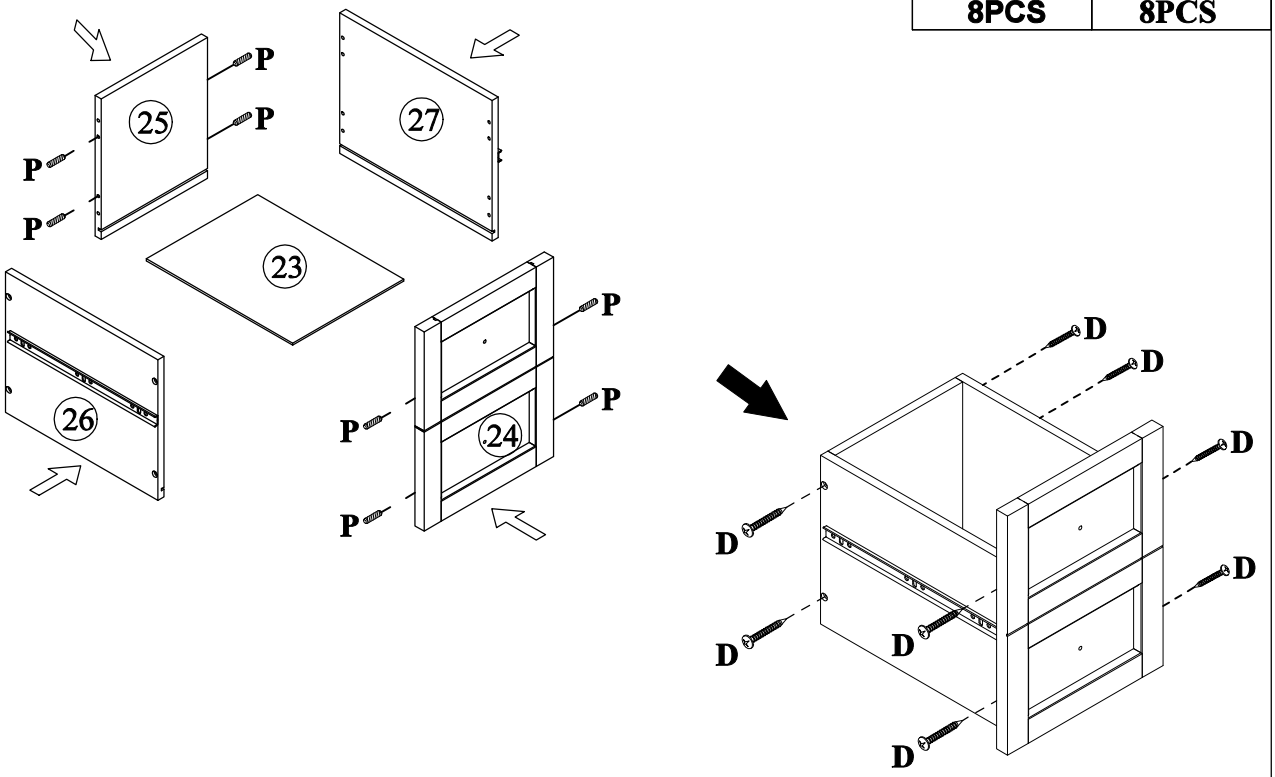

STEP: 18

E	G
2PCS	2PCS

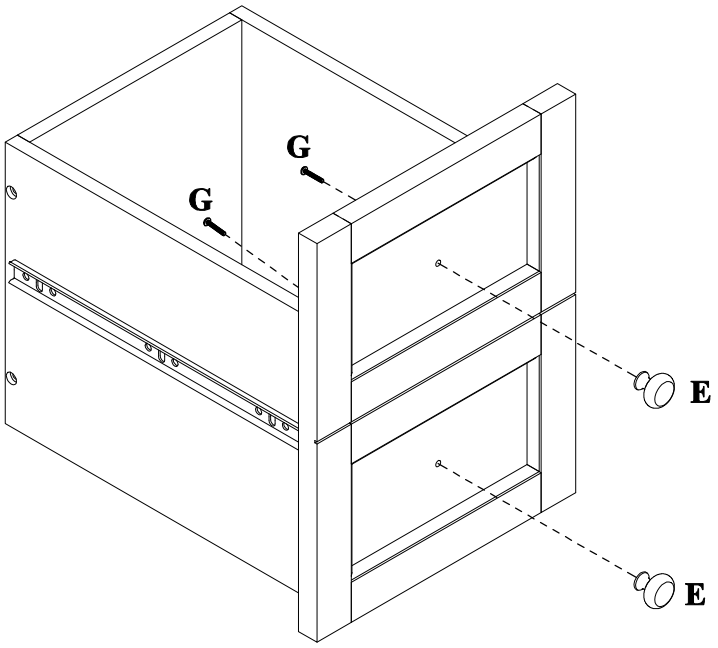

STEP: 19

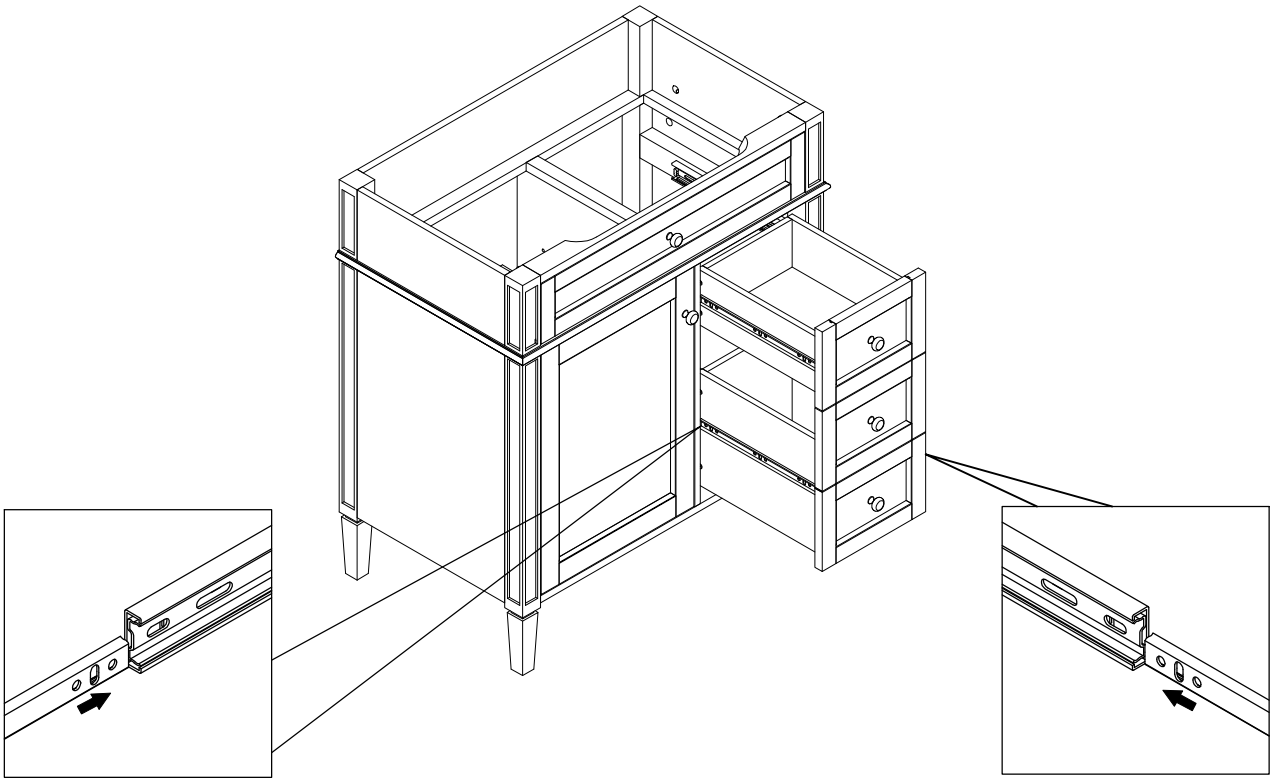

STEP: 20

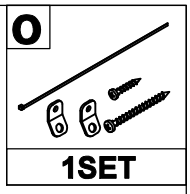

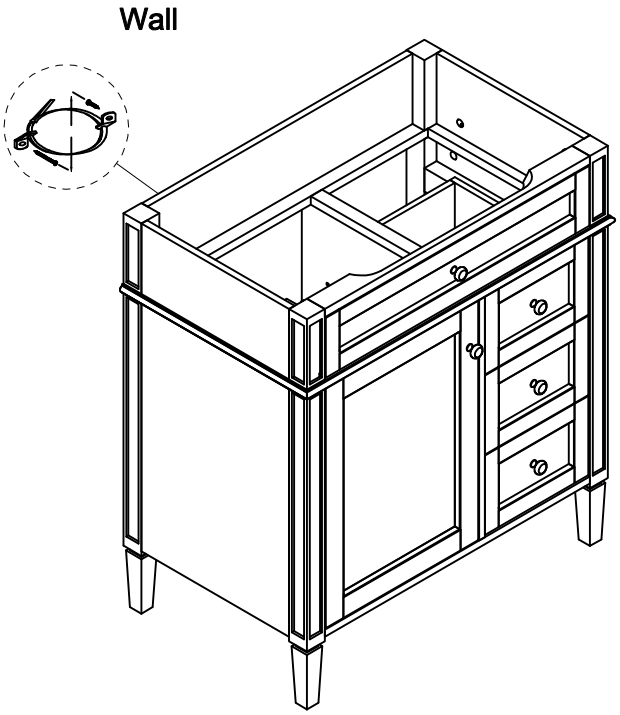

STEP: 21

Install the sink on the cabinet with glue.
Let stand for 24 hours

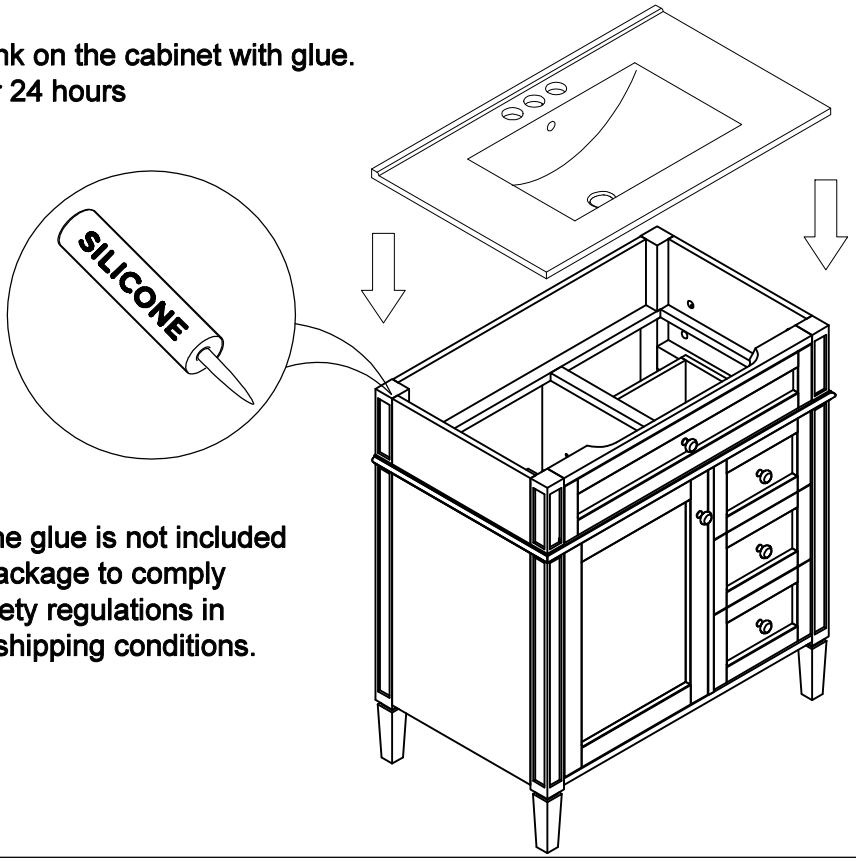

*Silicone glue is not included in the package to comply with safety regulations in certain shipping conditions.

STEP: 22

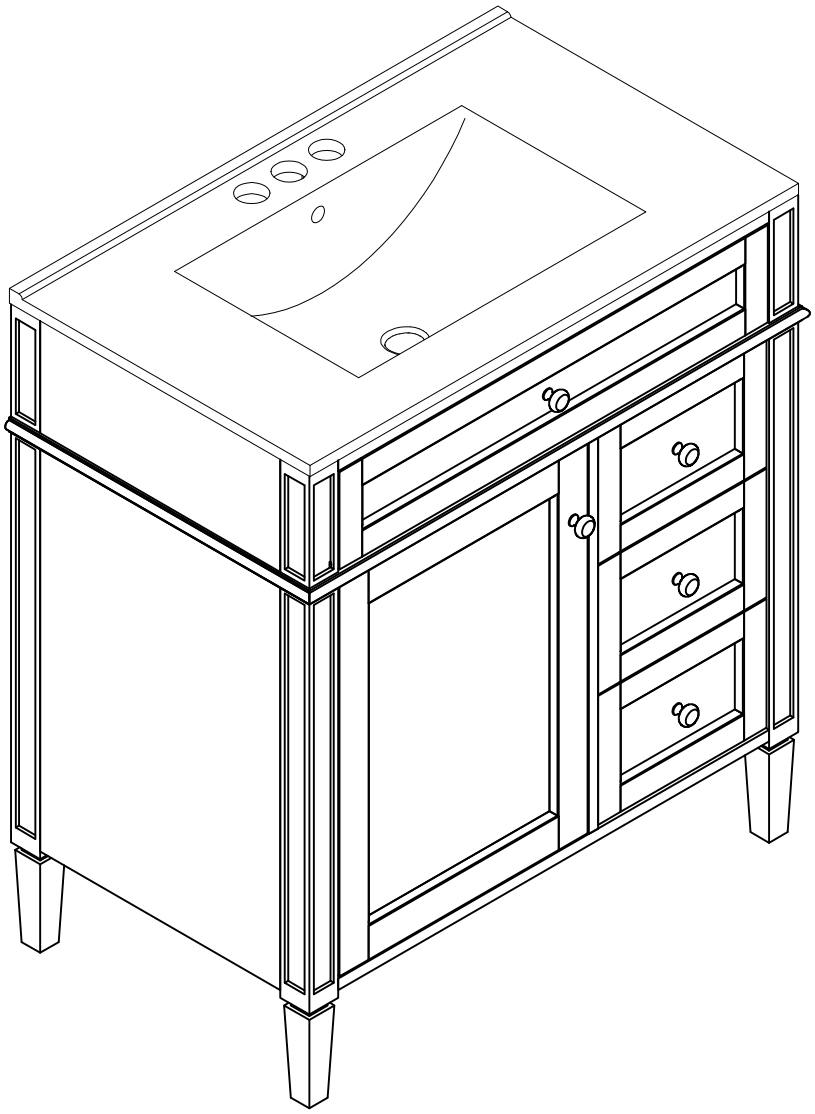

HINGE ADJUSTMENTS

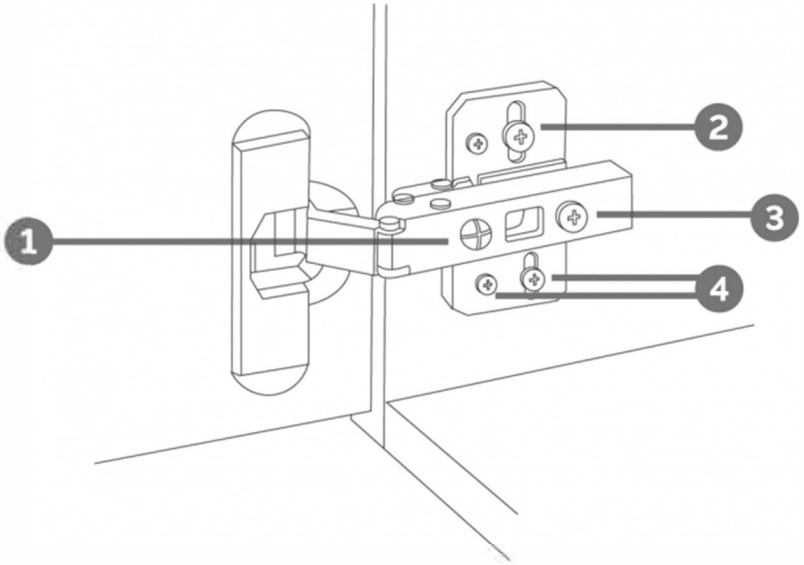

1 Sideways / Tilt adjustment

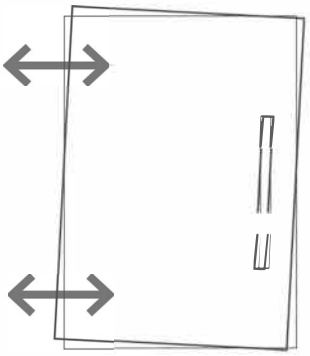

Turn the screw
clockwise to move the door further away from the side of the cabinet
anticlockwise to move the door closer to the side of the cabinet

2 4 Height adjustment

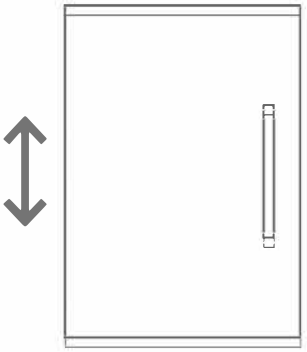

While supporting the weight of the door, turn the screws
clockwise to move the door up
anticlockwise to move the door down

3 Forward and back adjustment

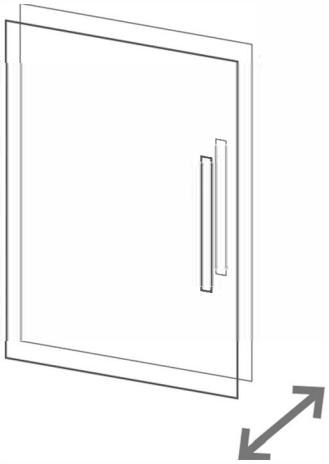

If the gap between the back of the door and the cabinet is too small, and the door may not close fully. Turn the screw
clockwise to decrease the gap between the door and the cabinet
anticlockwise to increase the gap between the door and the cabinet