6 Drawer Dresser

Finish: Andover Oak

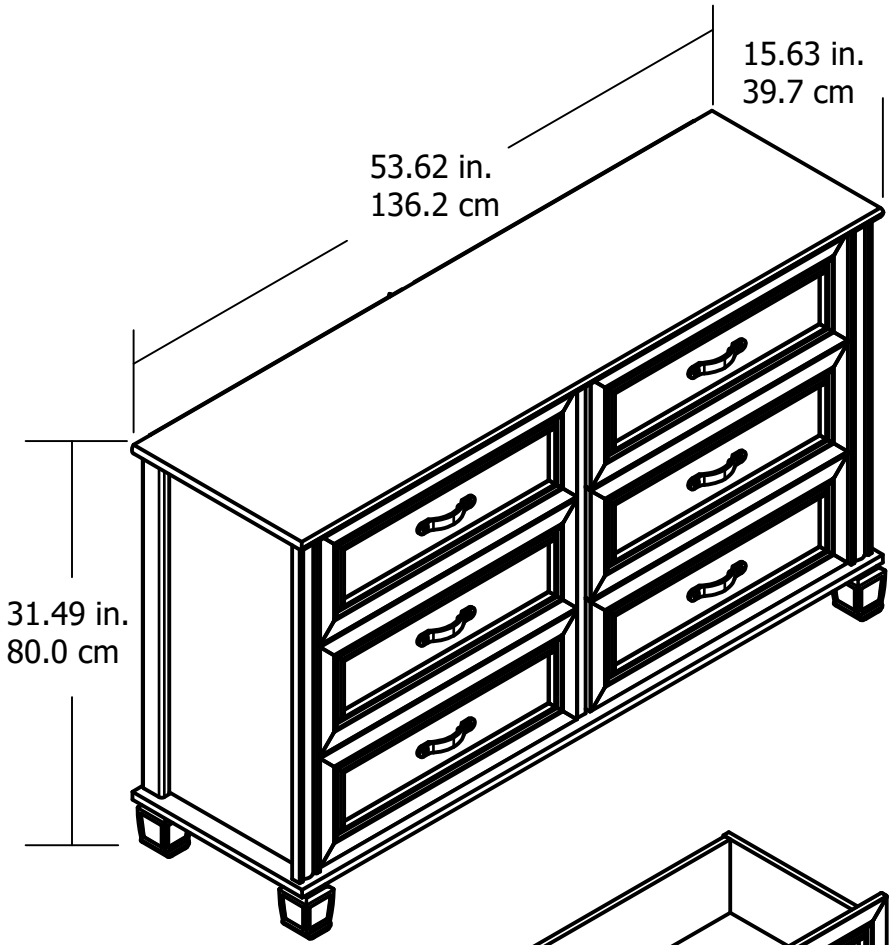

Interior Drawer dimensions:
22.1 in. (56.1 cm) W
6.3 in. (16.0 cm) H
13 in. (33.0 cm) D
1.05 cubic feet each storage area

Wood Breakdown: 95%
Total storage: 6.3 cubic feet

Overall Product Size:
53.62"W x 15.63"D x 31.49"H
136.2cm W x 39.7cm D x 80.0cm H

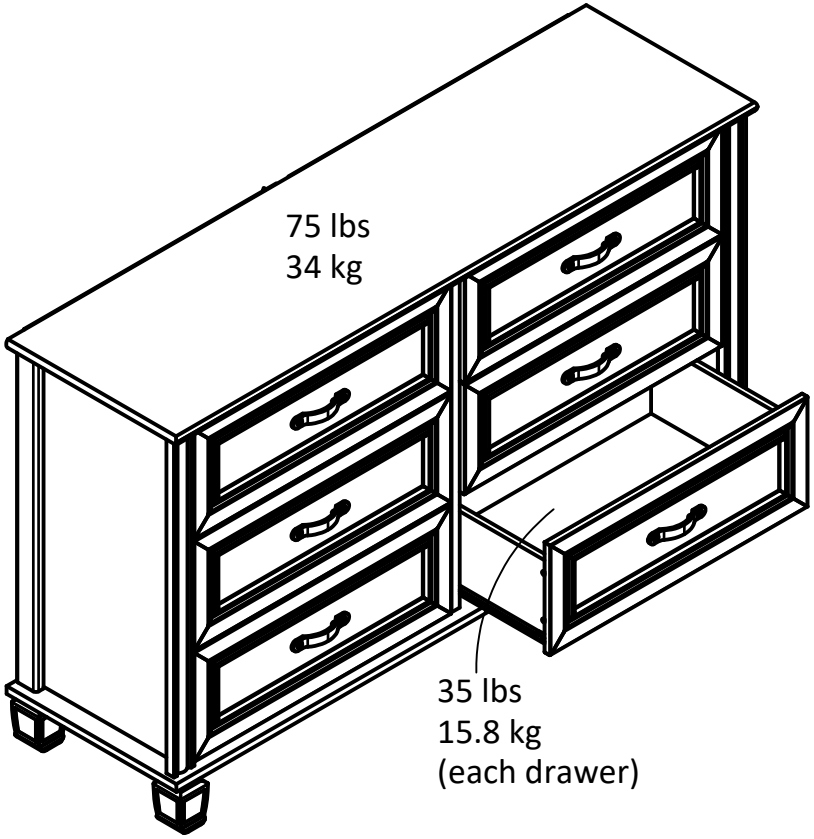

Maximum Weight Capacities
Unit Weight: 123 lbs. (55.8 kg)