Installation Manual

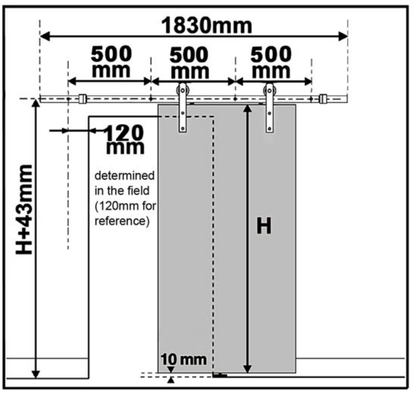

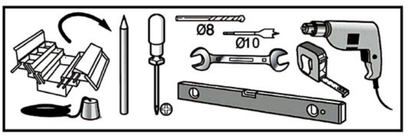

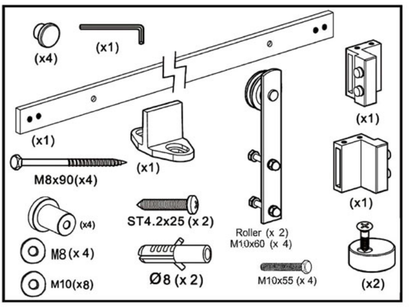

1

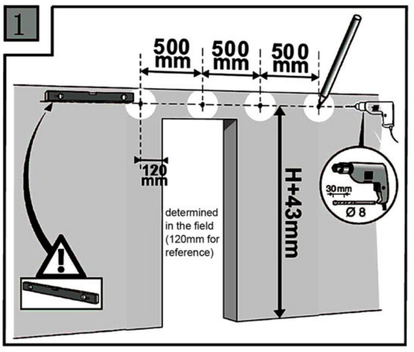

3

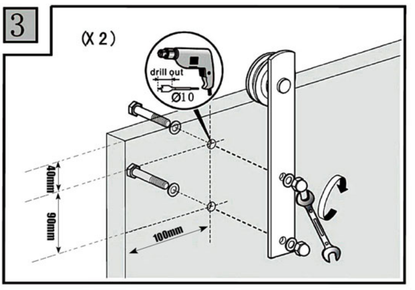

2

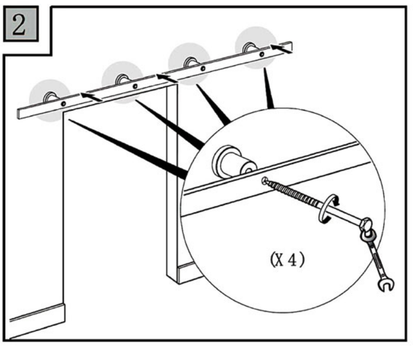

4

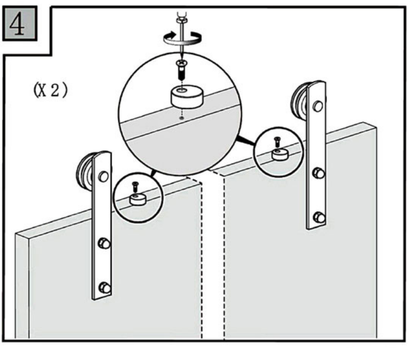

051817

5

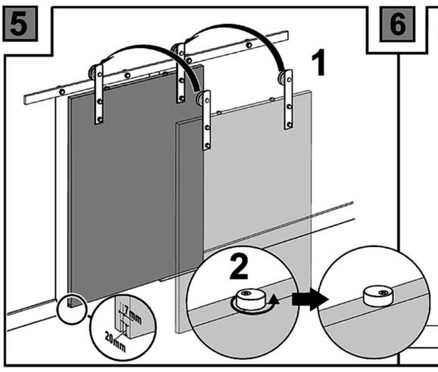

6

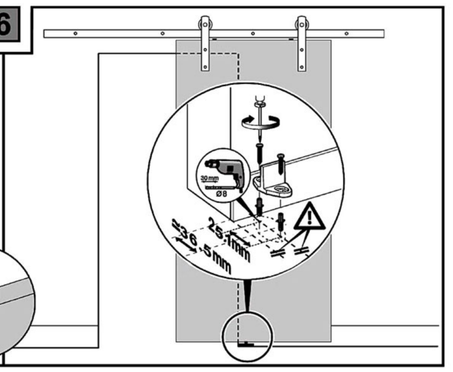

7

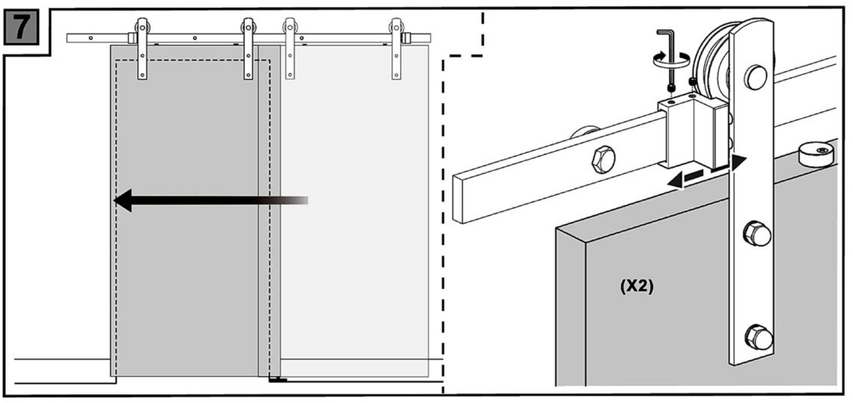

8

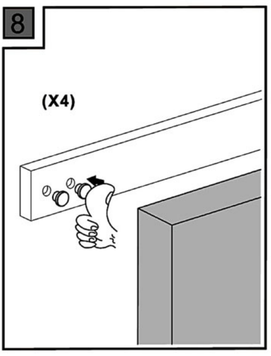

1 inch=2.54cm
1830=6′
1830=72"
500=19.69"
120=4.72"
43=1.69"
10=0.39"
40=1.57"
90=3.54"
100=3.94"
7=0.28"
20=0.79"
30=1.18"
25.1=0.99"
36.5=1.44"