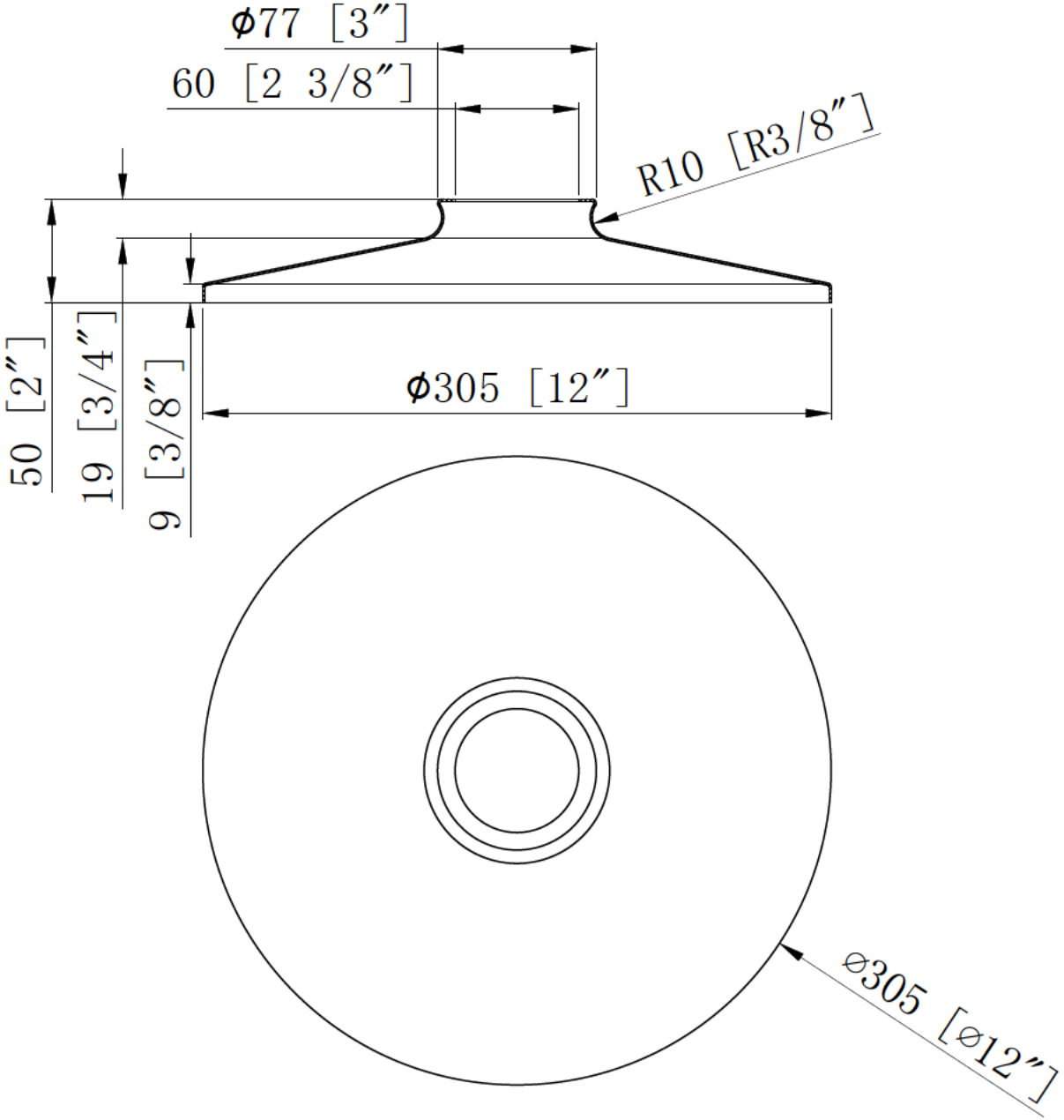

ITEM#:

NO.	PART NO.	DESCRIPTION	REQ.

DRAWN IN THIRD ANGLE PROJECTION

"mm" DIMENSION INDICATED IN [ ]
DIMENSION IN [ ] IS FOR REF. ONLY
TOLERANCES (EXCEPT AS NOTED)

DECIMAL	ANGULAR	FRACTIONAL	SCALE
NONE ±.031 .X ±.015 .XX ±.010 .XXX ±.005	± 1/2°	± 1/32	1:2

DATE	DRAWN BY	CHECKED BY	APPROVED BY
12/16/2020	SSL	X	X

TITLE

PART NO. REV.

ITEM NO. REV. A