User's Manual

INSTALLATION INSTRUCTIONS

Installation Manual

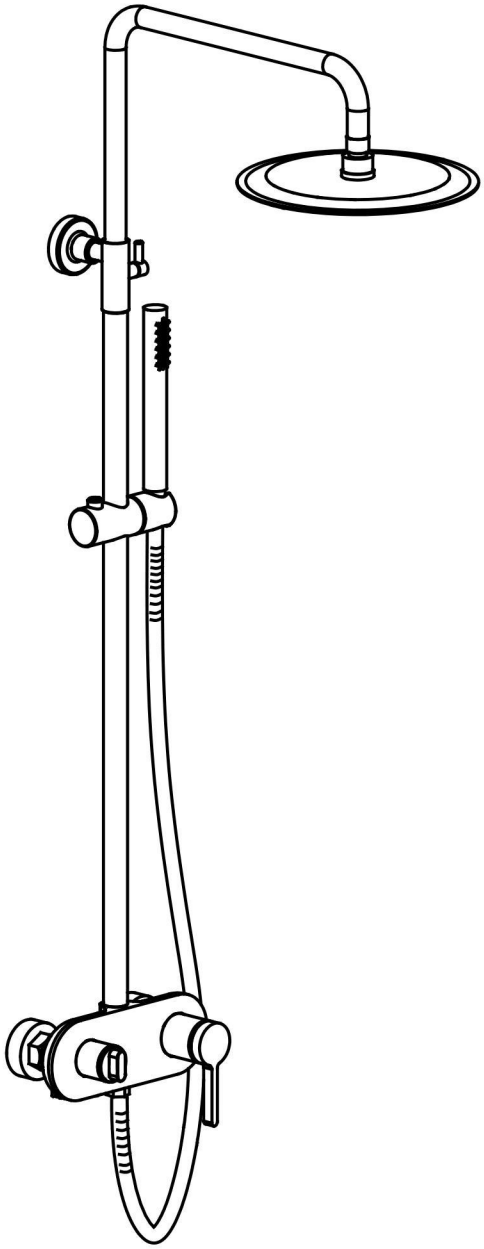

IAPMO RESEARCH AND TESTING, INC.

5001 East Philadelphia Street, Ontario, California 91761-2816 – USA • 909-472-4100 • 909-472-4244 • www.iapmort.org

ISO/IEC 17065 Product Certification Body #0202

SCC Accredited As an Accredited CCN

CERTIFICATE OF LISTING

IAPMO Research and Testing, Inc. is a product certification body which tests and inspects samples taken from the supplier's stock or from the market or a combination of both to verify compliance to the requirements of applicable codes and standards. This activity is coupled with periodic surveillance of the supplier's factory and warehouses as well as the assessment of the supplier's Quality Assurance System. This listing is subject to the conditions set forth in the characteristics below and is not to be construed as any recommendation, assurance or guarantee by IAPMO Research and Testing, Inc. of the product acceptance by Authorities Having Jurisdiction.

This certificate is not evidence of current listing. To verify listing status, visit the IAPMO R&T Product Listing Directory at pld.iapmo.org

Effective Date: December 2019 -Rev. 2/24/2020- Void After: December 2024

Product: Flexible Water Connectors File No. 5311

Issued To: Fanski Group Inc.
Mechanical & Electrical
Industrial Zone,
Yuhuan County,
Yuhuan 317600, ZHEJIANG
China

Identification: Products shall be marked with manufacturer's name or trademark, a statement "For use with water in accessible locations only." The products shall also bear the cUPC® certification mark. Markings shall be by means of either a permanent mark on the product, a label on the product or a tag attached to the product.

Characteristics: Flexible water connectors manufactured in various sizes, lengths and metal end fittings for hot or cold water applications that consist of an inner tube, which may or may not have an outer braided cover. Connectors are to be installed for use in accessible locations only. To be installed in accordance with the manufacturer's instruction, and the latest edition of the Uniform Plumbing Code and National Plumbing Code of Canada.

Products listed on this certificate have been tested by an IAPMO R&T recognized laboratory. This recognition has been granted based upon the

Chairman, Product Certification Committee — CEO, The IAPMO Group

This listing period is based upon the last date of the month indicated on the Effective Date and Void After Date shown above. Any change in material, manufacturing process, marking or design without having first obtained the approval of the Product Certification Committee, or any evidence of non-compliance with applicable codes and standards or of inferior workmanship, may be deemed sufficient cause for revocation of this listing. Production of or reference to this form for advertising purposes may be made only by specific written permission of IAPMO Research and Testing, Inc. Any alteration of this certificate could be grounds for revocation of the listing. This document shall be reproduced in its entirety.

IAPMO RESEARCH AND TESTING, INC.

5001 East Philadelphia Street, Ontario, California 91761-2816 – USA • 909-472-4100 • 909-472-4244 • www.iapmort.org

ISO/IEC 17065 Product Certification Body #0202

SCC Accredited As an Accredited CCN

CERTIFICATE OF LISTING

IAPMO Research and Testing, Inc. is a product certification body which tests and inspects samples taken from the supplier's stock or from the market or a combination of both to verify compliance to the requirements of applicable codes and standards. This activity is coupled with periodic surveillance of the supplier's factory and warehouses as well as the assessment of the supplier's Quality Assurance System. This listing is subject to the conditions set forth in the characteristics below and is not to be construed as any recommendation, assurance or guarantee by IAPMO Research and Testing, Inc. of the product acceptance by Authorities Having Jurisdiction.

This certificate is not evidence of current listing. To verify listing status, visit the IAPMO R&T Product Listing Directory at pld.iapmo.org

Effective Date: November 2019 Void After: November 2024

Product: Plumbing Fixture Fittings File No. 10633

Issued To: Aqua Gallery Co.,ltd
11th-15th A10 Block
International Ceramics&
Sanitary City, 528000
Foshan,
China

Identification: Plumbing supply fittings complying with this Standard shall be marked with the manufacturer's recognized name, trademark, or other mark or, in the case of private labeling, the name, trademark or other mark of the customer for whom the fitting was manufactured. The marking shall be accomplished by use of a permanent mark or by placing a permanent label on the product. Markings on plumbing supply fittings shall be visible after installation.

Single-handle, single-control, and automatic compensating mixing bath and shower valves shall have identifiable temperature control settings in which the settings are indicated by words ("cold", "warm", "hot", etc.), by numbers, or graphically.

Packages shall be marked with the manufacturer's name, trademark, or other mark as well as the model number or, in the case of private

Chairman, Product Certification Committee — CEO, The IAPMO Group

This listing period is based upon the last date of the month indicated on the Effective Date and Void After Date shown above. Any change in material, manufacturing process, marking or design without having first obtained the approval of the Product Certification Committee, or any evidence of non-compliance with applicable codes and standards or of inferior workmanship, may be deemed sufficient cause for revocation of this listing. Production of or reference to this form for advertising purposes may be made only by specific written permission of IAPMO Research and Testing, Inc. Any alteration of this certificate could be grounds for revocation of the listing. This document shall be reproduced in its entirety.

IAPMO RESEARCH AND TESTING, INC.

5001 East Philadelphia Street, Ontario, California 91761-2816 – USA • 909-472-4100 • 909-472-4244 • www.iapmort.org

ISO/IEC 17065 Product Certification Body #0202

SCC Accredited As an Accredited CCN

COMPONENT

CERTIFICATE OF LISTING

IAPMO Research and Testing, Inc. is a product certification body which tests and inspects samples taken from the supplier's stock or from the market or a combination of both to verify compliance to the requirements of applicable codes and standards. This activity is coupled with periodic surveillance of the supplier's factory and warehouses as well as the assessment of the supplier's Quality Assurance System. This listing is subject to the conditions set forth in the characteristics below and is not to be construed as any recommendation, assurance or guarantee by IAPMO Research and Testing, Inc. of the product acceptance by Authorities Having Jurisdiction.

This certificate is not evidence of current listing. To verify listing status, visit the IAPMO R&T Product Listing Directory at pld.iapmo.org

Effective Date: March 2019 Void After: March 2024

Product: Plumbing Fixture Fittings - Components File No. MC-9703

Issued To: Ningbo Wanhai Cartridge Technology Co., Ltd.
Xiachen Zone, Chunhu
Penghua, NINGBO 315538
China

Identification: Each fitting component shall bear permanent legible markings to identify the manufacturer. This marking shall be the trade name, trademark, or other mark known to identify the manufacturer. The product shall also bear all other markings required by the standard. The marking shall be applied so as to be visible after installation. The product or packaging shall also bear the cUPC® certification mark along with the term "COMPONENT" above.

Characteristics: Plumbing fixture fitting components to be installed in accordance with the manufacturer's instructions and the requirements of the latest edition of the Uniform Plumbing Code.

Products listed on this certificate have been tested by an IAPMO R&T recognized laboratory. This recognition has been granted based upon the laboratory's compliance to the applicable requirements of ISO/IEC 17025.

Products are in compliance with the following code(s):
Uniform Plumbing Code (UPC®)

Chairman, Product Certification Committee — CEO, The IAPMO Group

This listing period is based upon the last date of the month indicated on the Effective Date and Void After Date shown above. Any change in material, manufacturing process, marking or design without having first obtained the approval of the Product Certification Committee, or any evidence of non-compliance with applicable codes and standards or of inferior workmanship, may be deemed sufficient cause for revocation of this listing. Production of or reference to this form for advertising purposes may be made only by specific written permission of IAPMO Research and Testing, Inc. Any alteration of this certificate could be grounds for revocation of the listing. This document shall be reproduced in its entirety.

INSTALLATION STEPS

This product has been inspected and debugged by the factory to the best condition. Please do not disassemble and assemble it yourself.

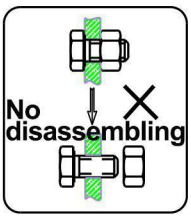

Before installing the product, please be sure to remove sundries and sludge from the water pipe to prevent sundries from blocking the product.

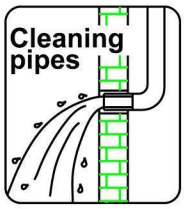

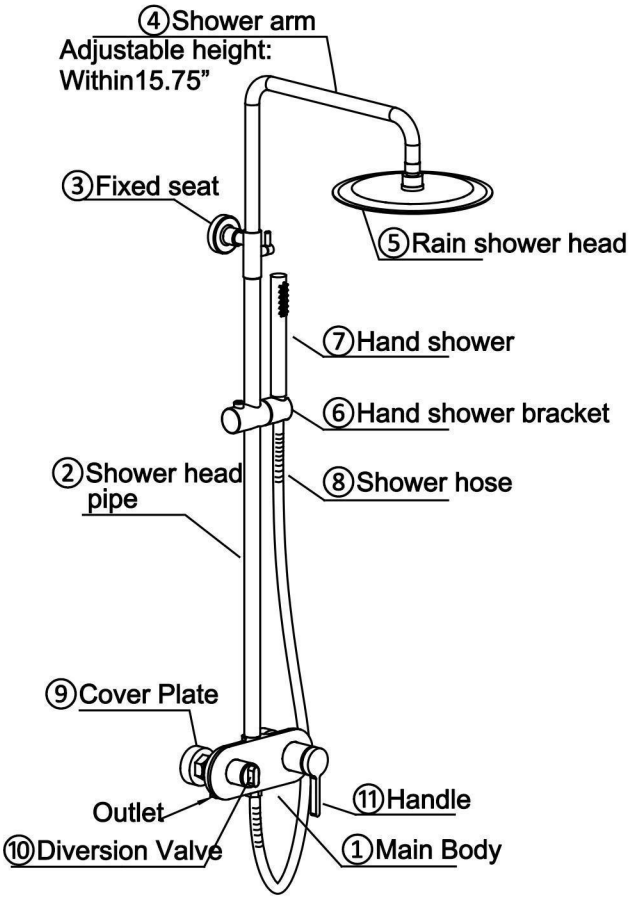

▶ installation steps

1. Drain the sewage from the hot and cold water pipes first.
2. Install the faucet ① in place, connect ② and ③, and then insert it into ① to check whether it is in place. Place ③ close to the wall, determine the fixed point, make a mark, and then drill the hole.
3. Insert ④ into ②, then fix ②, ③, ④ on the wall at the same time, and check whether the installation is stable.
4. Finally, fix ⑥ in an appropriate position, then connect ⑧ to ①, and then connect ⑦ to ⑧. Then connect ⑤ to ④. Note that the rubber pads of all connecting parts must be installed in place.
5. Finally, test the water to check whether the connecting parts are leaking. So far, the entire shower is installed.

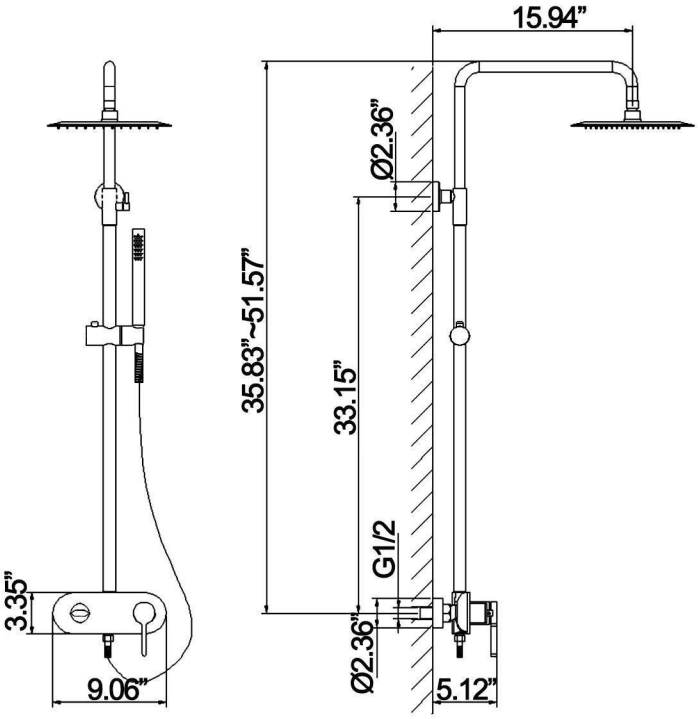

▶ Instruction of use

1. Turn on the faucet handle.
2. Rotary diversion valve, and follow the icons above switch to Rain shower head, Hand shower and faucet outlet.
3. Rotate the faucet handle left and right to adjust the temperature of hot and cold water.

CLEANING CARE

In order to keep the appearance of product clean, bright and good performance, please take care of the product as follows;

1.Rinse with water only and dry with soff cotton cloth;

2.Use mild liquid and colorless glass cleaner to remove surface dirt and scale film, or use polish without abrasive effect;

3.Do not use abrasive deterfgent, polish, emery cloth, paper towel or scraper, etc;

4.Do not use acid cleaner, or cleaner and soap with insoluble gran etc;

5.In the process of use, mud my accumulate in the bubbler and make the water flow show, The bubbler can be unscrewed, rinsed with water, and then installed back in place.