Wall Storage Cabinet

Assembly Instructions - Please keep for future reference

⚠ NOTE:

Comes with TWO PACKAGES with TWO TRACKINGS,may NOT be delivered at the same time.

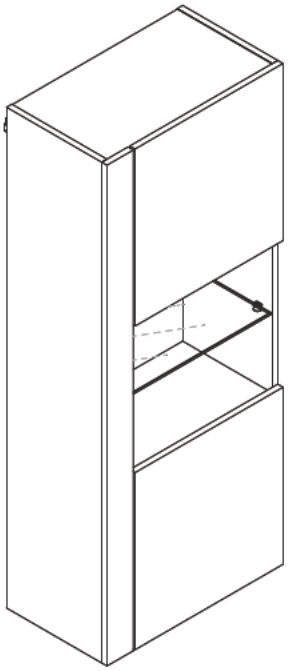

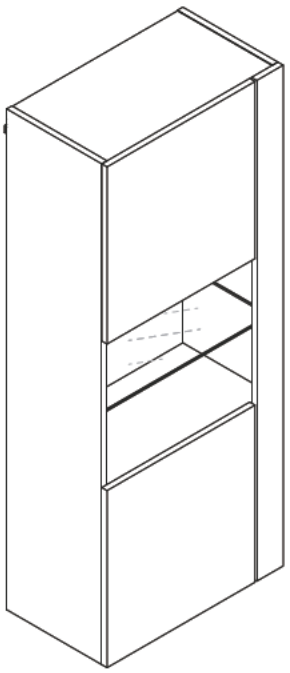

Dimensions

Width - 19.7inch
Depth - 11.2inch
Height - 47.2inch

Important – Please read these instructions fully before starting assembly

Issue 1 -20/12/2022

Safety and Care Advice

Important – Please read these instructions fully before starting assembly

• Check you have all the components and tools listed on the following pages.

• Remove all fittings from the plastic bags and separate them into their groups.

• Keep children and animals away from the work area, small parts could choke if swallowed.

• Make sure you have enough space to layout the parts before starting.

• During assembly do not stand or put weight on the product, this could cause damage.

• Assemble the item as close to its final position (in the same room) as possible.

• Assemble on a soft level surface to avoid damaging the unit or your floor.

• Parts of the assembly will be easier with 2 people.



• To reduce the likelihood of damaging your product please ensure that your power drill is set on a low torque setting.

Care and maintenance

• Only clean using a damp cloth and mild detergent, do no use bleach or abrasive cleaners.

• From time to time check that there are no loose screws on this unit.

• This product should not be discarded with household waste. Take to your local authority waste disposal centre.

Handy Hints

• Assemble all parts and bolts loosely during assembly, only once the product is complete should you fully tighten the bolts

• Regularly check and ensure that all bolts and fittings are tightend properly.

WARNING

In order to help prevent overturning – please follow these instructions

To help prevent product toppling over please follow the steps below:

- Must use the anti tip strap or wall fixing method provided (whichever applies).
- Do not allow children to climb or hang on the furniture.
- Do not place heavy items on top of the furniture, unless the furniture has been designed for this purpose
- Installation shall be carried out exactly according to the instructions - otherwise a safety risk can occur
- In order to prevent falling down this product must be used with the wall attachment device provided.

Please note that only the wall attachment device is provided. You will need to supply wall plugs and screws applicable for your wall type.

Components - Panels

Please check you have all the panels listed below

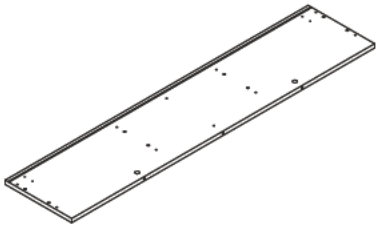

1 (120 x 27 x 1.5cm) x 2

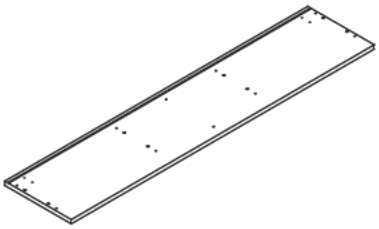

2 (120 x 27 x 1.5cm) x 2

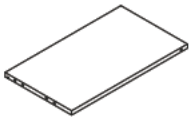

3 (47 x 26.9 x 1.5cm) x 1

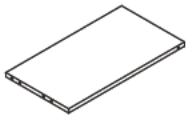

4 (47 x25.4 x 1.5cm) x 2

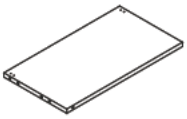

5 (47 x 25.4 x 1.5cm) x 1

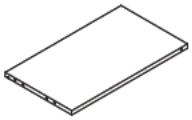

6 (47 x 26.9 x 1.5cm) x 1

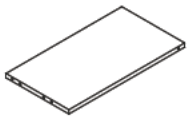

7 (47 x 25.4 x 1.5cm) x 2

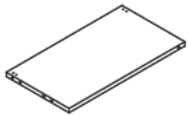

8 (47x 25.4 x 1.5cm) x 1

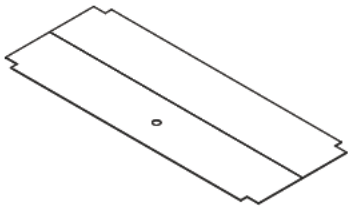

9 (118.9 x 48 x 0.25cm) x 2



10 (46.3 x 24.2 x 0.6cm) x 2

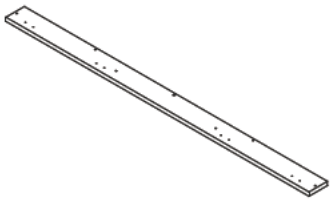

11 (120 x 7.5 x 1.5cm) x 2

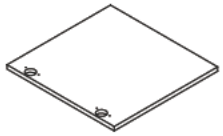

12 (42 x 42 x 1.5cm) x 4

Components - Fittings

Please check you have all the fittings listed below

Note: The quantities below are the correct amount to complete the assembly. In some cases more fittings may be supplied than are required.

A  8*30mm Wooden Dowelx 34	**B**  7*39mm Cam Bolt x 44	**C**  Cam Lock x 44
D  4*30mm Screw x 8	**E**  Wall attach bracket x 2	**F** 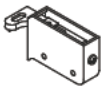 Wall attach bracket x 2
G  3*16mm Back Panel Stiffener x 10	**H**  Glass Shelf Clamp x 8	**I**  3.5*14mm Screw x 32
J  Hinge x 8	**K**  Door Bumper x 8	**L**  Metal Cleat x 4
M  Wall fixing pack x 8	**N**  3 X 12 mm Screw x 4	**O**  Wall attach bracket x 4
P  LED lights kit x 1		

Tools required



Phillips screwdriver
(medium & large)

Ruler - Use this ruler to help correctly identify the screws

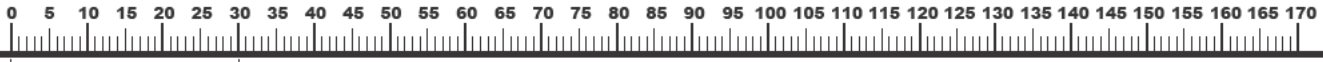

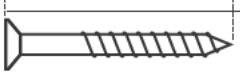

The screws length is measured from the head to the point (30mm screw shown).

Using Camlocks

Step 1

Connect the male camlock as directed in the assembly instructions using a screwdriver.

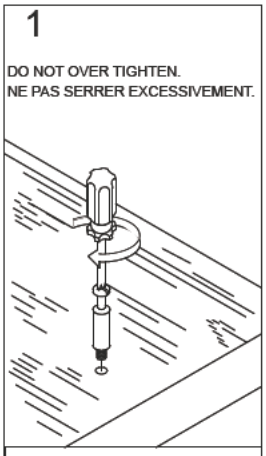

Step 2

Push the male camlock into the entry hole.

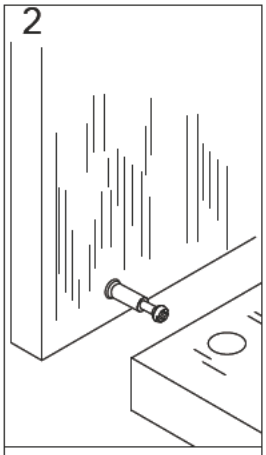

Step 3

Insert the female camlock as shown in the instructions.

Note: ensure that the arrow on the top of the camlock points towards the entry hole for the male camlock.

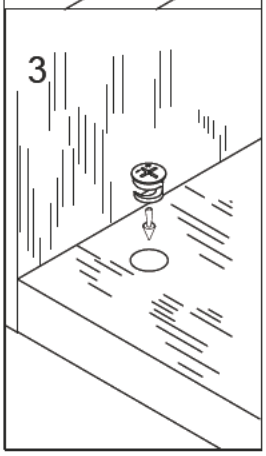

Step 4

Turn the female camlock clockwise with a screwdriver.

You should feel a click when the camlock is locked in place.

The joint is now secure.

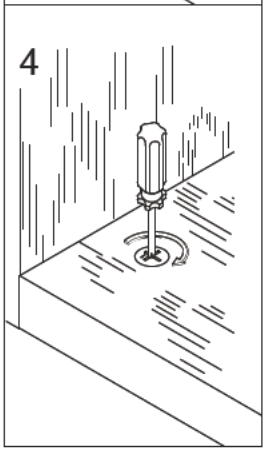

Adjusting Hinges

Hinge adjustment:

a: To move the top panel up or down, loosen screws shown and move top panel to suit

b.To move the top panel in or out, loosen screws shown and move top panel to suit.

Retighten screws

C:To move the top panel left or right, adjust screws shown.

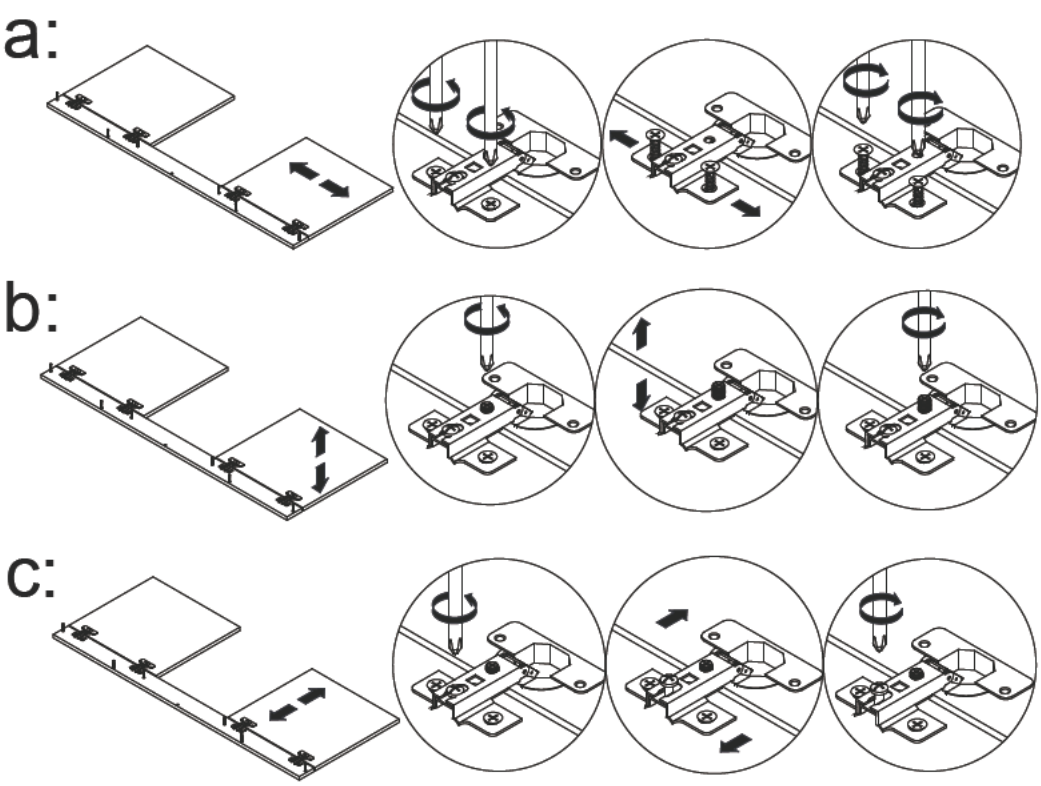

Assembly Instructions

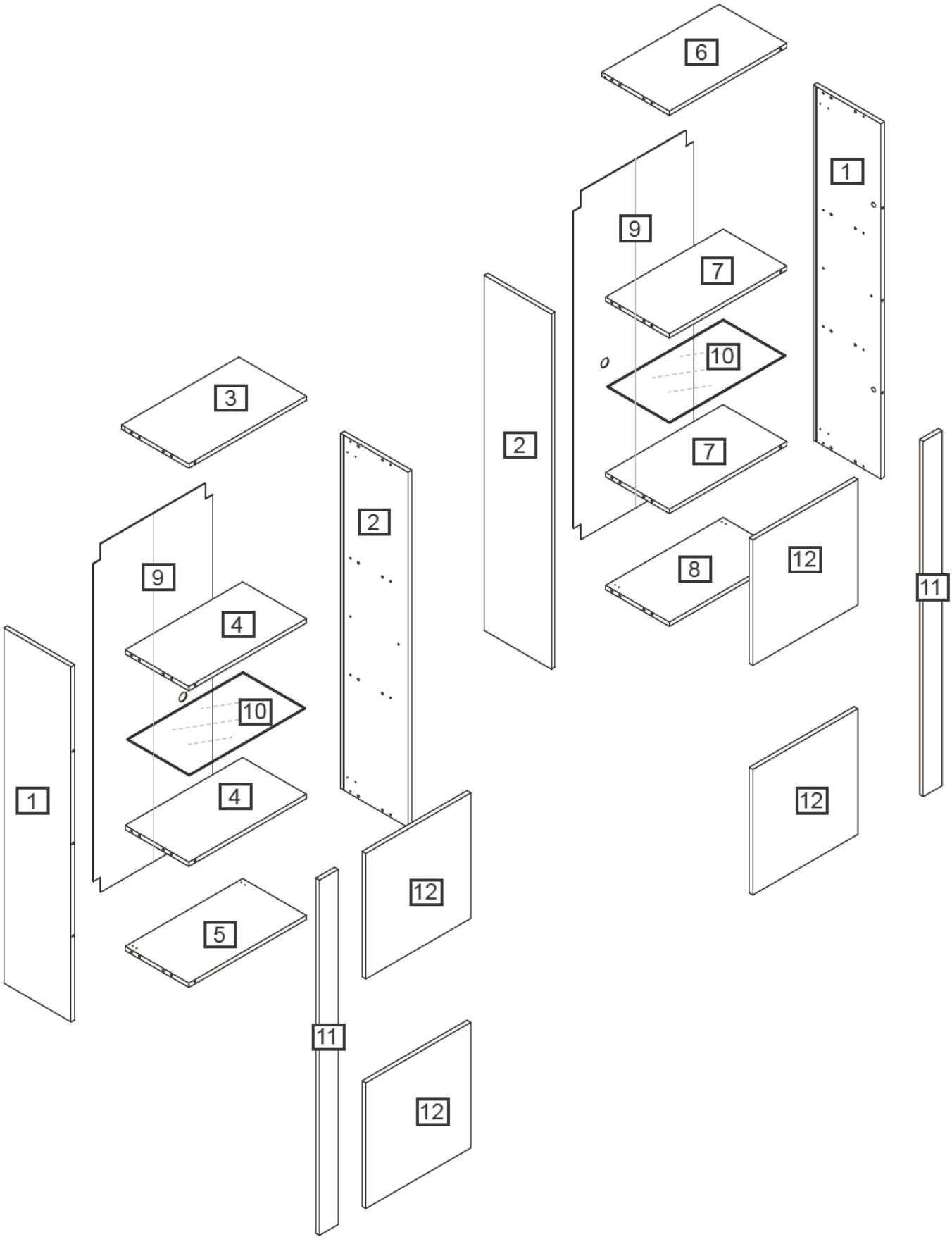

Assembly Instructions

Step 1

CAM-LOCK
Tighten until shoulder is flush with panel.Do not overtighten or undertighten(see example below)

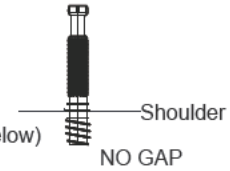

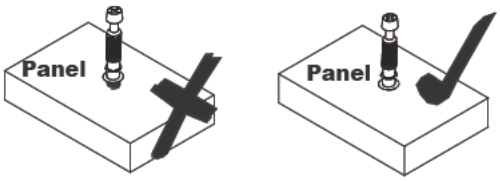

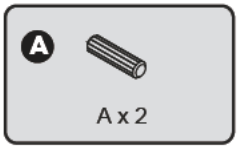

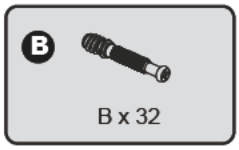

Insert wooden dowel (A) into part (1)
Attach cam bolt (B) to part (1, 2) with a screwdriver.

Assembly Instructions

Step 2

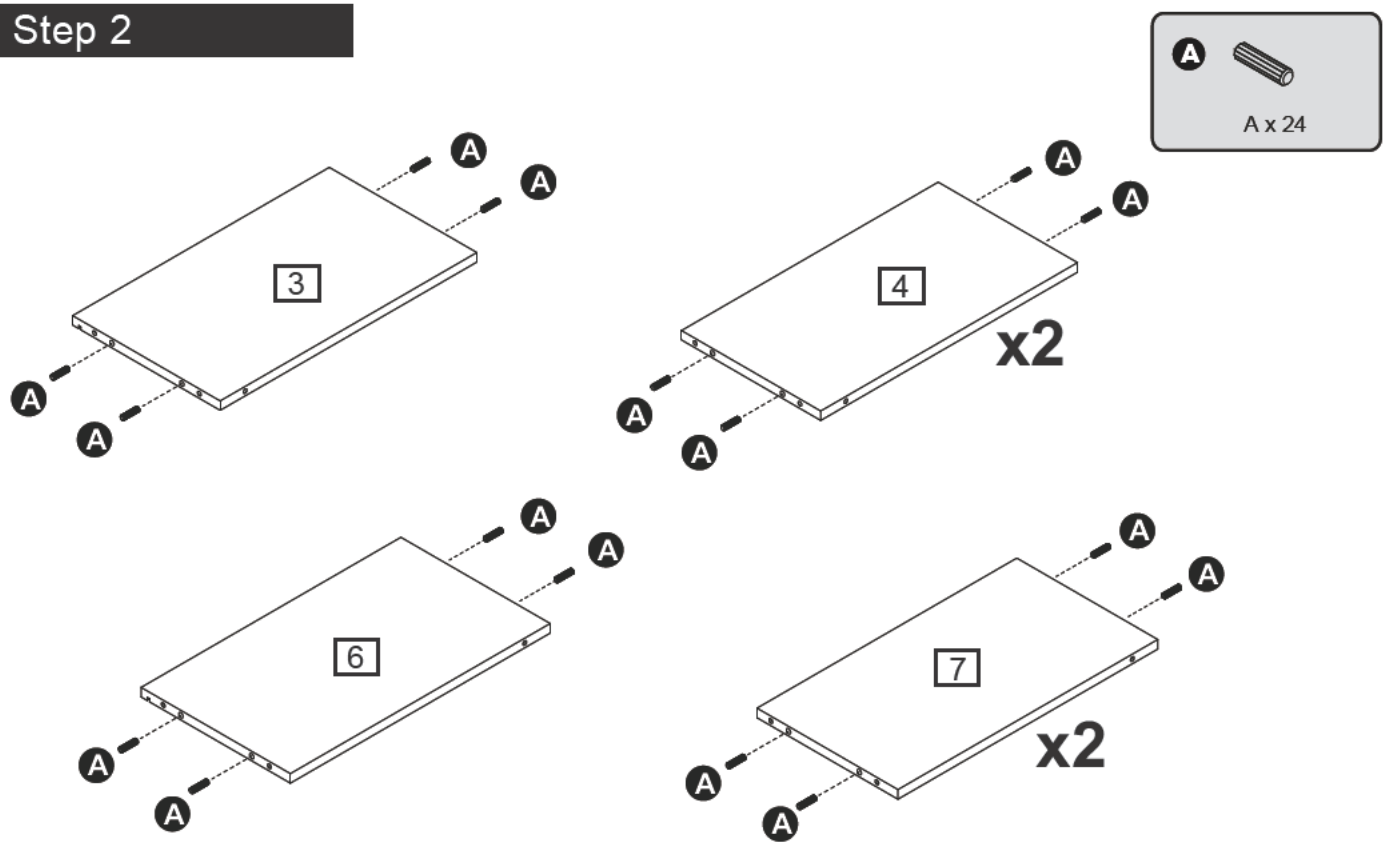

Insert wooden dowel (A) into part (3, 4, 6, 7).

Step 3

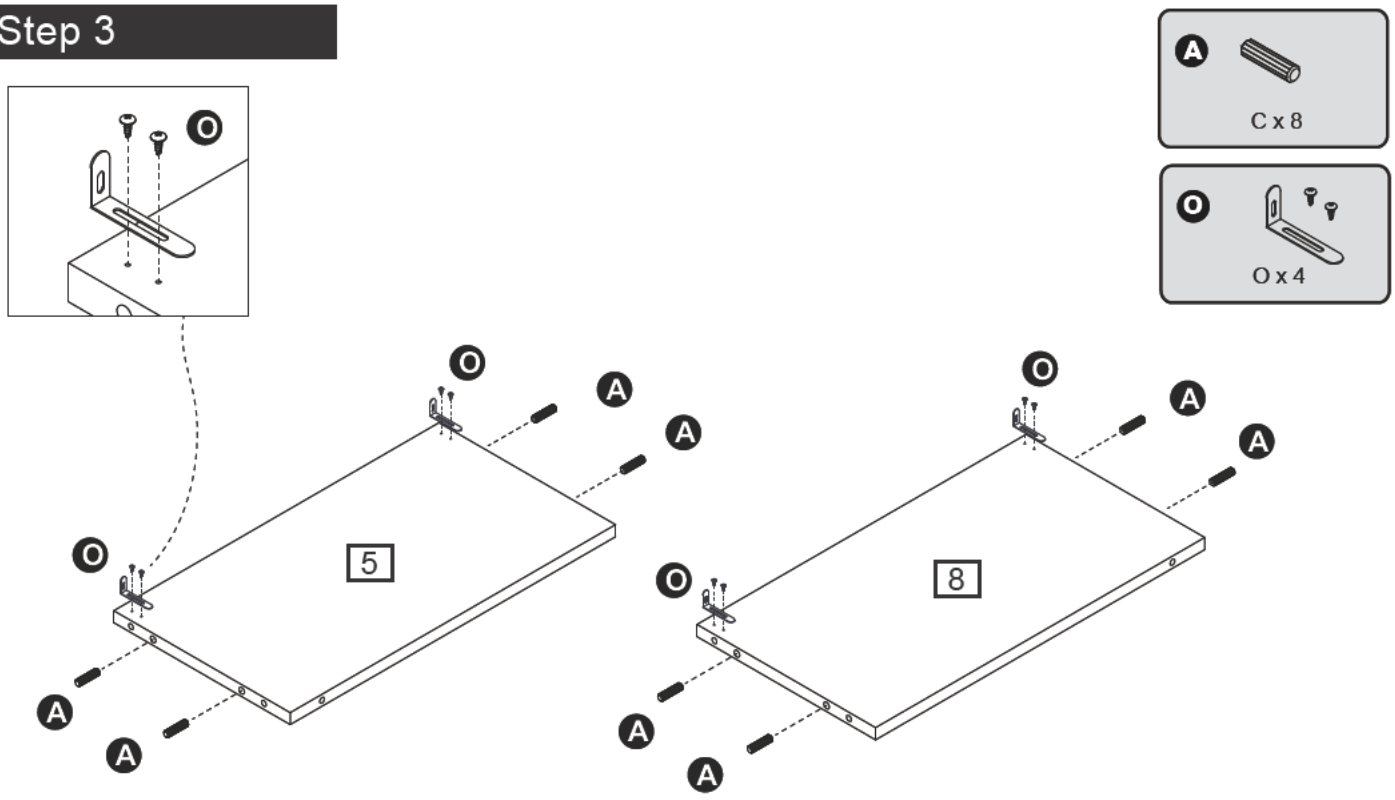

Insert wooden dowel (A) into part (5, 8).
Attach wall attach brackets (O) to part (5, 8).

Assembly Instructions

Step 4

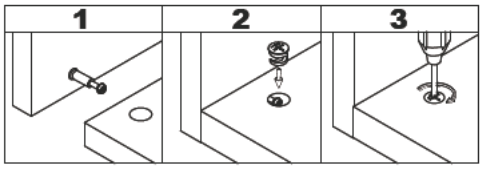

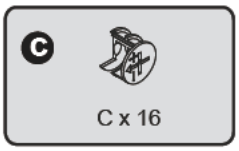

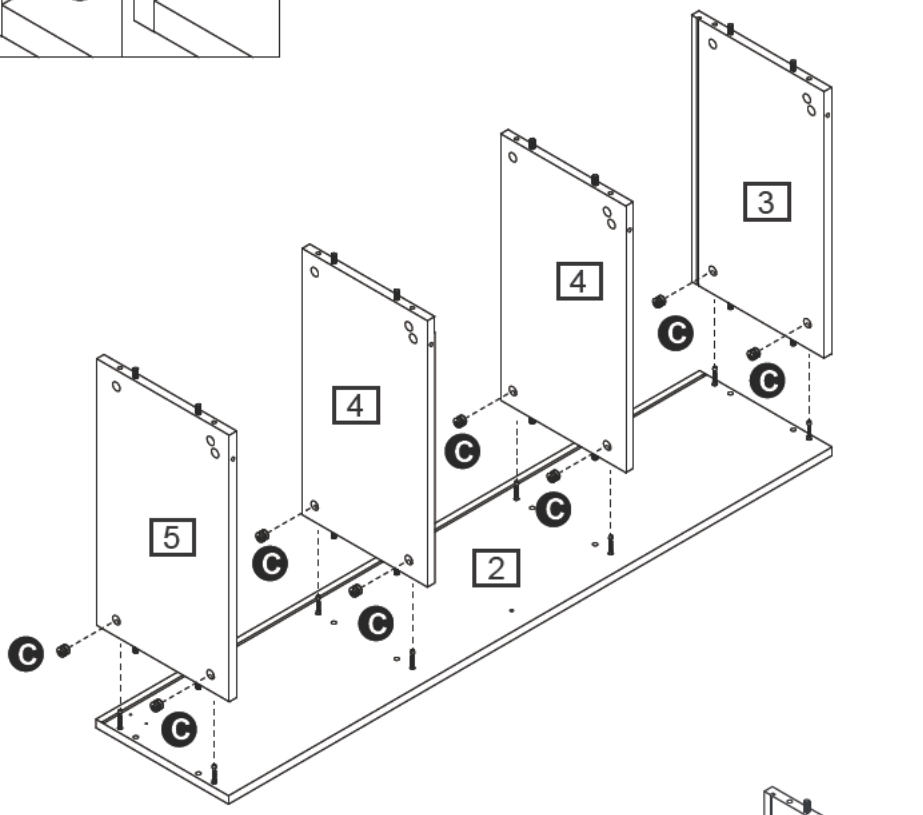

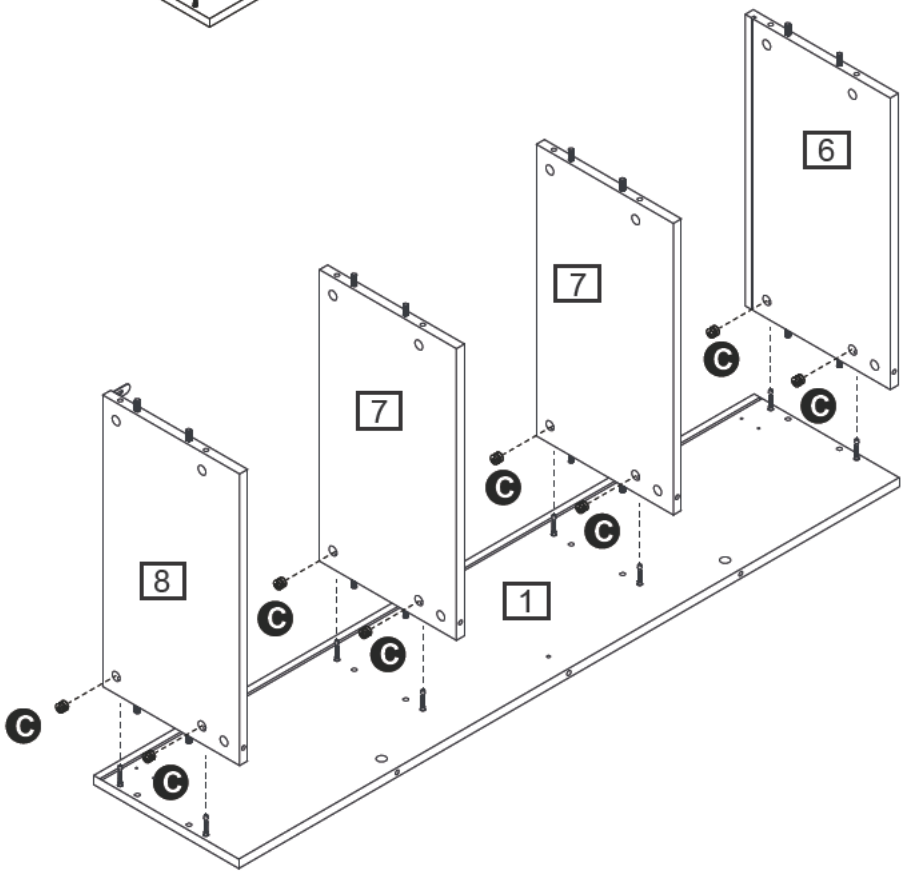

Attach part (3, 4, 5) to part (2), then insert and secure cam lock (C) to part (3, 4, 5) to lock them.
Attach part (6, 7, 8) to part (1), then insert and secure cam lock (C) to part (6, 7, 8) to lock them.

Assembly Instructions

Step 5

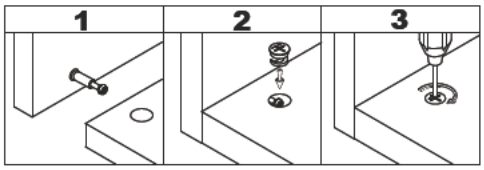



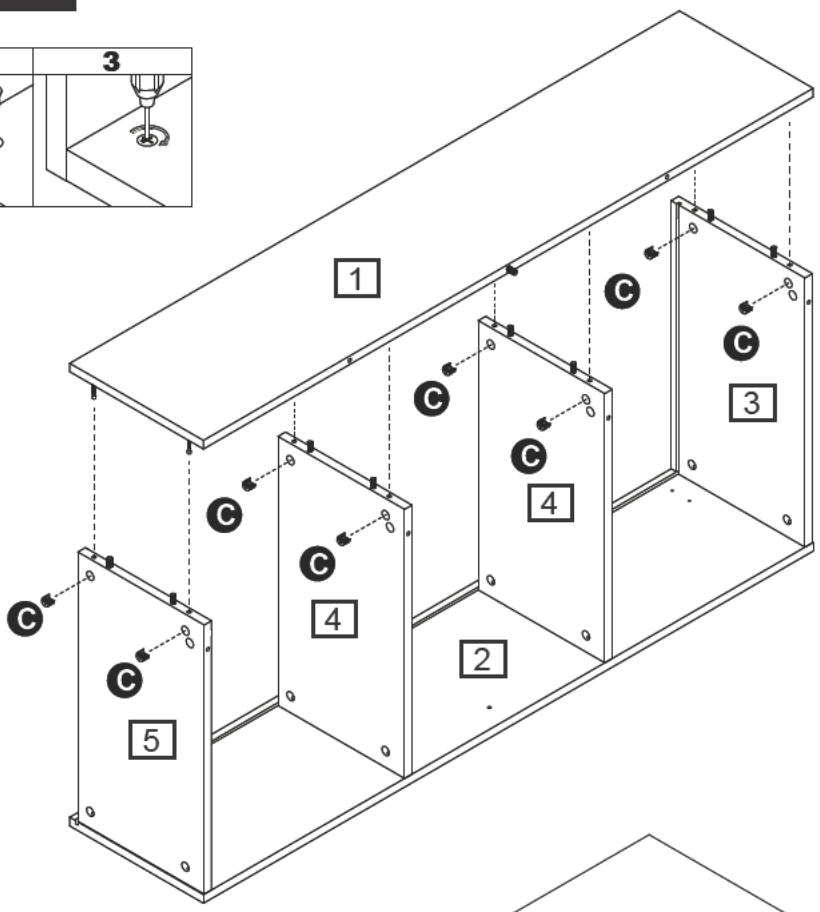

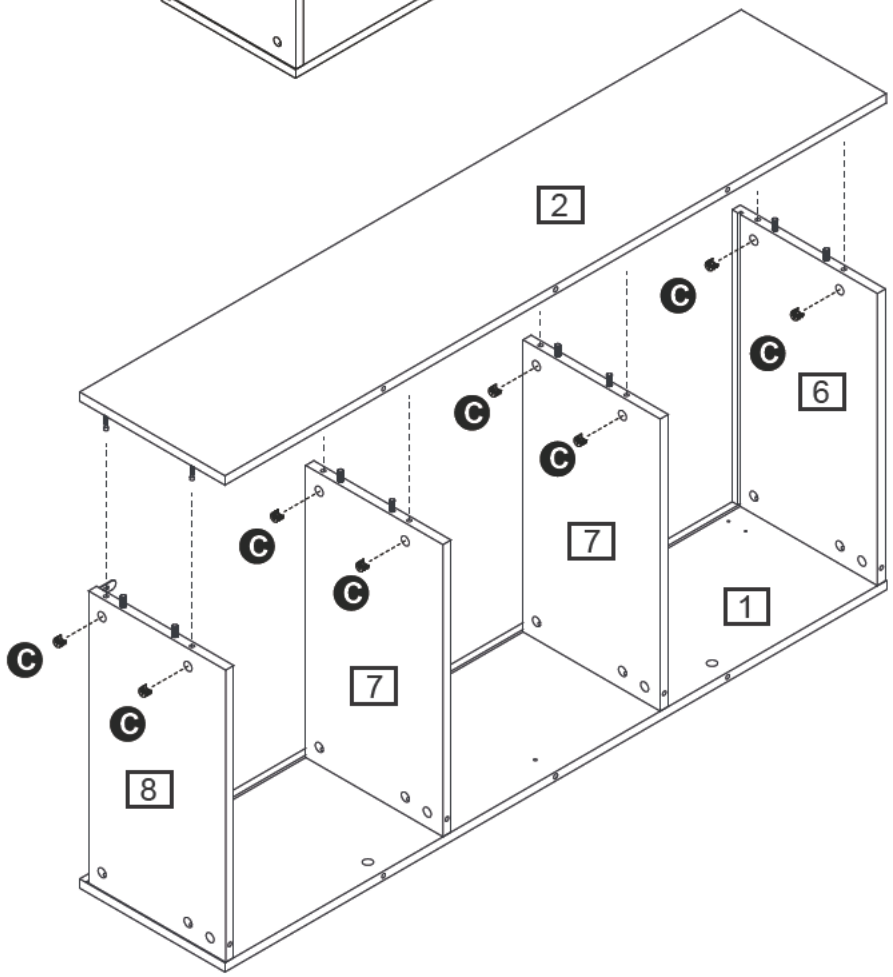

Attach part (1) to part (3, 4, 5), then insert and secure cam lock (C) to part (3, 4, 5) to lock them.
Attach part (2) to part (6, 7, 8), then insert and secure cam lock (C) to part (6, 7, 8) to lock them.

Assembly Instructions

Step 6

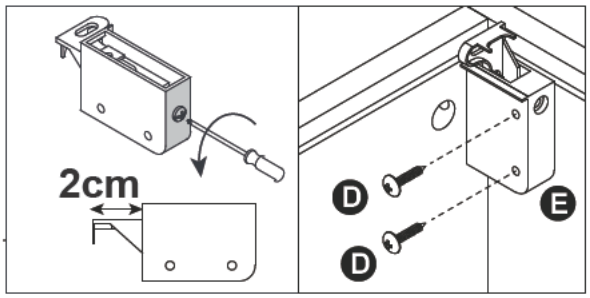

Note: Hooks of Part(E) (F) stick out 2 cm(3/4")

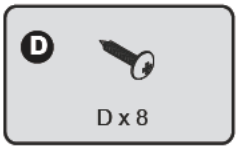

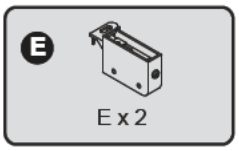

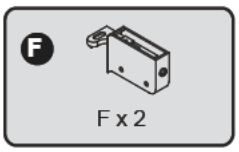

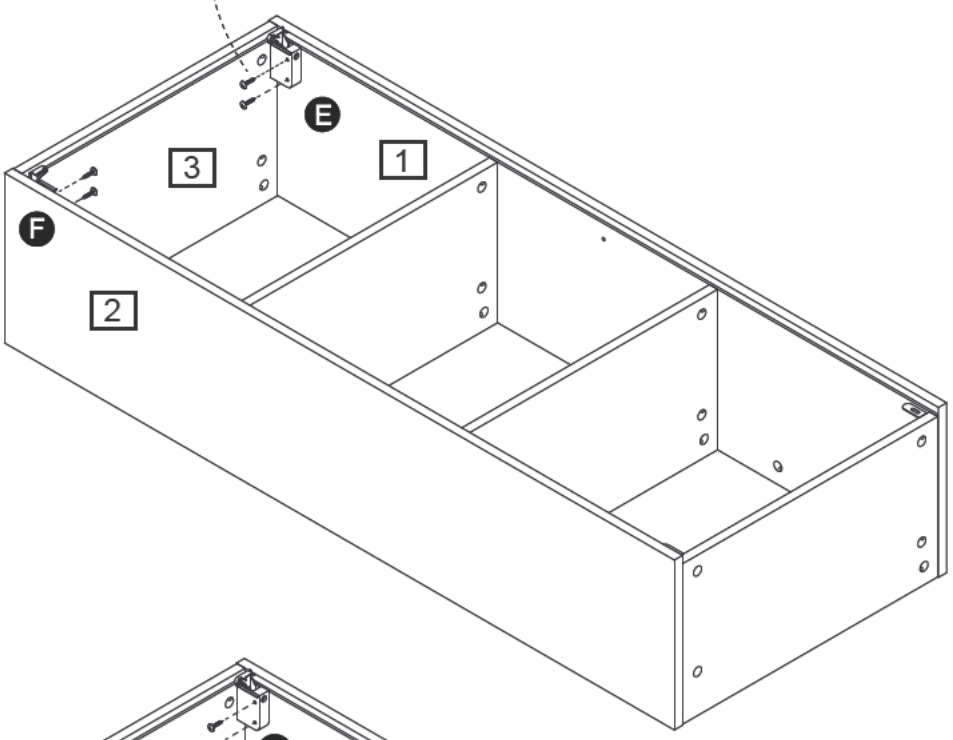

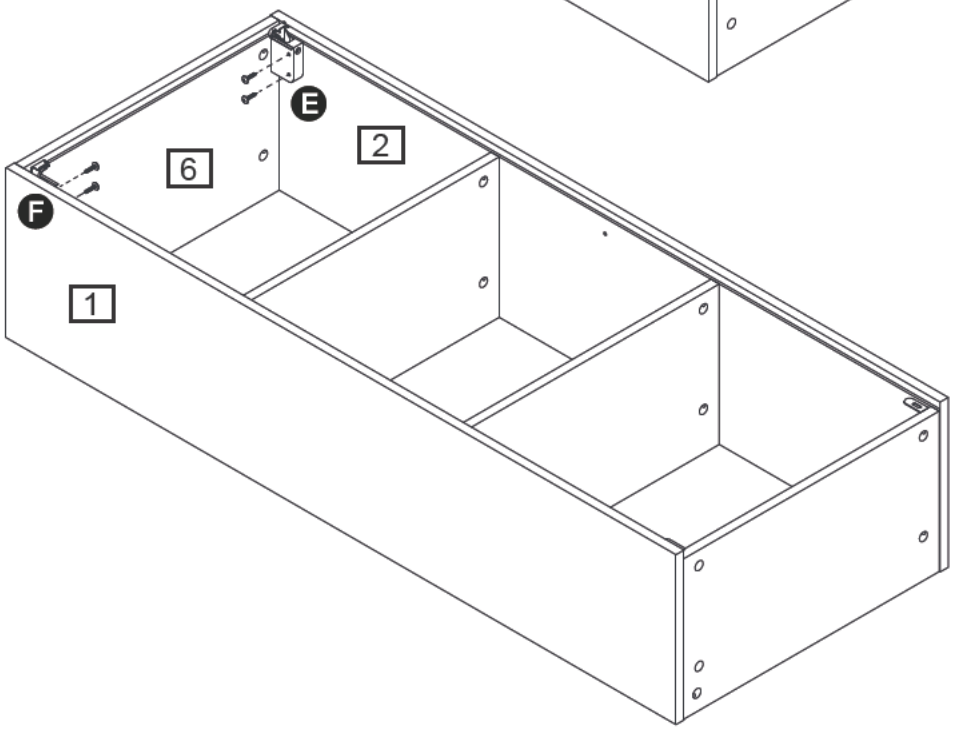

Locate part (3), and then use screw (D) to attach wall mounting bracket (E) to part (1), and wall mounting bracket (F) to part (2).
Locate part (6), and then use screw (D) to attach wall mounting bracket (E) to part (2), and wall mounting bracket (F) to part (1).

Assembly Instructions

Step 7

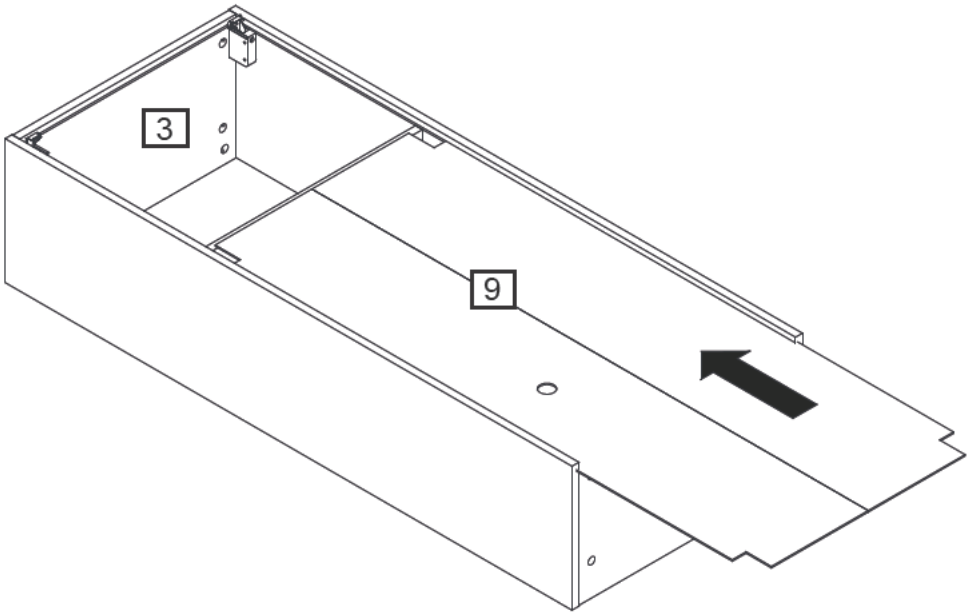

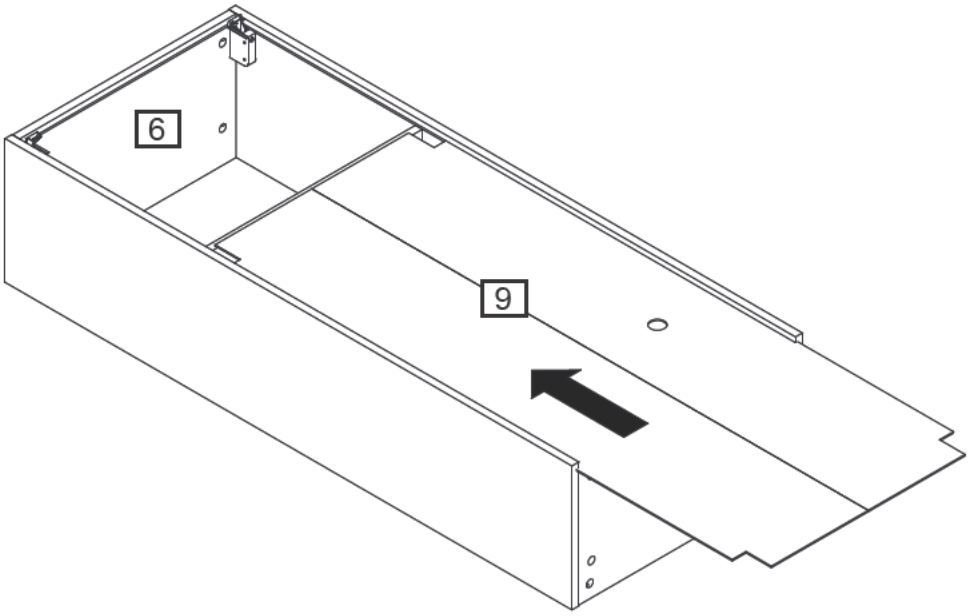

Slide the back panels (9) into grooves as per diagram.

Assembly Instructions

Step 8

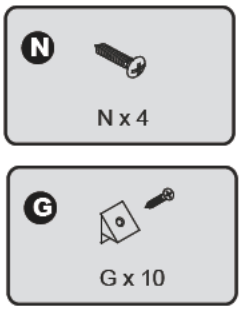

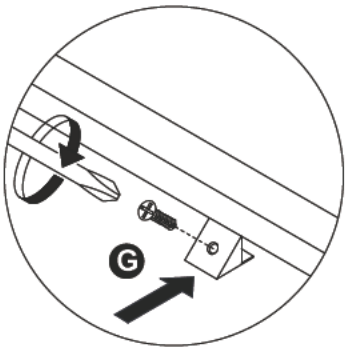

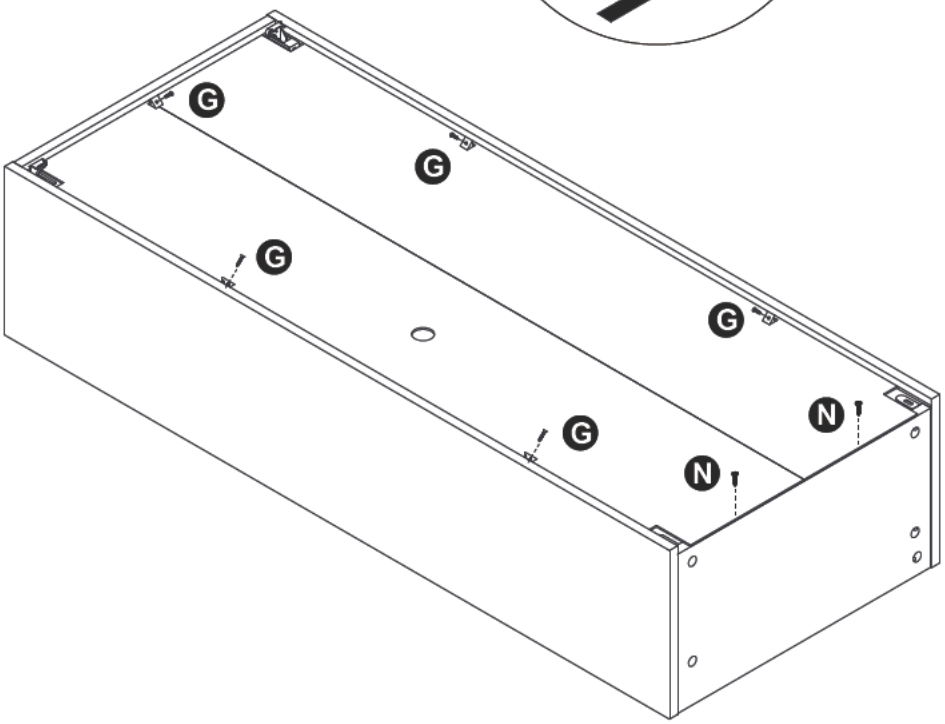

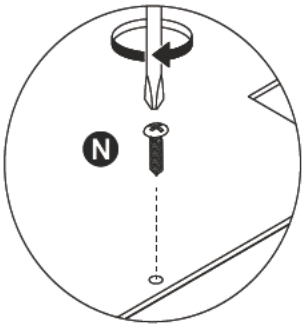

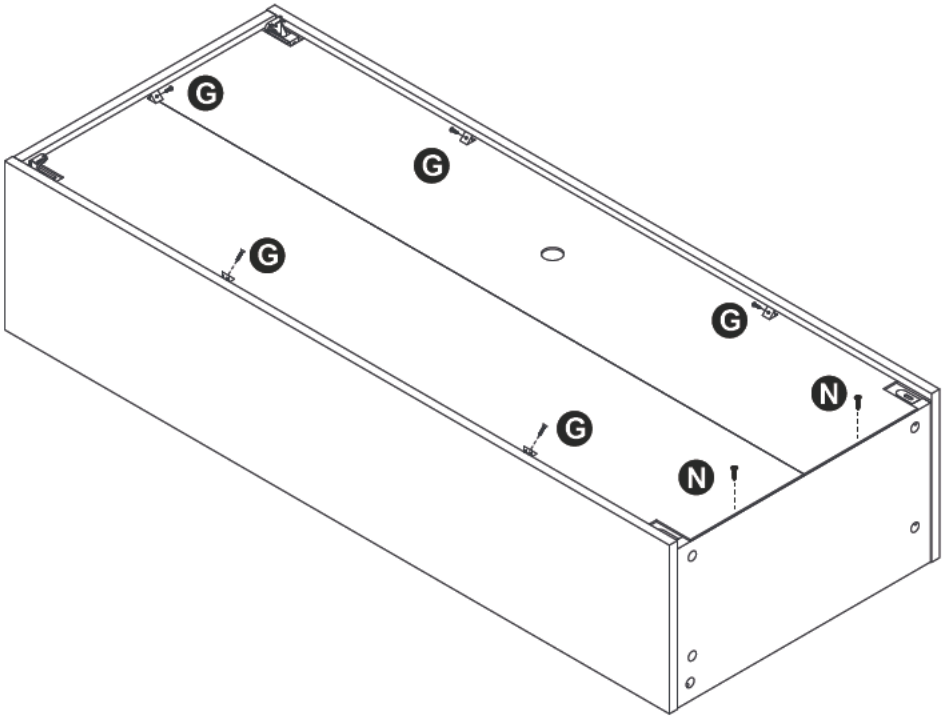

Attach plastic wedge (G) to back panels (9) using screws with a screwdriver.
Secure back panels (9) to part (5, 8) using screw (N) with a screwdriver.

Assembly Instructions

Step 9

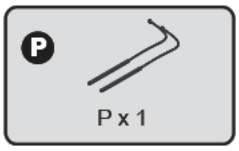

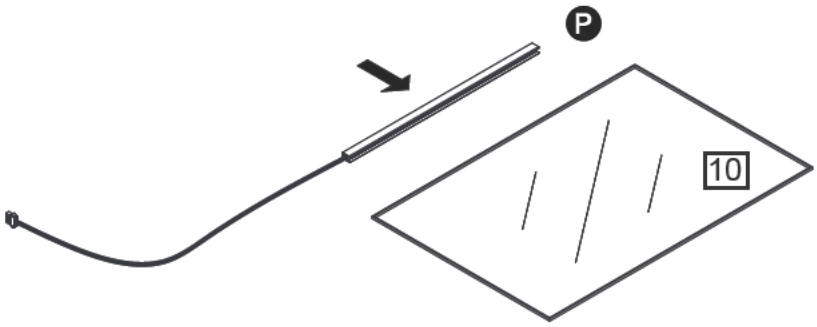

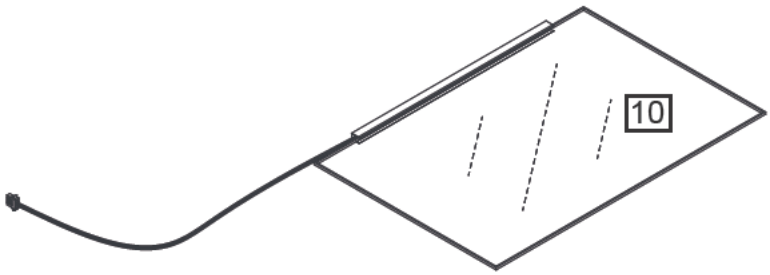

x2

Clamp the LED lights bars (P) to glass shelves (10).

Assembly Instructions

Step 10



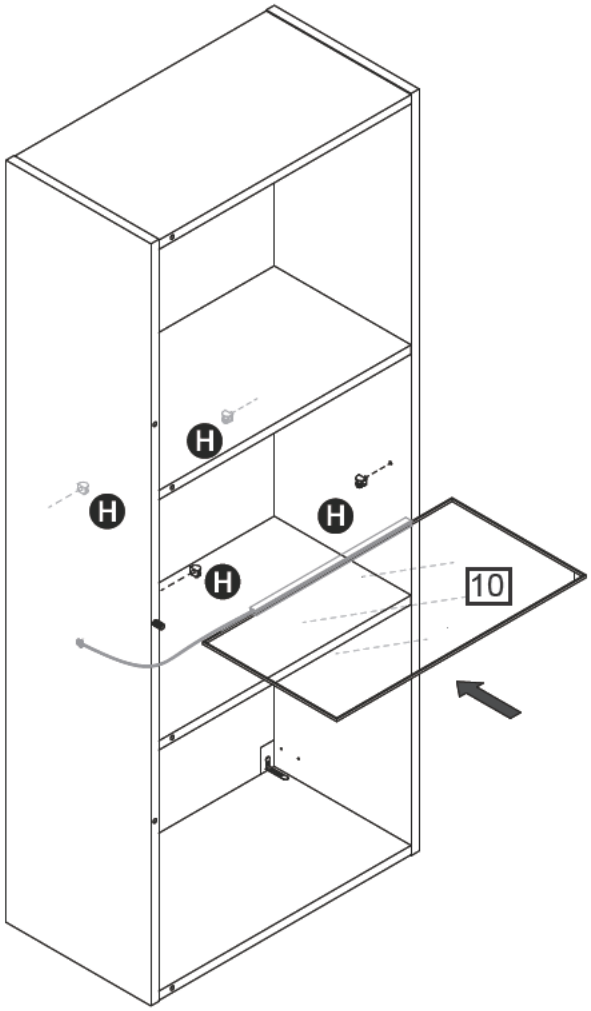

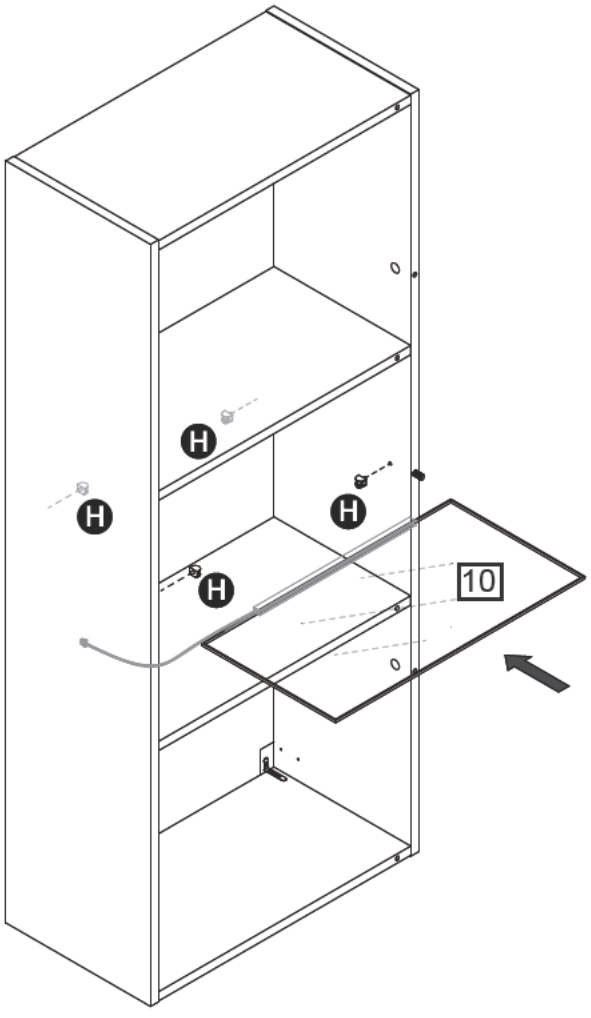

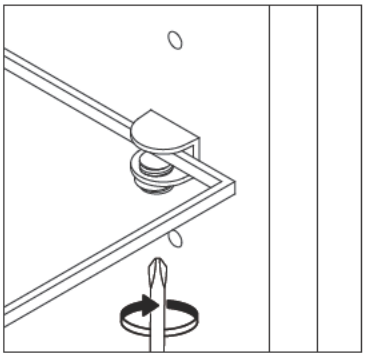

Insert glass shelf clamps (H) into part (1, 2), then slide the glass shelves (10) into the clamps.
Note: You may screw the glass shelf clamps to tightern them.

Assembly Instructions

Step 11



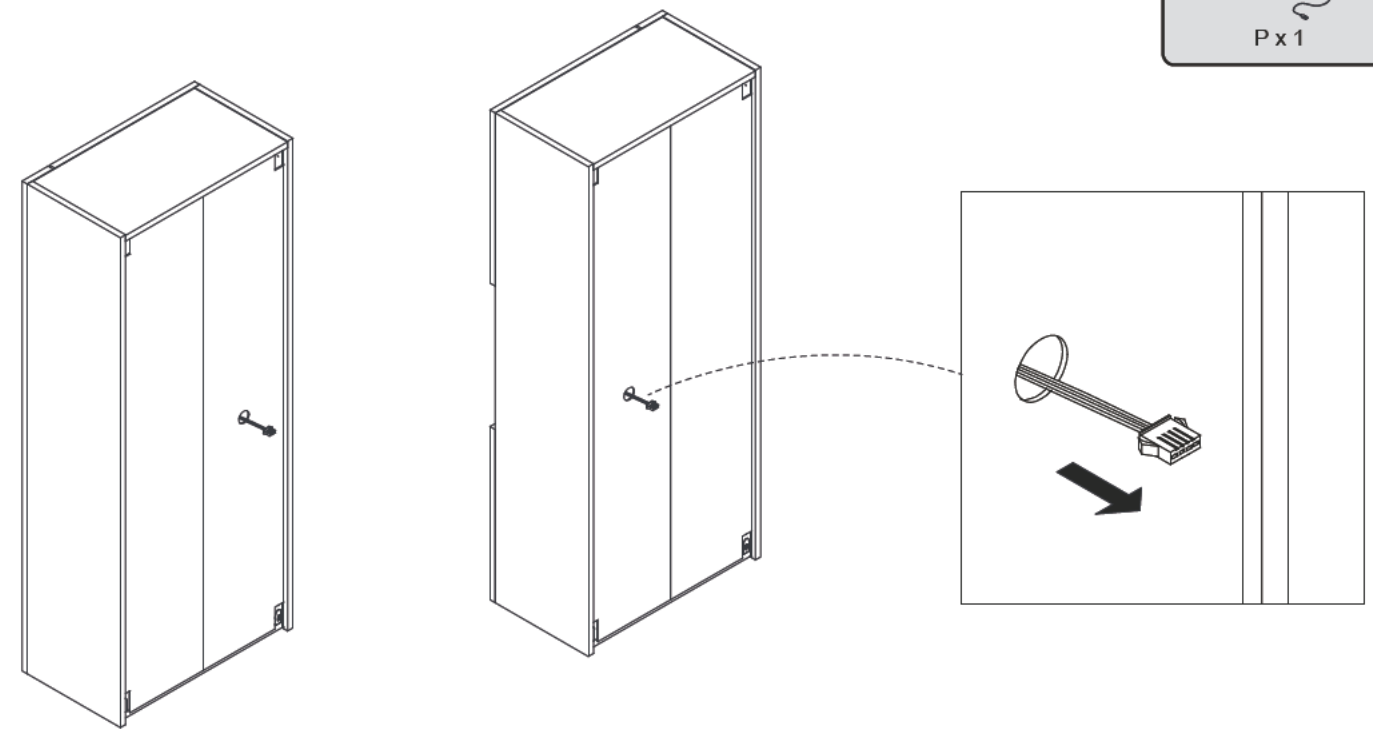

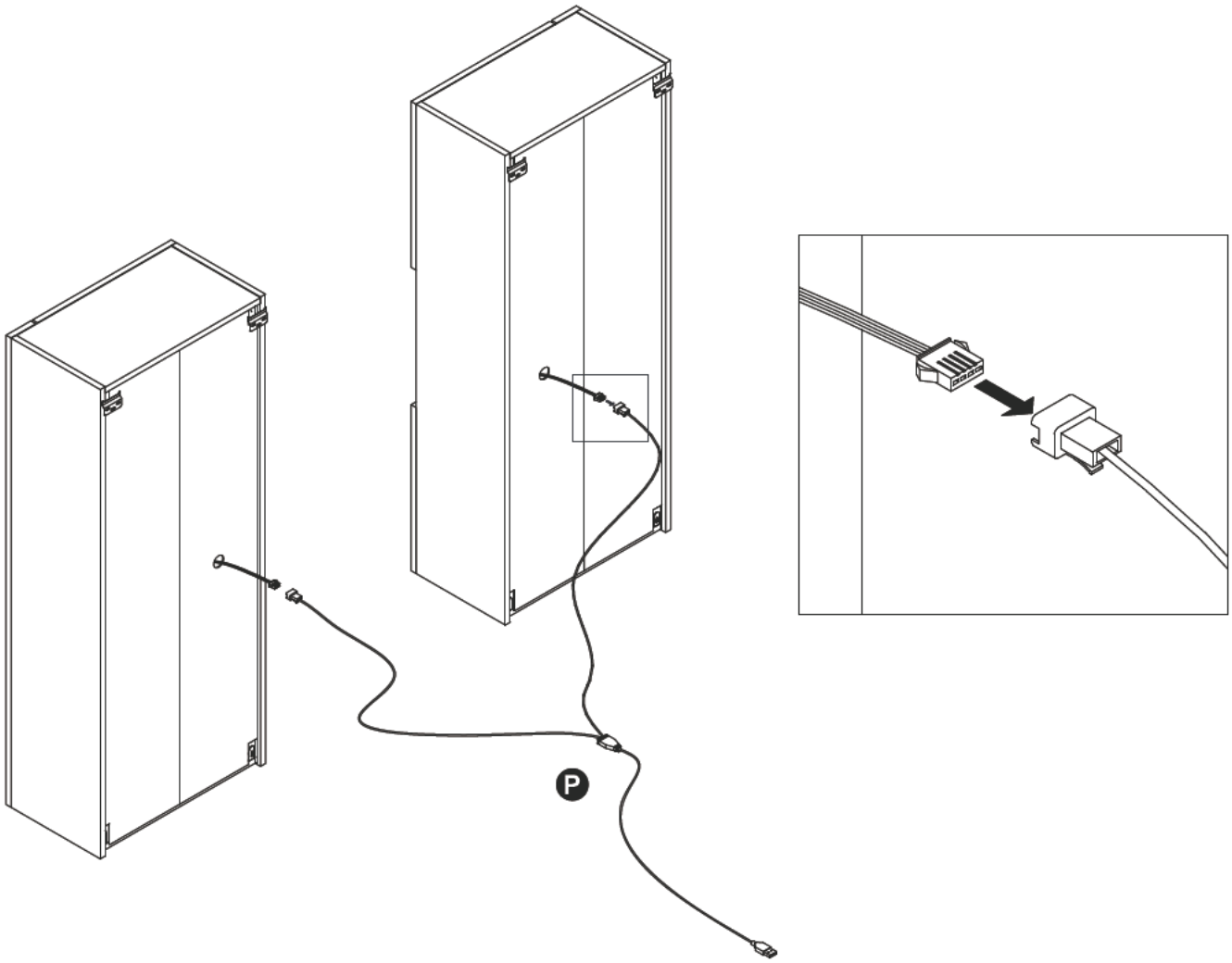

Get the power cables of the LED lights through the cable holes.
Connect the LED lights with the USB power cable.

Assembly Instructions

Step 12

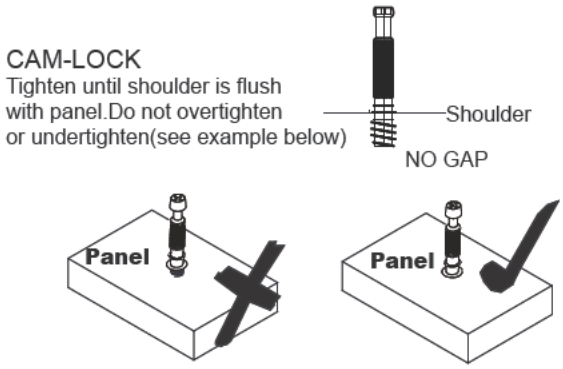

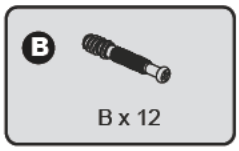

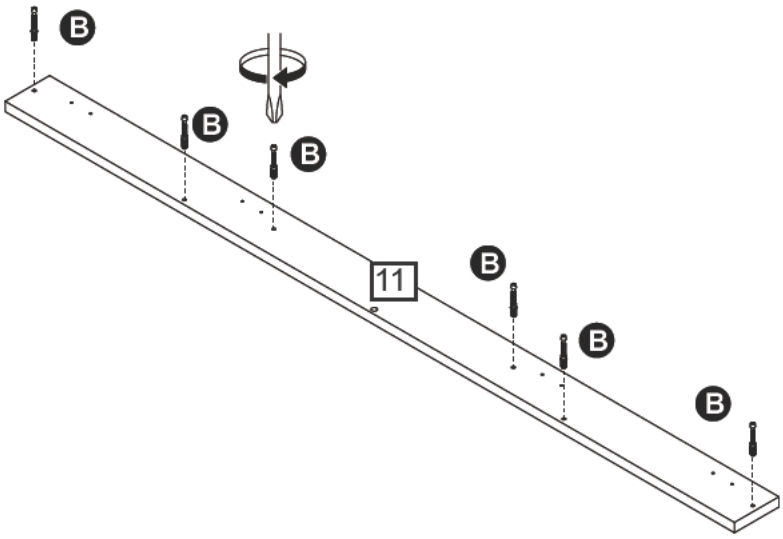

x2

Attach cam bolt (B) to part (11) with a screwdriver.

Step 13

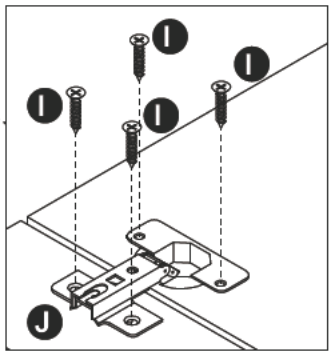

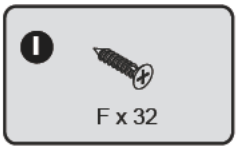

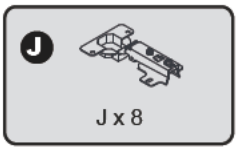

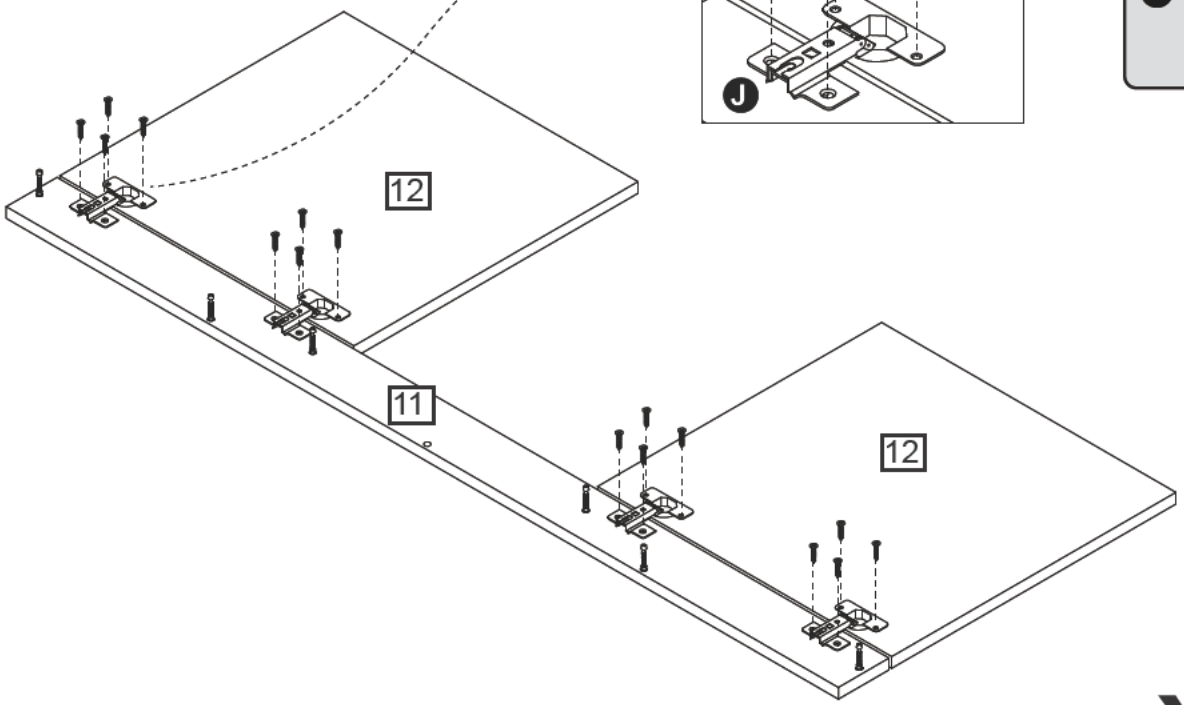

x2

Use screws (I) to secure hinges (J) to doors (12), and then secure hings (J) to part (11) with a screwdriver.

Assembly Instructions

Step 14

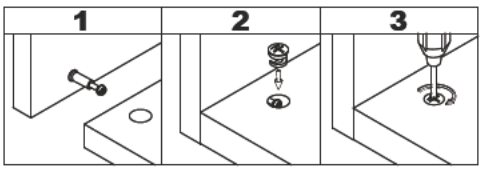



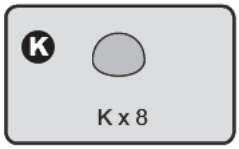

Attach part (11) to part (1, 3, 4, 5), then insert and secure cam lock (C) to part (1, 3, 4, 5) to lock them.
Attach part (11) to part (2, 6, 7, 8), then insert and secure cam lock (C) to part (2, 6, 7, 8) to lock them.
Attach door bumpers (K) to part(1, 2).
You may refer to page 4 about how to adjust hinge.

Assembly Instructions

Step 15

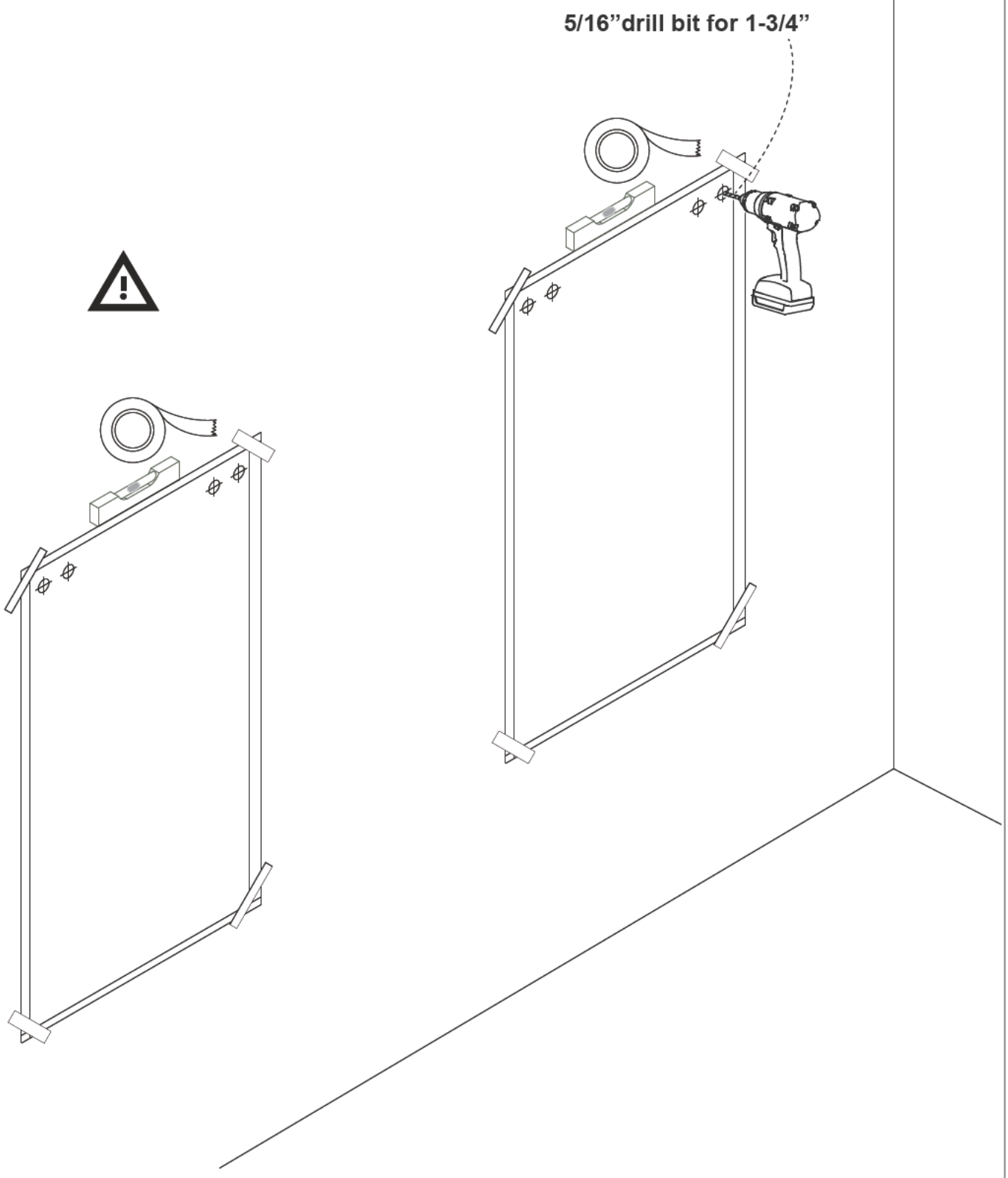

Tape the cardboards to the wall where the storage cabinets will be mounted
Drill the hole on the target mark on the cardboards.
Note1: Use a level to make sure the cardboards are level.
Note2: Always ensure the wall to be drilled is free from hidden electrical wires, water and gas pipes.

Assembly Instructions

Step 16

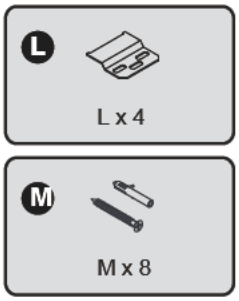

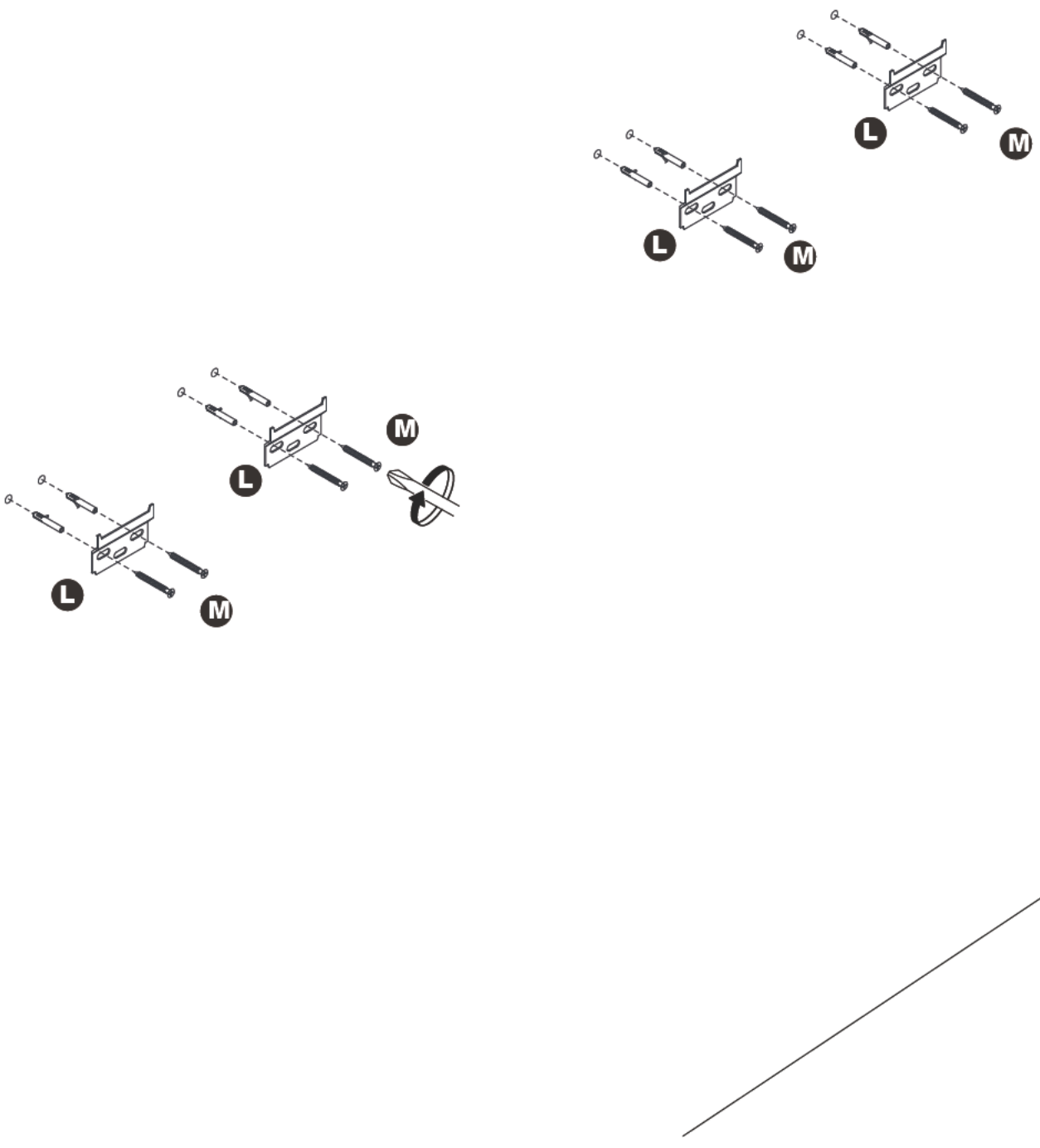

Insert appropriate wall plugs into each hole, then install cleat (L) to the wall using screw (M).

Assembly Instructions

Step 17

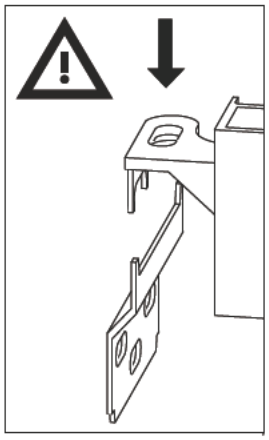

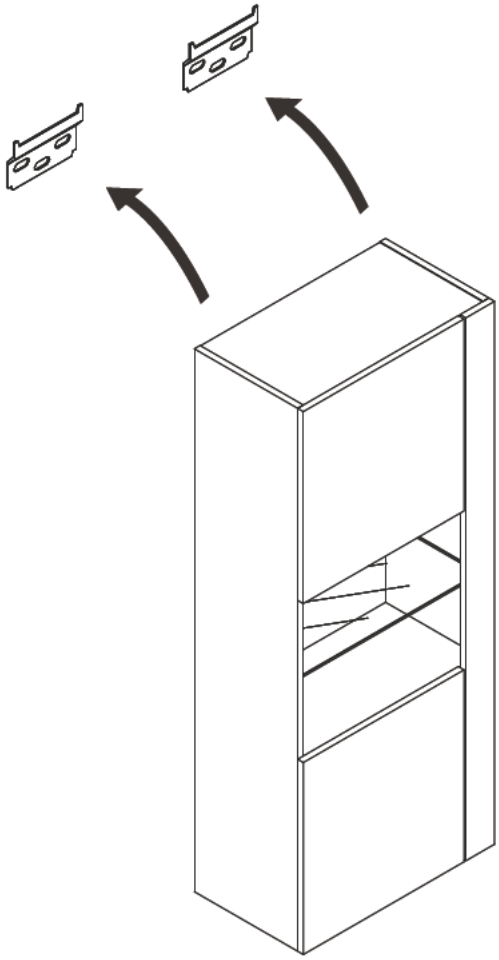

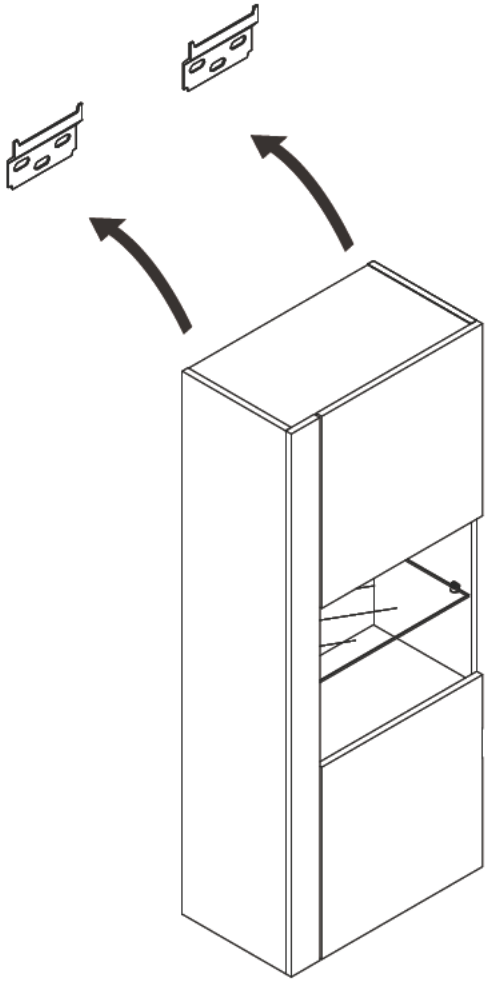

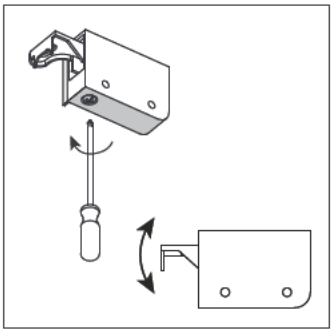

Make sure all 4 brackets and cleats are securely interlocked.

Step 18

Step 18-1

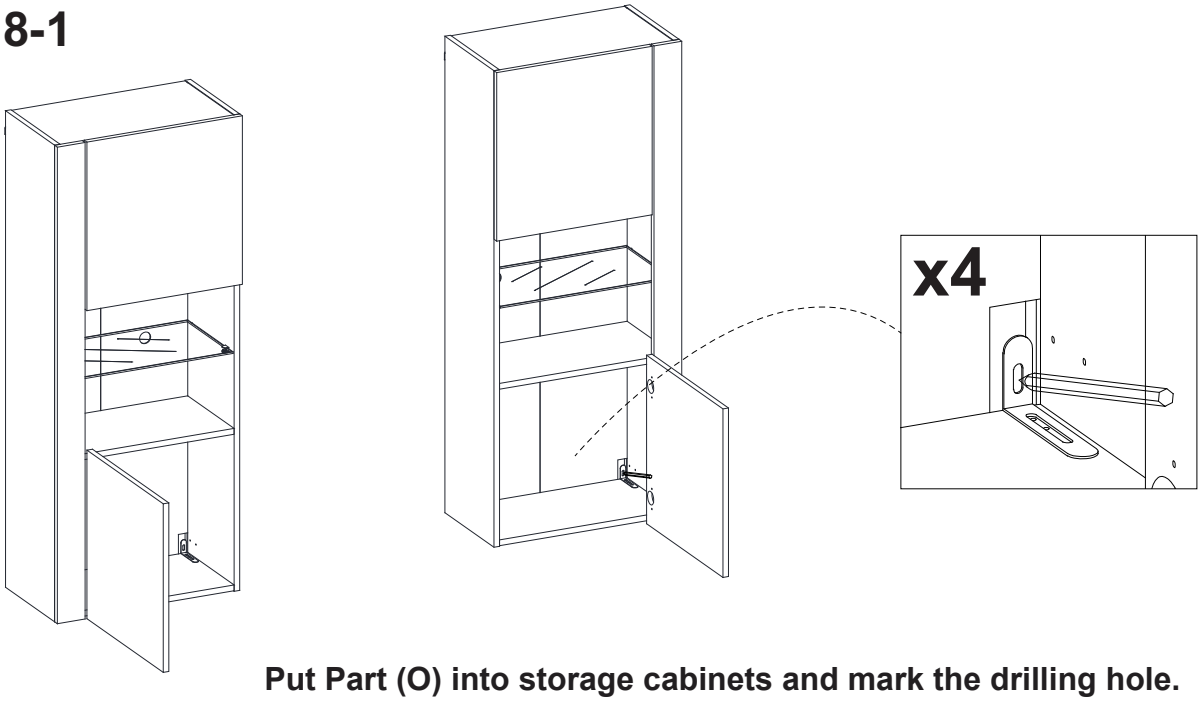

Put Part (O) into storage cabinets and mark the drilling hole.

Step 18-2

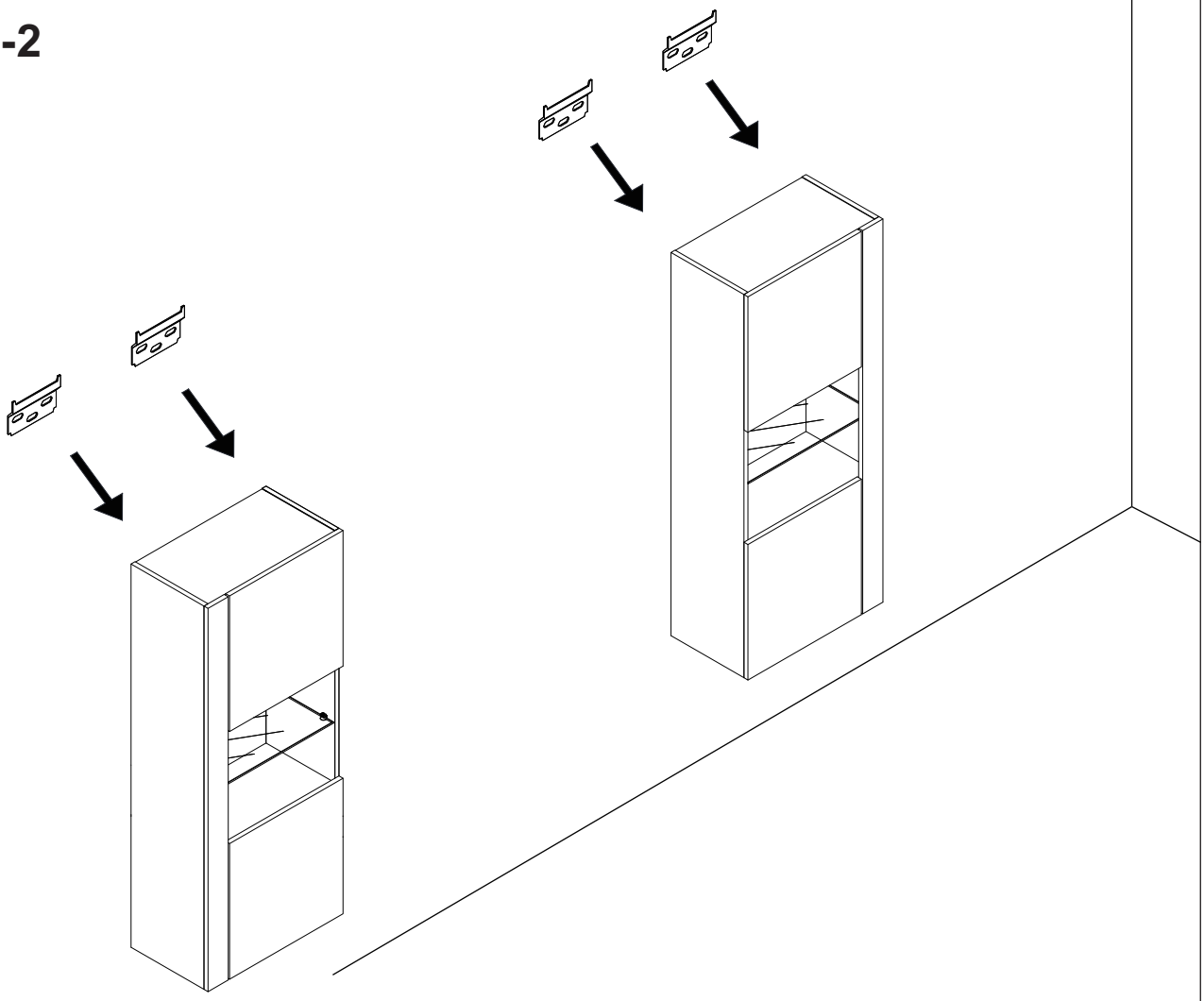

Drop the cabinet down from wall preparing for drilling holes.

Assembly Instructions

Step 19



Step 19-1

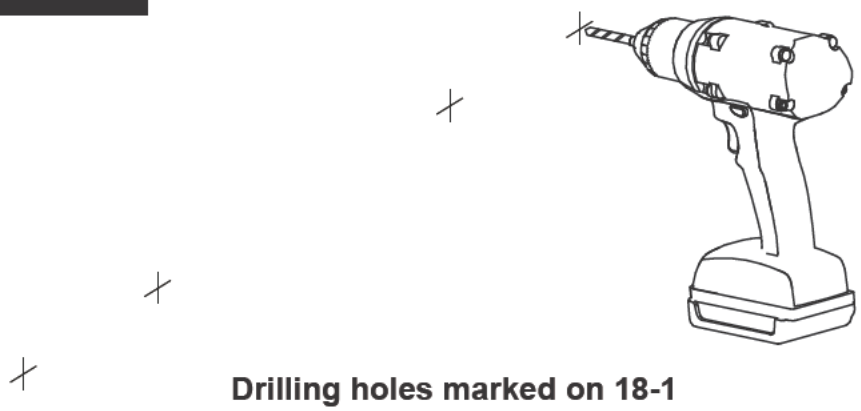

Drilling holes marked on 18-1

Step 19-2

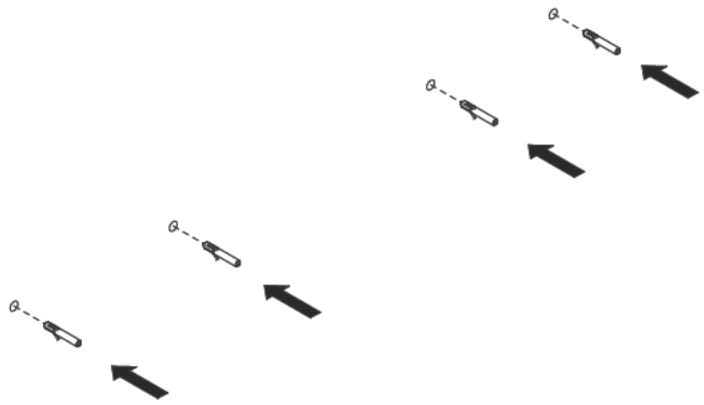

Insert 4 wall plugs.

Step 19-3

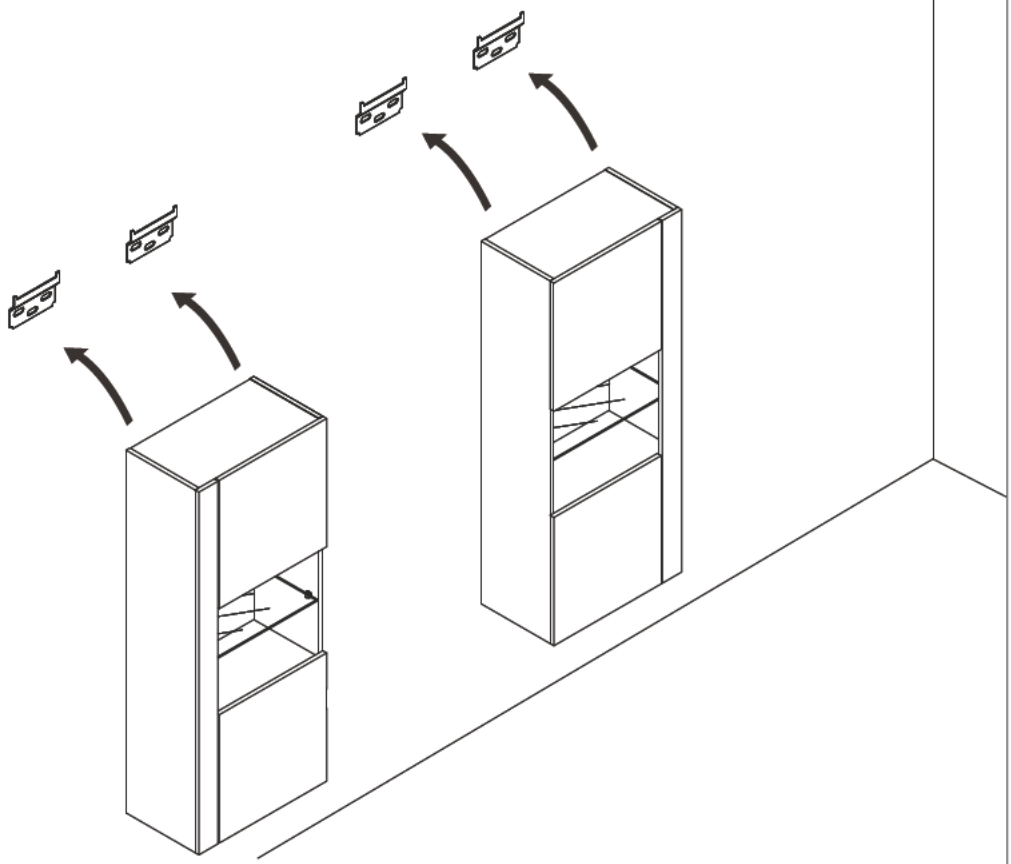

Lift the storage cabinets back on the wall.
Please make sure all 4 brackets and cleats are securely interlocked.

Assembly Instructions

Step 20

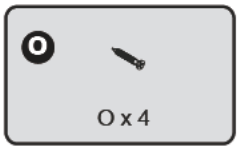

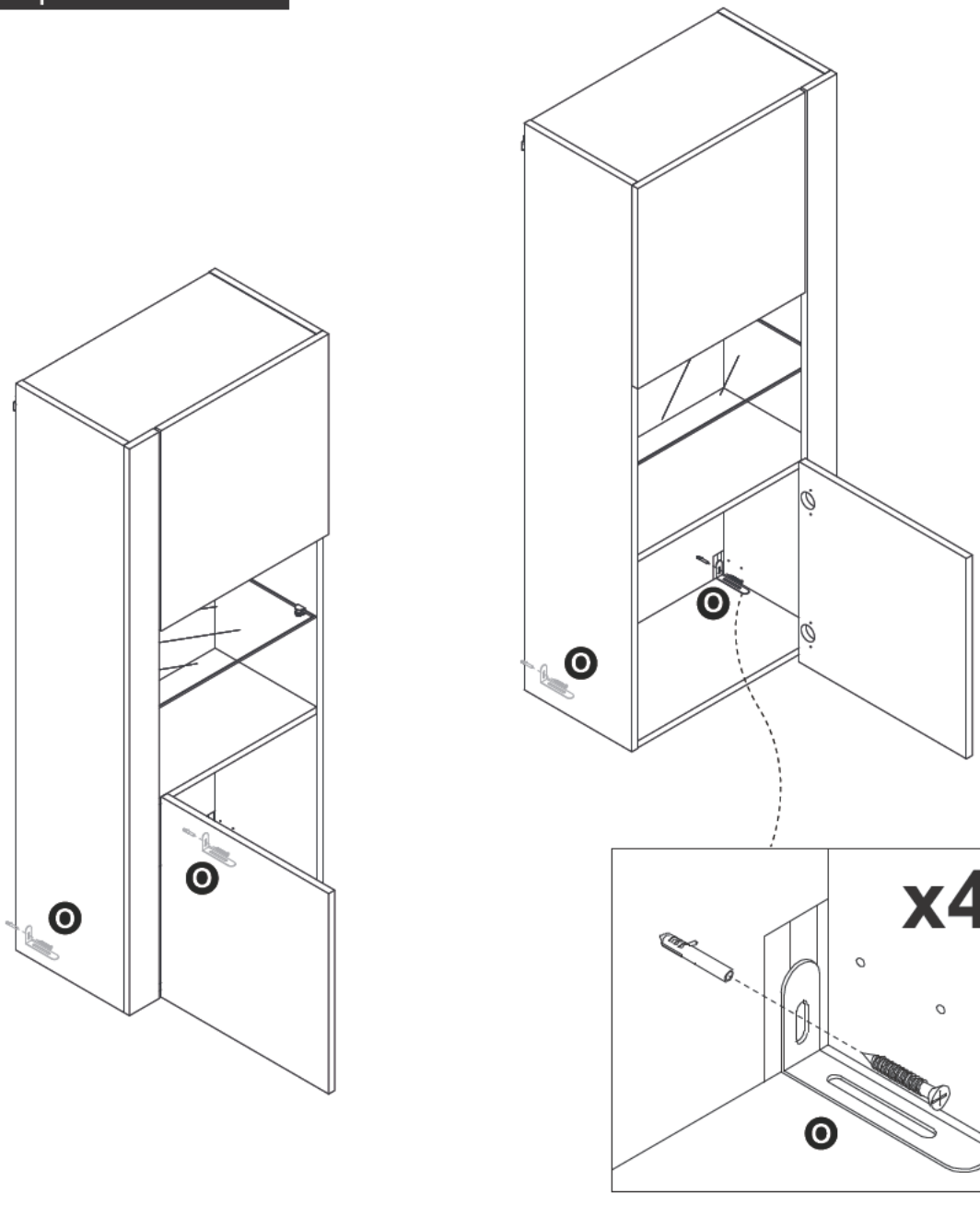

Serious or fatal curshing injuries can occur from furniture falling down. The furniture must be used with the wall attachment device

Secure the wall attach brackets to the wall using screws (O).

A Guide to Wall Mounting & Fixings

Important note:

If plastic wall plugs (rawl plugs) are supplied with your product, e.g.:



- these are only suitable for use in masonry walls.

If you are in any doubt about the correct wall plugs for your wall, seek professional advice.

Failure of the product due to using the incorrect fixings is the responsibility of the installer.

Important: when drilling into walls always check that there are no hidden wires or pipes etc.

Make sure that the screws and wall plugs being used are suitable for **supporting your unit. Consult a qualified tradesperson if you** are unsure.

Hints:

1: General rule: always use a larger screw and wall plug if you are not sure.
2: Ensure you use the recommended drill bit to match the wall plug and hole size.
3: Ensure you drill the hole horizontally; do not force the drill or enlarge the hole.
4: Take extra care when drilling high walls, ceilings and ceramic tiles. Ensure wall plugs are inserted beyond the thickness of the ceramic tiles to avoid the tiles splitting or cracking.
5: Ensure wall plugs are well fitted and are a tight fit in the drilled hole.

Types of walls

You can use one of the following types of wall plug if your walls are made of brick, breeze block, concrete, stone or wood.

No.1 "General Purpose" wall plug

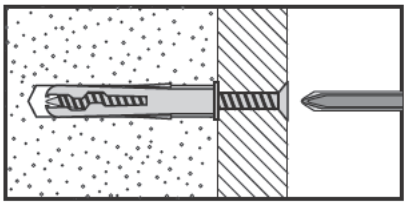

Generally aerated blocks should not be used to support heavy loads, use a specialist fitting in this case. For light loads, general purpose wall plugs can be used.

No.3 "Cavity Fixing" wall plug

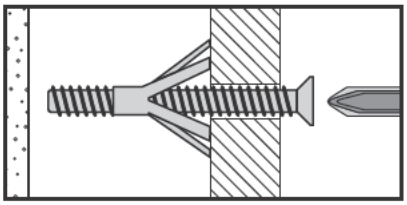

For use with plasterboard partitions or hollow wooden doors.

No.5 "Hammer Fixing" wall plug

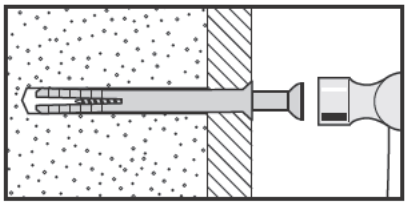

For use with walls stuck with plasterboard. The hammer fixing allows it to be fixed to the wall rather than the plasterboard. Always check the fixing is secure to the retaining wall.

No.2 " Plasterboard" wall plug

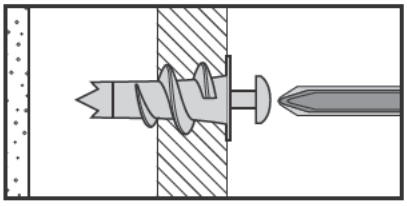

For use when attaching light loads onto plasterboard partitions.

No.4 " Cavity Fixing – Heavy Duty" wall plug

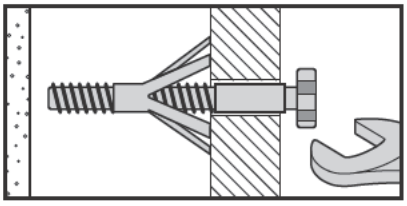

For use when fitting or supporting heavy loads such as shelving, wall cabinets and coat racks.

No.6 " Shield Anchor" wall plug – heavy loads

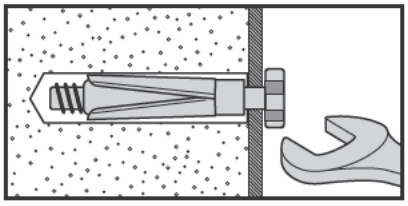

For use with heavier loads such as TV and HiFi speakers and satellite dishes etc.

Care & Maintenance

Safety: always check the fitting and location to ensure your safety in and around the home.

Fitting: from time to time check the fitting to ensure the wall plugs or screws do not become loose.