ASSEMBLY INSTRUCTION

SKU CODE: N736P460345, N736P460346

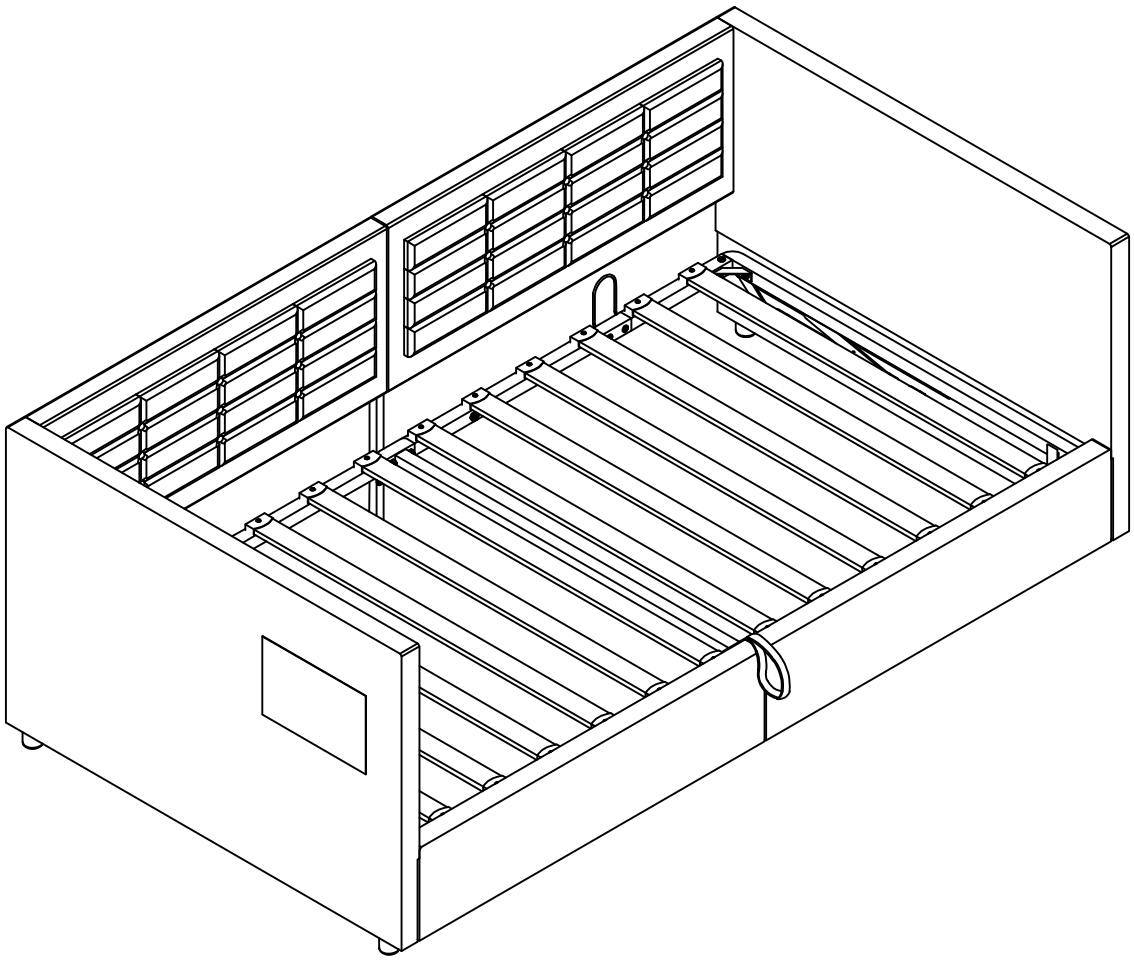

Detail:

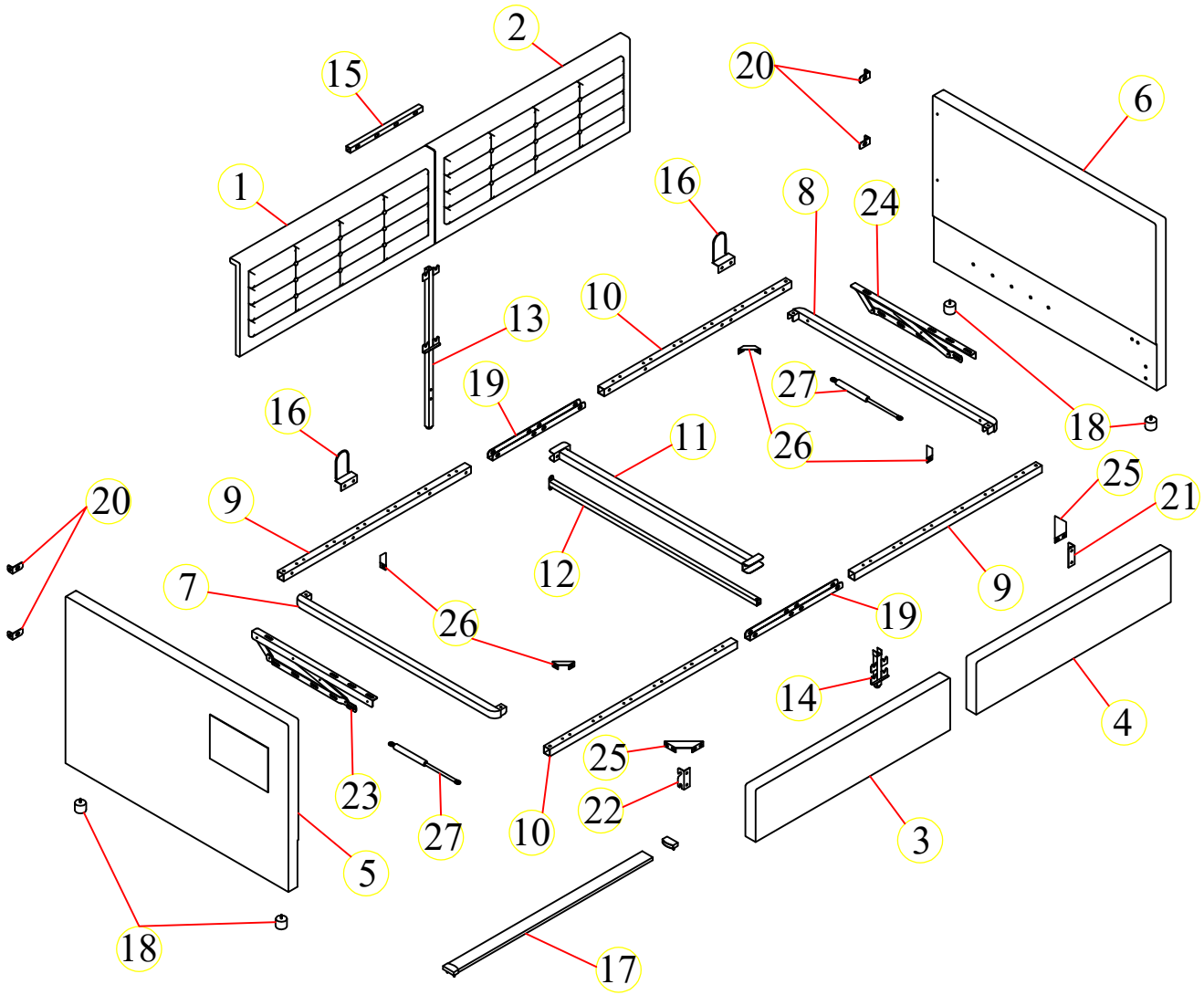

2
15
20
6
1
16
8
24
10
13
19
27
16
11
26
18
25
21
20
9
12
9
7
26
19
14
4
25
23
22
27
10
3
5
18
17

Part List (N736P460346)

1 x1 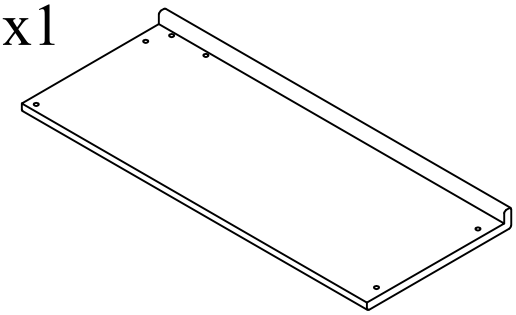 **Back frame(left)**	2 x1 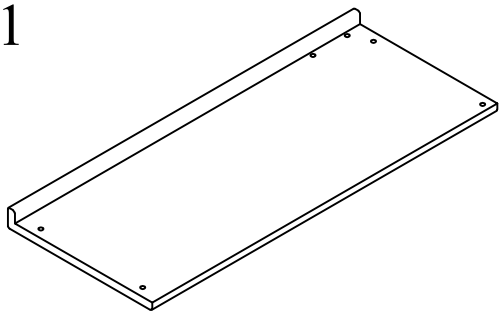 **Back frame(right)**
3 x1 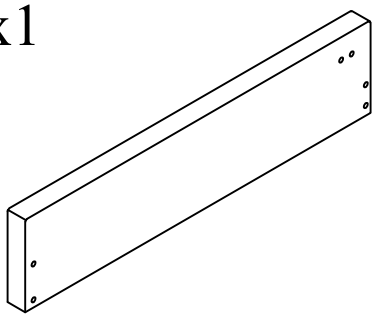 **Front frame(left)**	4 x1 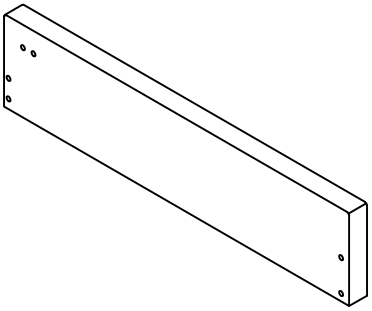 **Front frame(right)**
17 x12 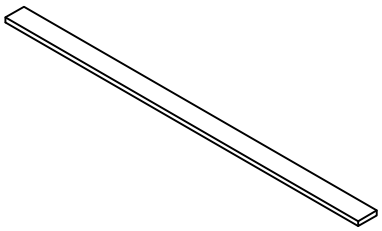 **Slat**	

Part List (N736P460345)

5 x1 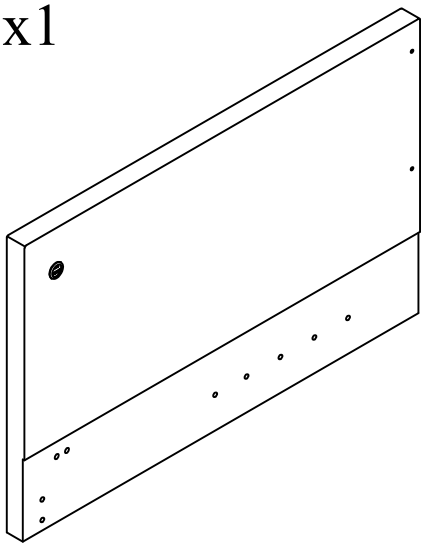 **Side frame(left)**	6 x1 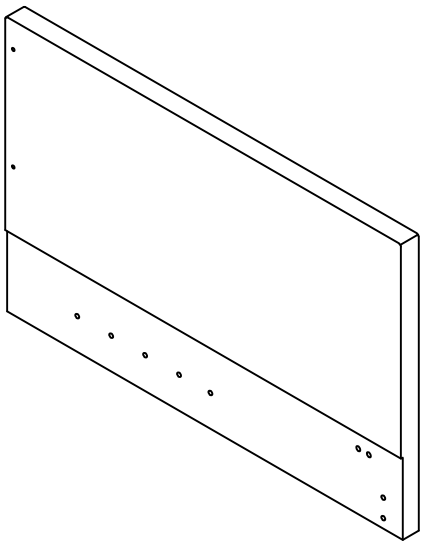 **Side frame(right)**
7 x1 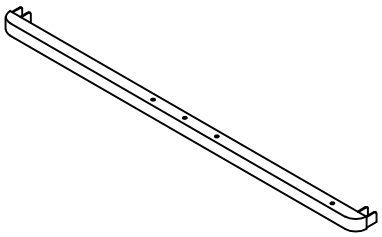 **Side rail(left)**	8 x1 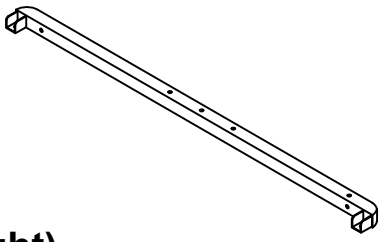 **Side rail(right)**
9 x2 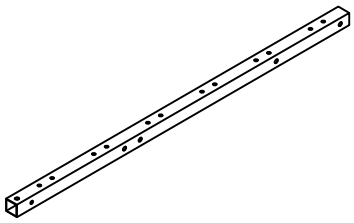 **Top rail(left)**	10 x2 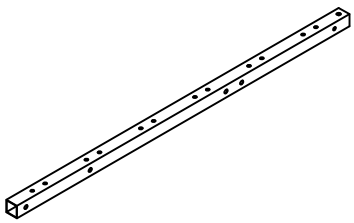 **Top rail(right)**
11 x1 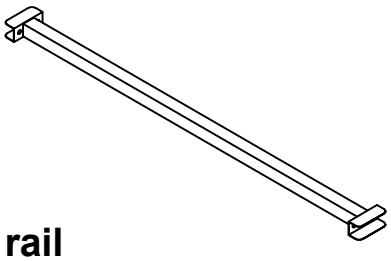 **Top center rail**	12 x1 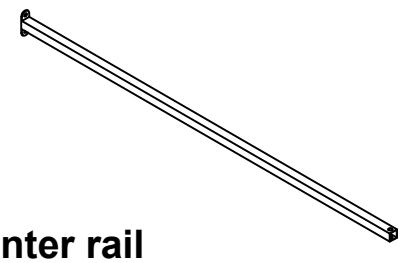 **Bottom center rail**
13 x1 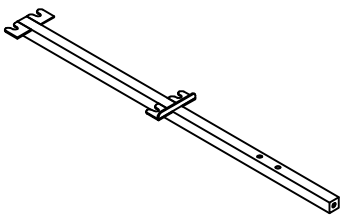 **Back leg**	14 x1 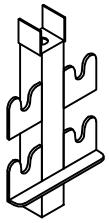 **Front leg**

Part List (N736P460345)

15 x1 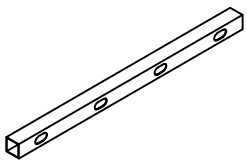 **Back rail**	16 x2 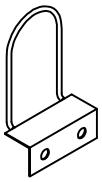 **Mattress block**
18 x4 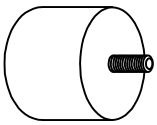 **Leg**	19 x2 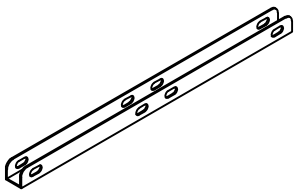 **Inside rail**
20 x4 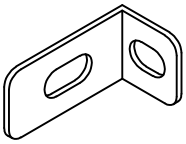 **Bass L**	21 x1 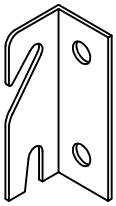 **Hook(left)**
22 x1 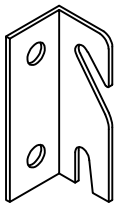 **Hook(right)**	23 x1 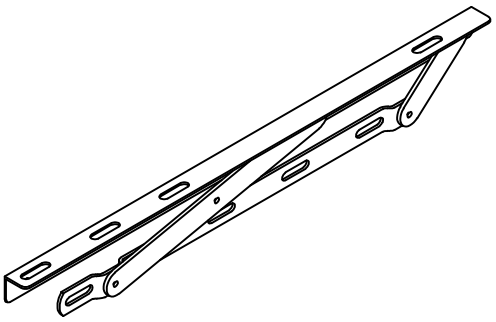 **Lifting frame(left)**
24 x1 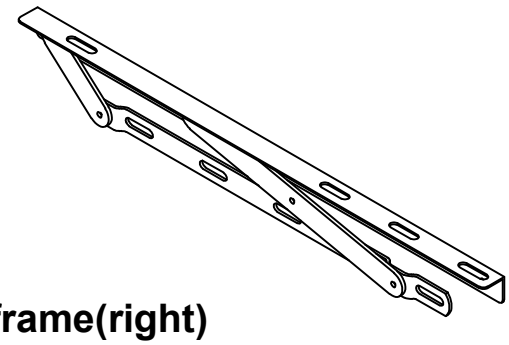 **Lifting frame(right)**	25 x2 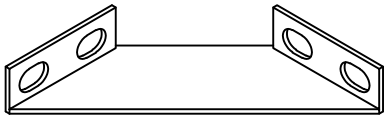 **Corner block**
26 x4 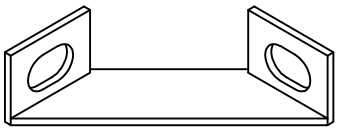 **Corner block**	27 x2 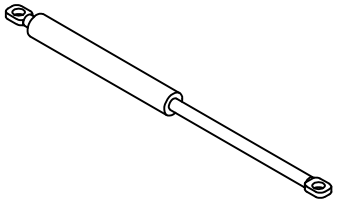 **Gas spring**

Hardware List (N736P**460345**)

A x68 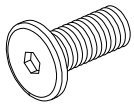 **Bolts** M8*20mm	B x5 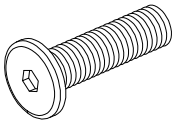 **Bolts** M8*35mm
C x8 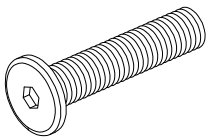 **Bolts** M8*45mm	D x12 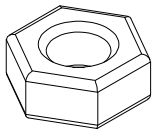 **Heavy Hex Nuts**
E x1 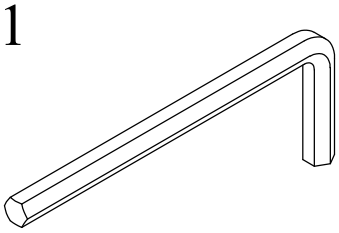 **Allen key 60*22*4mm**	F x24 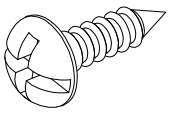 **Round head screw 3.5*15mm**
G x24 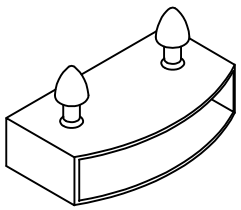 **Corner block**	H x1  **Afraid of ropes**
I x1 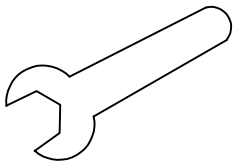 **Single head wrench**	

STEP 1:

18	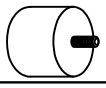	4pcs

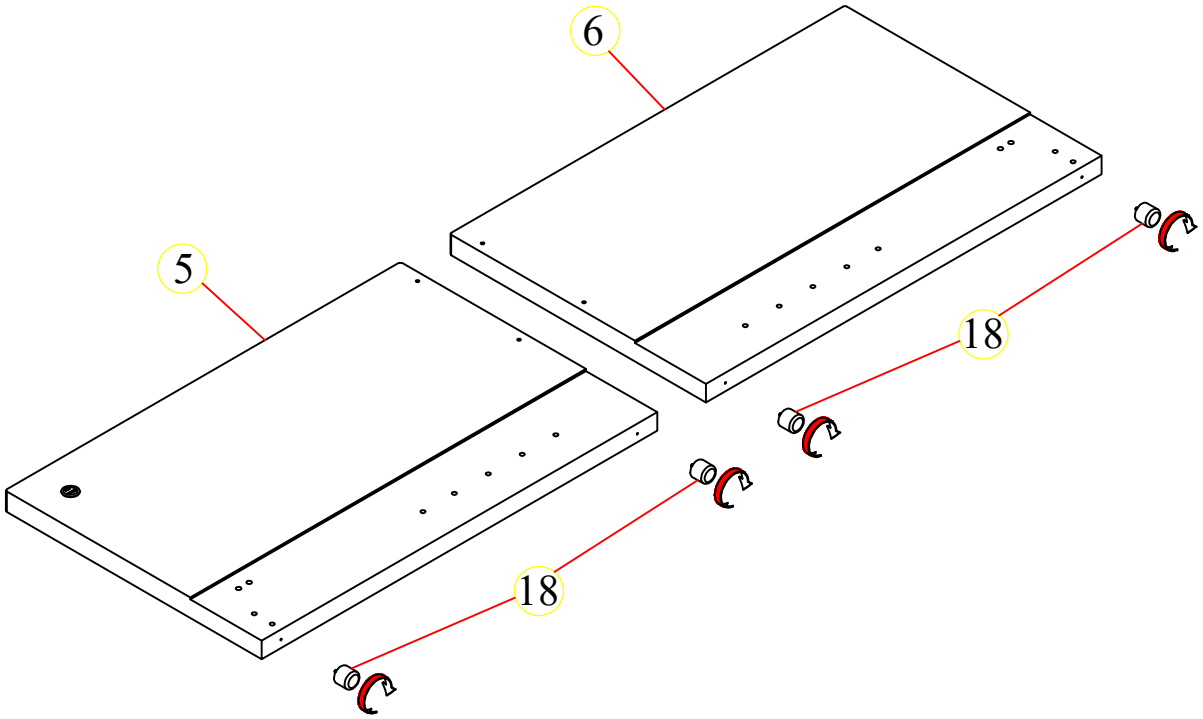

STEP 2:

A		10pcs
E		1pc

STEP 3:

A		4pcs
E		1pc

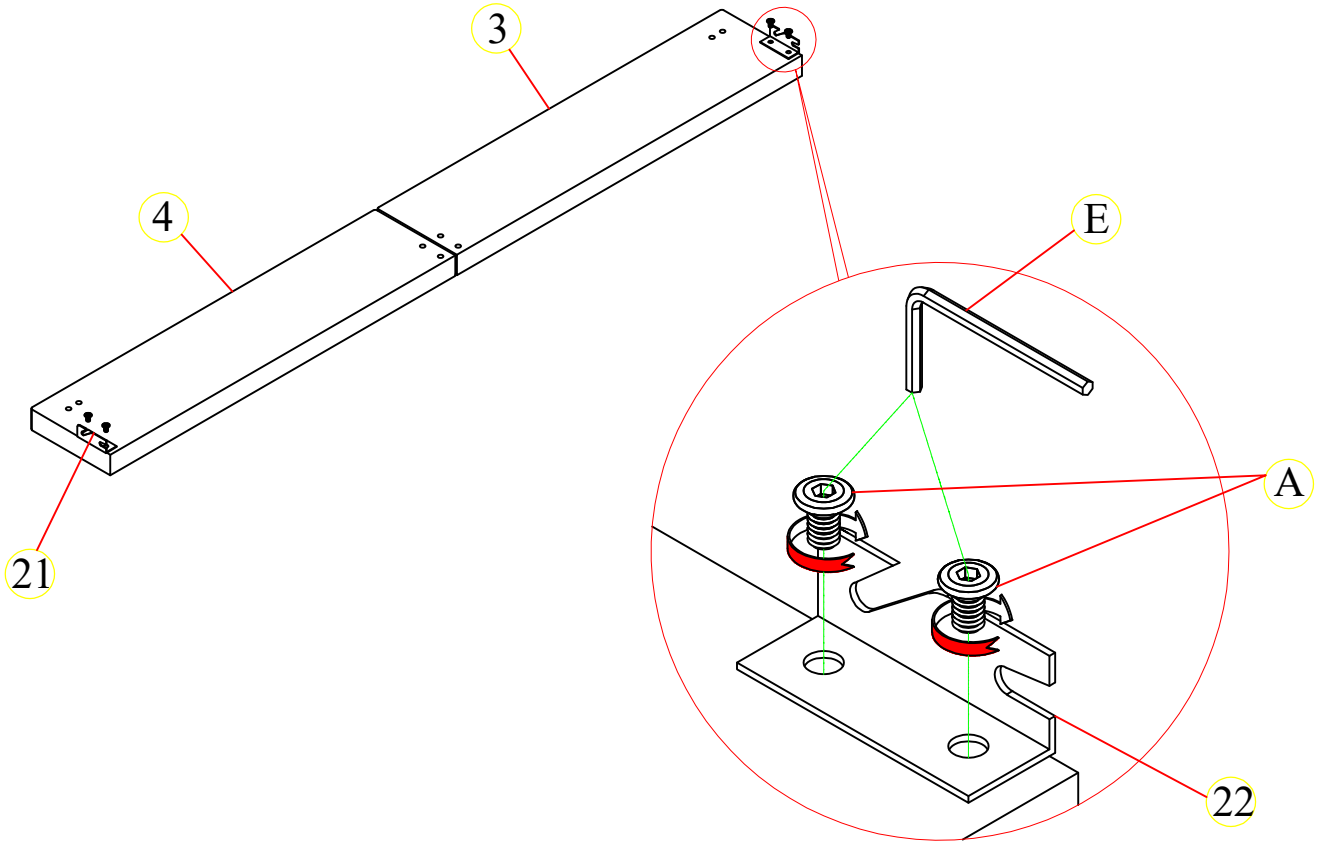

STEP 4:

A		4pcs
E		1pc

STEP 5:

A		4pcs
B	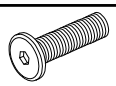	4pcs
E		1pc

STEP 6:

C	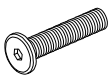	4pcs

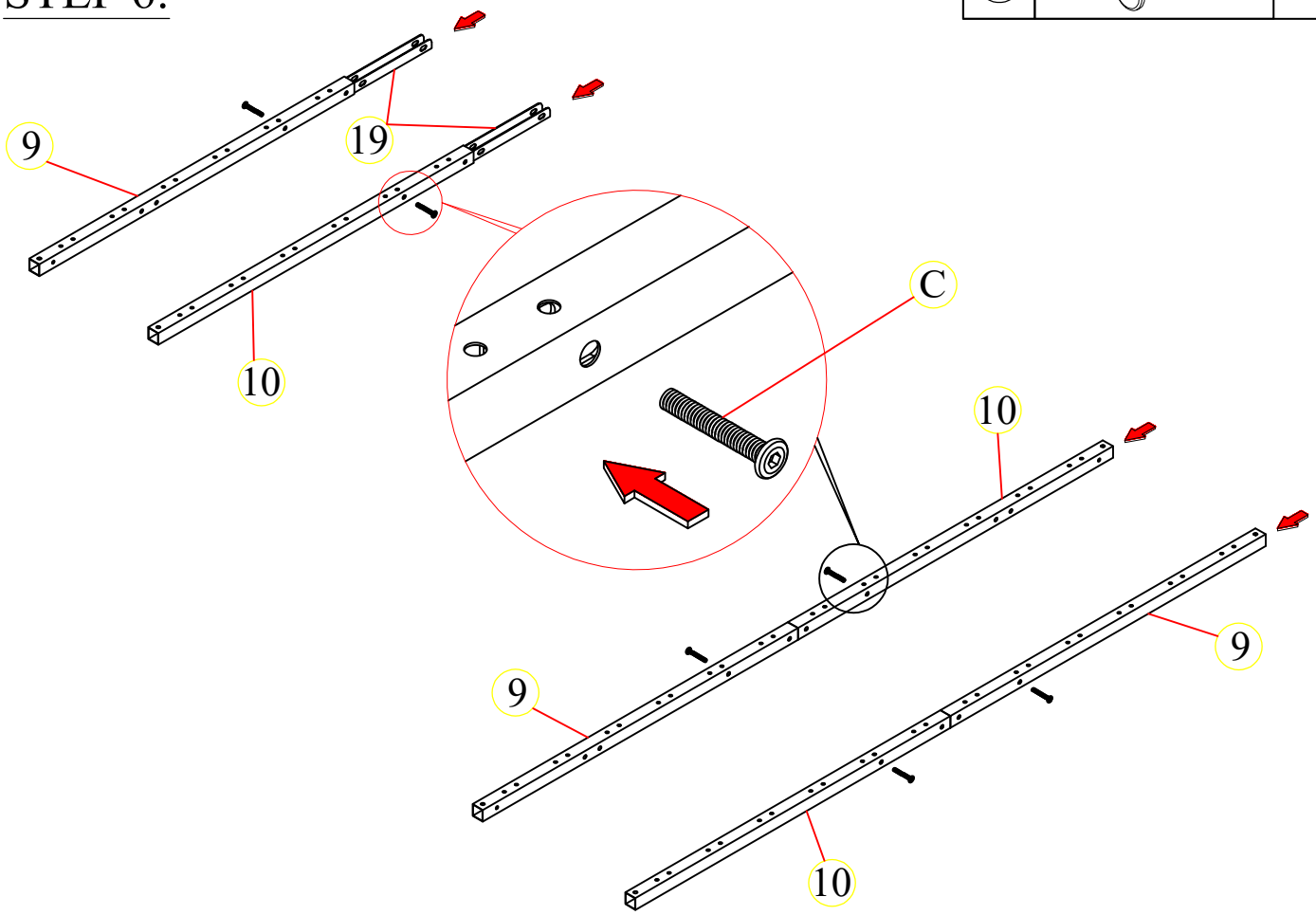

STEP 7:

C	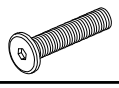	4pcs
D		8pcs
E		1pc

STEP 8:

A		4pcs
E		1pc

STEP 9:

A		8pcs
E		1pc

STEP 10:

A		8pcs
E		1pc

STEP 11:

A		12pcs
E		1pc

STEP 12:

A		2pcs
B	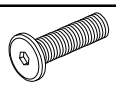	1pc
E		1pc

STEP 13:

A		8pcs
E		1pc

STEP 14:

D		4pcs
I	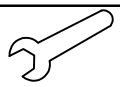	1pcs

STEP 15:

G		24pcs

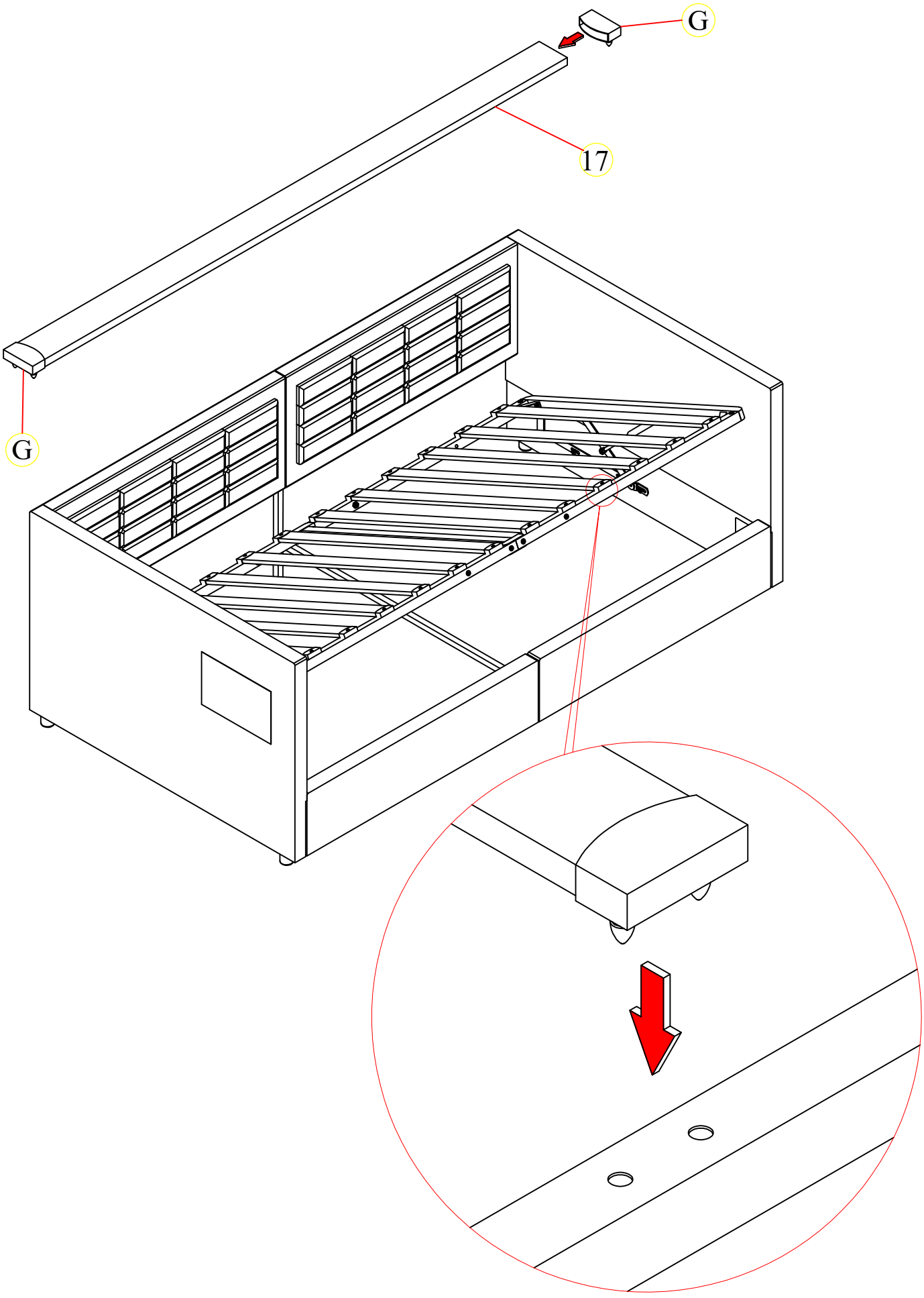

STEP 16:

H	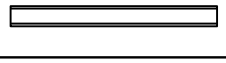	1pc

STEP 17:

A		4pcs
F		24pcs
E		1pc

FINAL:

