Motion Sensor Outdoor Wall Light(s)

(Bulb NOT Included)

MODEL:OW7133-2BK-1W

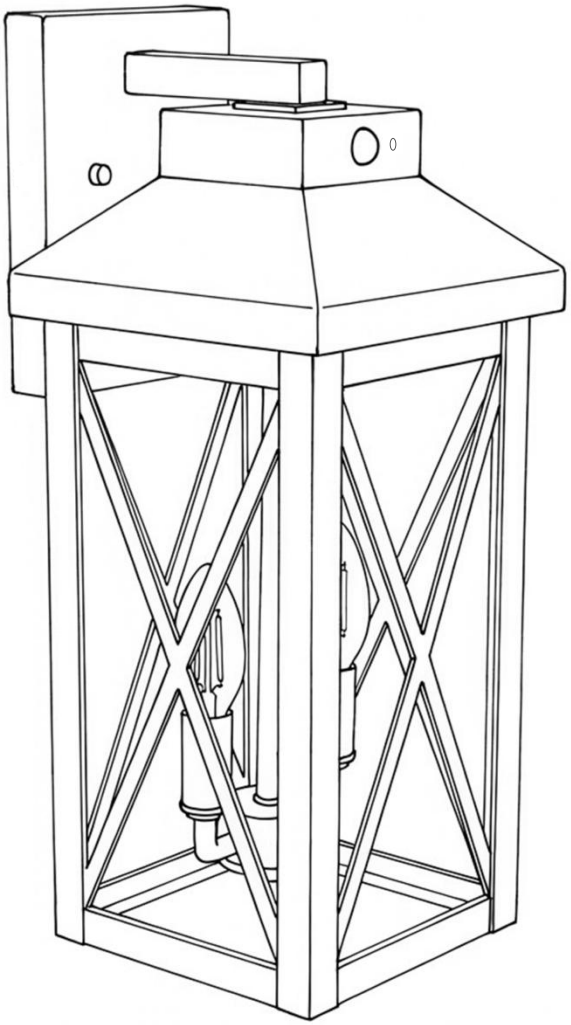

18″ Large Size

Anti-Rust

PIR Motion Sensor

Weather-Resistance

Easy Installation

Getting Started

Dear Customer :
Thank you for choosing our product! We truly appreciate your business.
If you have any questions or encounter any issues, please don't hesitate to contact our support team. You can reach us at **support@4modernhome.com** or by phone at **469-312-6428**. We are dedicated to ensuring you are completely satisfied with your purchase.
Your feedback is invaluable to us, as it helps future customers make informed decisions. We would be grateful if you could share your experience.
Once again, thank you for choosing us!
Best regards,
[Support Team]

Important Notices

WARNING: If special control devices are used with this fixture, follow the instructions carefully to ensure full compliance with N.E.C. requirements. For any questions, contact a qualified electrical contractor.

WARNING: California Residents - Proposition 65
This product contains lead, a chemical known to the State of California to cause cancer, birth defects, or other reproductive harm. Do not place this product in your mouth. Wash your hands after handling.

CAUTION: Professional electrical installation is highly recommended. Always turn off the power at the main circuit breaker before beginning installation. All glass components are fragile. Use caution when handling glass parts and lamps.

Product information

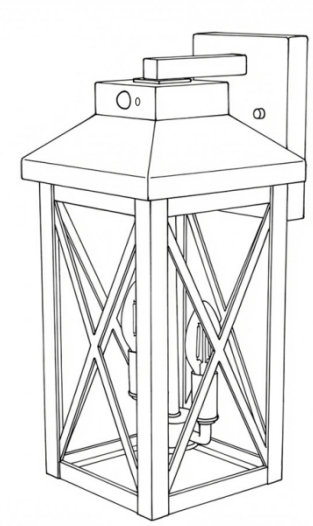

Voltage:	120V
Base Type:	E12*2
Fixture Color:	Black
Material Type:	Metal & Tempered Glass
Finish Types:	Cathodic Electrophoretic Coating, CED
Control Type:	Toggle & Motion Sensor
Power Source:	Corded Electric
Dimensions:	W7.5"xE8.5"xH18.1"

Package Includes:

Code	Part Description	Qty
A	Junction Box	0
B	Mounting Bracket	1
C	Mounting Screws	2
D	Wire Caps	3
E	Nuts	2
F	Lamp Body	1
G	Light Bulb	0
H	PIR Motion Sensor	1

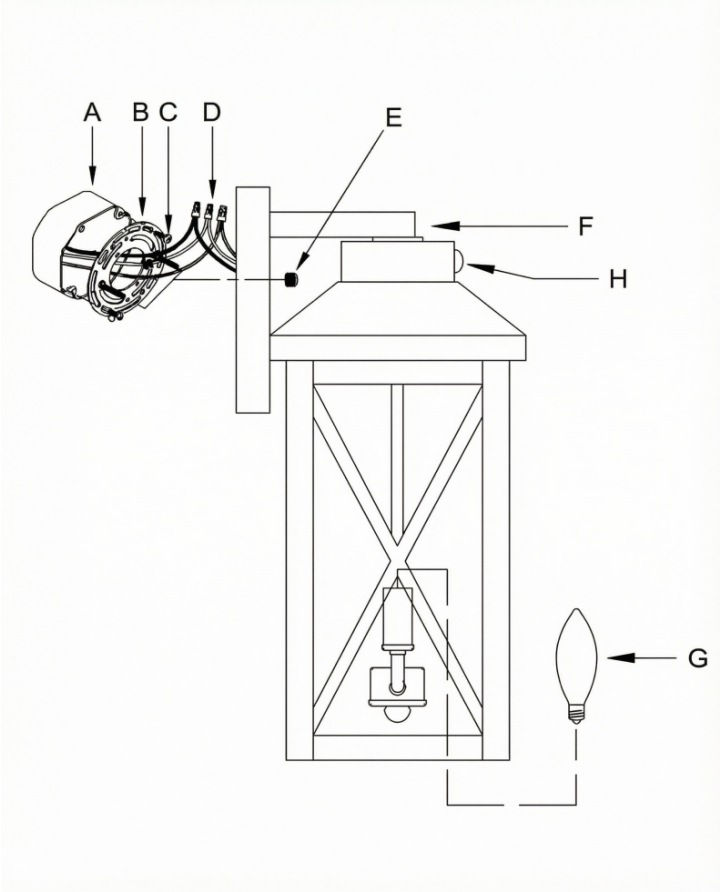

Installation Guide

1. Tools Required

Phillips screwdriver, wire stripper (if necessary), caulking gun (for waterproof sealing), clean soft cloth (for sensor maintenance)

2. Select a Suitable Mounting Location

(1) Please ensure that all small accessories are kept away from children.

(2) To reduce possible nuisances, do not mount the fixture near a heat source like an air conditioner, vent or furnace exhaust, or in a direction facing any reflecting object or other light source.

(3) For best performance, install the light fixture at least 6 feet above the ground. At such a height, the lantern will provide a detection distance of up to 25 feet at 77 degrees Fahrenheit.(See Fig.1)

(4) The sensor detects across a detection range of 120 degrees.(See Fig.2)

(5) The sensor will be more sensitive to motion across its detection path than motion directly towards it.(See Fig.3)

Fig.1

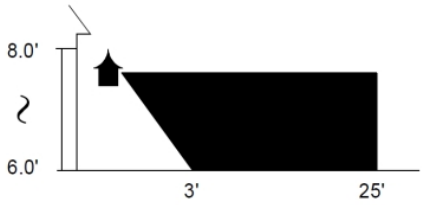

Fig.2

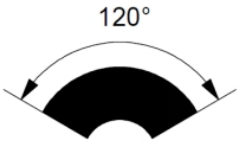

Fig. 3

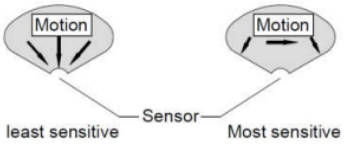

3. Power Safety Precaution: Turn off the power at fuse or circuit box.

WARNING: **To avoid electric shock hazard, DO NOT connect electricity until light fixture is fully assembled and securely mounted.** Please contact a licensed electrician to help you if you don't know how to install it—professional installation is recommended to comply with local electrical codes.

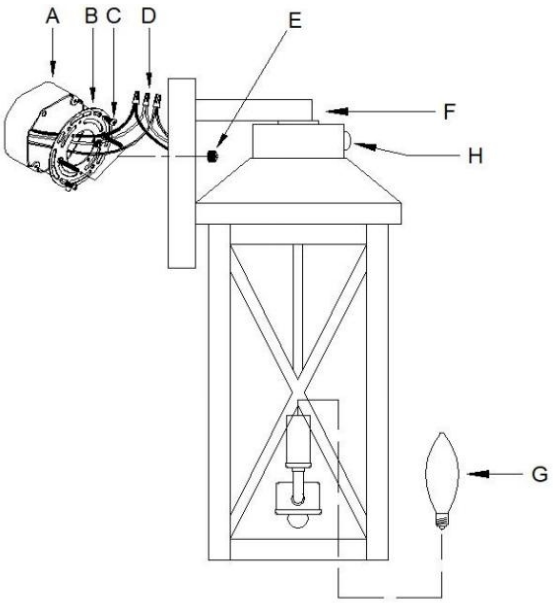

4. Step-by-Step Lamp Body Installation

Step 1: Unscrew Nut E from the lamp body and remove Hanging Plate B.

Step 2: Secure Hanging Plate B to Junction Box A using Screw C.

Step 3: Connect the black wire, white wire, and ground wire of the lamp body to the corresponding wires on Terminal D respectively. Please refer to the diagram below.

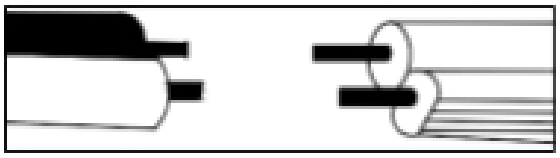

WIRE CONNECTION DIAGRAM: Risk of fire, only use wires that meet local safety standards for electrical circuit connections.

Step 4: Fasten the lamp body to the mounting bracket with Nut E.

5. Install the Light Bulb (NOT included)

It is strongly recommended to use 120V AC E12 incandescent bulbs or dimmable LED bulbs (max 15W LED). Non-dimmable LED bulbs may cause flickering due to incompatible brightness regulation with the wall lamp.

6. Waterproof Sealing

To ensure a longer service life, the perimeter of the wall plate where it meets the mounting surface must be sealed with a latex waterproof caulk (not included) to prevent water from infiltrating the outlet box. Please refer to the diagram below.

Installation Tip: Use a caulking gun to apply a continuous, even bead of caulk along the entire perimeter of the wall plate for a weathertight seal.

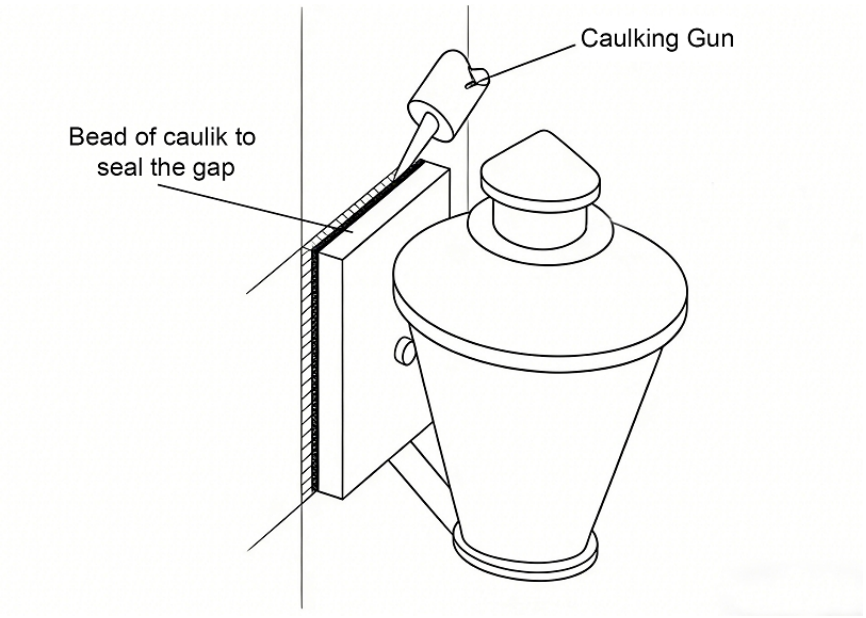

7. Restore Power Supply
   Turn on the power at fuse or circuit box.
8. Sensor Maintenance & Performance Tip
   The sensitivity of the motion sensor will increase as the environmental temperature gets cooler. For best performance, gently clean the lens with a soft cloth every 1 or 2 months to assure maximum sensitivity.
   Note: Keep the sensor lens free of dust, dirt, and debris. Avoid blocking the detection path with plants, decorations, or other objects.

Mode Switching Instructions

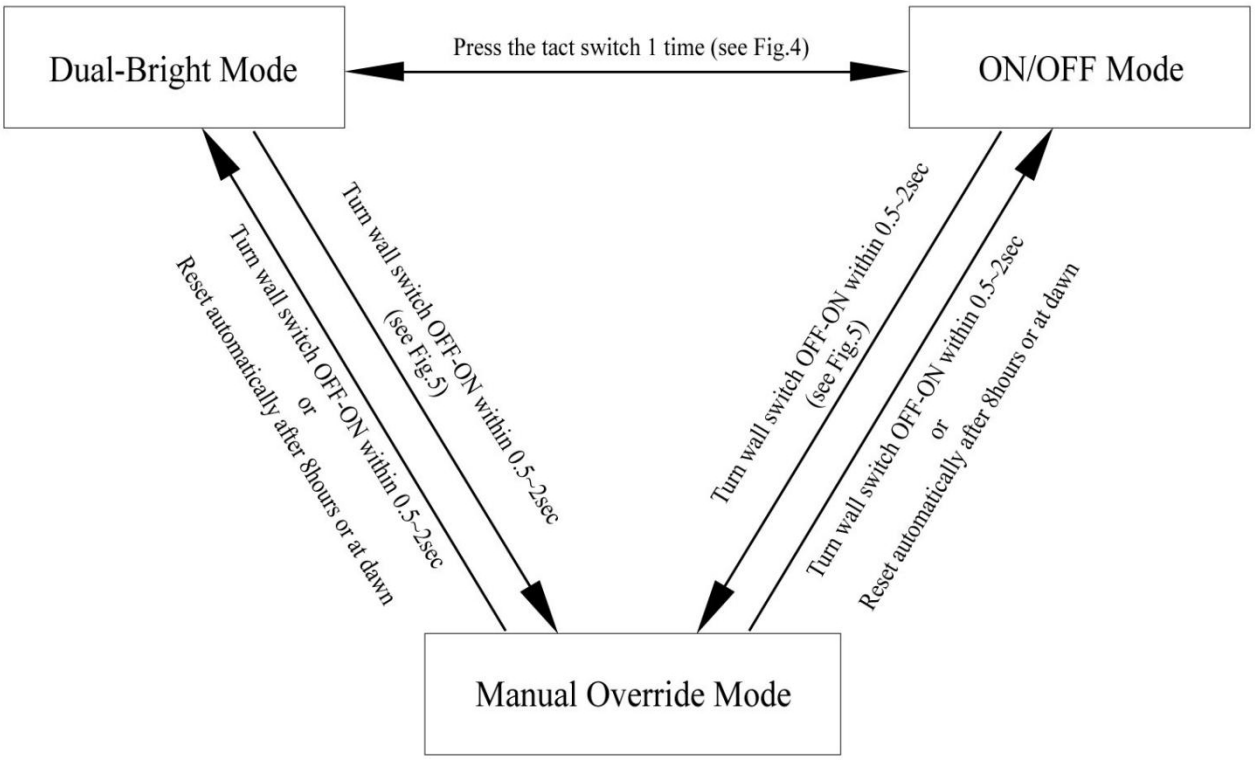

Fig.4

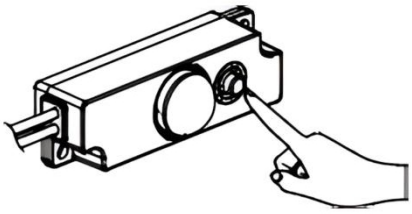

Fig.5

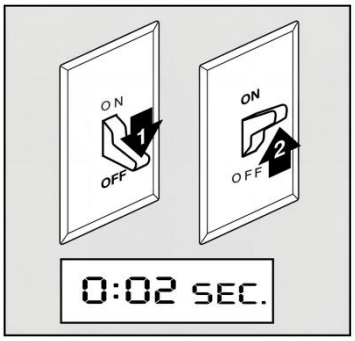

Note：

When switching between Dual-Bright Mode and ON/OFF Mode, the unit will first enter Test Mode (duration: 120 seconds). The product will officially switch to the selected mode only after the Test Mode expires. Test Mode does not interfere with normal operation.

Example A: Switching from *Dual-Bright Mode* to *ON/OFF Mode*

Press the tact switch once. The light will enter ON/OFF **Test** Mode. After 120 seconds, the Test Mode will end, and the unit will officially switch to ON/OFF Mode.

Example B: Switching from *ON/OFF Mode* to *Dual-Bright Mode*

Press the tact switch once. The light will enter Dual-Bright **Test** Mode. After 120 seconds, the Test Mode will end, and the unit will officially switch to Dual-Bright Mode.

Mode Function Instructions

When the light fixture is powered on for the first time (or turn the wall switch OFF, wait for more than 10 seconds and switch ON), the unit will enter Warm-Up and Test Mode.
The Test Mode also includes Dual-Bright Mode and ON/OFF Mode.

Mode	Activation Condition	ON Time	Shut Off Delay Time	Explanation
Warm up	First Power-On	15 Sec	/	Turn on the power at the main fuse or circuit breaker box; the light will turn on immediately. Wait approx. 15 seconds for the sensor to warm up, then the light will automatically enter Dual-Bright Test Mode or ON/OFF Test Mode.
Test Mode - Dual-Bright	First Power-On or Mode Switching	While motion is detected	Approx. 5 Sec	The light operates at low-level brightness in this mode. When motion is detected, the light switches to high-level brightness (100%) and remains on for the duration of motion. It reverts to low-level brightness approx. 5 seconds after motion is no longer detected.
Test Mode - ON/OFF	First Power-On or Mode Switching	While motion is detected	Approx. 5 Sec	When motion is detected, the light turns on at high-level brightness (100%) and remains on for the duration of motion. It shuts off approx. 5 seconds after motion is no longer detected.

The Test Mode lasts approximately 120 seconds, after which the light will automatically enter Dual-Bright Mode or ON/OFF Mode.

Mode	Activation Condition	ON Time	Shut Off Delay Time	Explanation
Dual-Bright Mode	Night Only	While motion is detected	120 Sec	At dusk, the light turns on at low-level brightness (default: 40%; adjustable 15~50%, See Fig.6). When motion is detected, it switches to high-level brightness (100%) and remains on for the duration of motion. It reverts to low-level brightness approx. 120 seconds after motion ceases, then shuts off approx. 30 seconds at dawn.
ON/OFF Mode	Night Only	While motion is detected	120 Sec	At dusk, the light turns on at high-level brightness (100%) when motion is detected and remains on for the duration of motion. It shuts off approx. 120 seconds after motion is no longer detected.
Manual Override Mode	Night Only	While motion is detected	120 Sec	In Dual-Bright Mode or ON/OFF Mode, activate Manual Override Mode by toggling the wall switch OFF then ON within 2 seconds. The light turns on and remains on for approx. 8 hours or until the dusk-to-dawn sensor detects morning light. The mode automatically reverts to Dual-Bright or ON/OFF Mode once the sensor detects light for more than 30 seconds (See Fig.5).

Note：

Fig.6

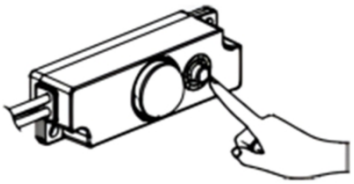

1. Low-Level Brightness Dimming Operation

Press and hold the tact switch for more than 2 seconds (**except in Warm-Up Mode**), and the PIR motion sensor will activate the low-level

brightness dimming function. Release the tact switch immediately once the desired brightness is set; the sensor will save this brightness setting and operate in Dual-Bright Test Mode.

Low-level brightness dimming resolves the following issues:

a. *Reduce the low-level brightness to increase the contrast with full brightness.*

b. *Eliminate light source flickering at low-level brightness for select bulbs via dimming.*

2. To make sure the above functions operate properly, always keep the wall switch in the "ON" position (including the daytime).

3. Turn the wall switch "OFF", wait over 10 seconds and then switch it "ON" again, the light will revert to warm-up period again.

Troubleshooting

Symptom	Possible Cause	Solution
The light doesn't work in Test Mode	Wall switch or circuit breaker is off Wiring is faulty	Turn on the switch or circuit breaker. Inspect and secure wire connections.
In Dual-Bright Mode or ON/OFF Mode, the light fixture does not turn on when motion is detected	Wall switch or circuit breaker is off	Turn on the switch or circuit breaker.
	Light bulb may be burned out	Test the bulb in a known working fixture.
	Light bulb is loose in the socket	Tighten the bulb securely in the socket.
	Incorrect or loose wire connections	Inspect and secure wire connections.
	Excessive sunlight is hitting the Dusk-to-Dawn sensor in early evening	Relocate the fixture away from west-facing walls.
	Excessive light from another source (e.g., street lamp) is hitting the Dusk-to-Dawn sensor	Eliminate or turn off other light sources, block light from reaching the Dusk-to-Dawn sensor, or relocate the fixture.
In Dual-Bright Mode or ON/OFF Mode, the light stays at 100% brightness continuously	False triggering from a heat source (e.g., traffic, heater/dryer vents, AC vents, heated pools)	Eliminate the heat source or relocate the fixture.
The light turns on at 100% brightness for no apparent reason	False triggering from a heat source (e.g., traffic, heater/dryer vents, AC vents, heated pools)	Eliminate the heat source or relocate the fixture.
The light turns on during daytime or too early in the evening	The fixture is installed in a shaded area (e.g., under a porch/eave), preventing daylight from reaching the Dusk-to-Dawn sensor	Relocate the fixture to a sunlit area.
The LED/fluorescent bulb flickers when dimmed to standby level	A non-dimmable LED/fluorescent bulb is installed A small number of dimmable LED/fluorescent bulbs are incompatible	Replace with a dimmable LED/fluorescent bulb or an incandescent bulb. Press and hold the tact switch to adjust the low-level brightness and avoid the flicker point.
In Dual-Bright Mode, standby brightness is too close to full brightness	A small number of dimmable LED/fluorescent bulbs are incompatible	Press and hold the tact switch to lower the low-level brightness and increase contrast with full brightness.
In Manual Override Mode, the light stays on after dawn	Ambient light level is too low (sensor not detecting sufficient daylight)	Relocate the fixture to an area with more direct sunlight.

Warranty

This product is backed by a 12-month limited warranty. If you experience any issues during the warranty period, please contact our support team at support@4modernhome.com or by phone at 469-312-6428. To ensure a faster resolution, please include your order ID and a detailed description of the issue when reaching out.

Covered by Warranty

If the product fails under normal use and in accordance with the user manual, we will provide a replacement or full refund.

Not Covered by Warranty

This warranty does NOT apply to:

1. Damage or failure due to improper use, unauthorized repair, or modification
2. Damage from accidental drops or impacts
3. Damage caused by fire, earthquake, flood, lightning, or other natural disasters
4. Damage from use outside the product's intended purpose
5. Damage caused by third-party accessories or products

Made in China