# INSTALLATION INSTRUCTION

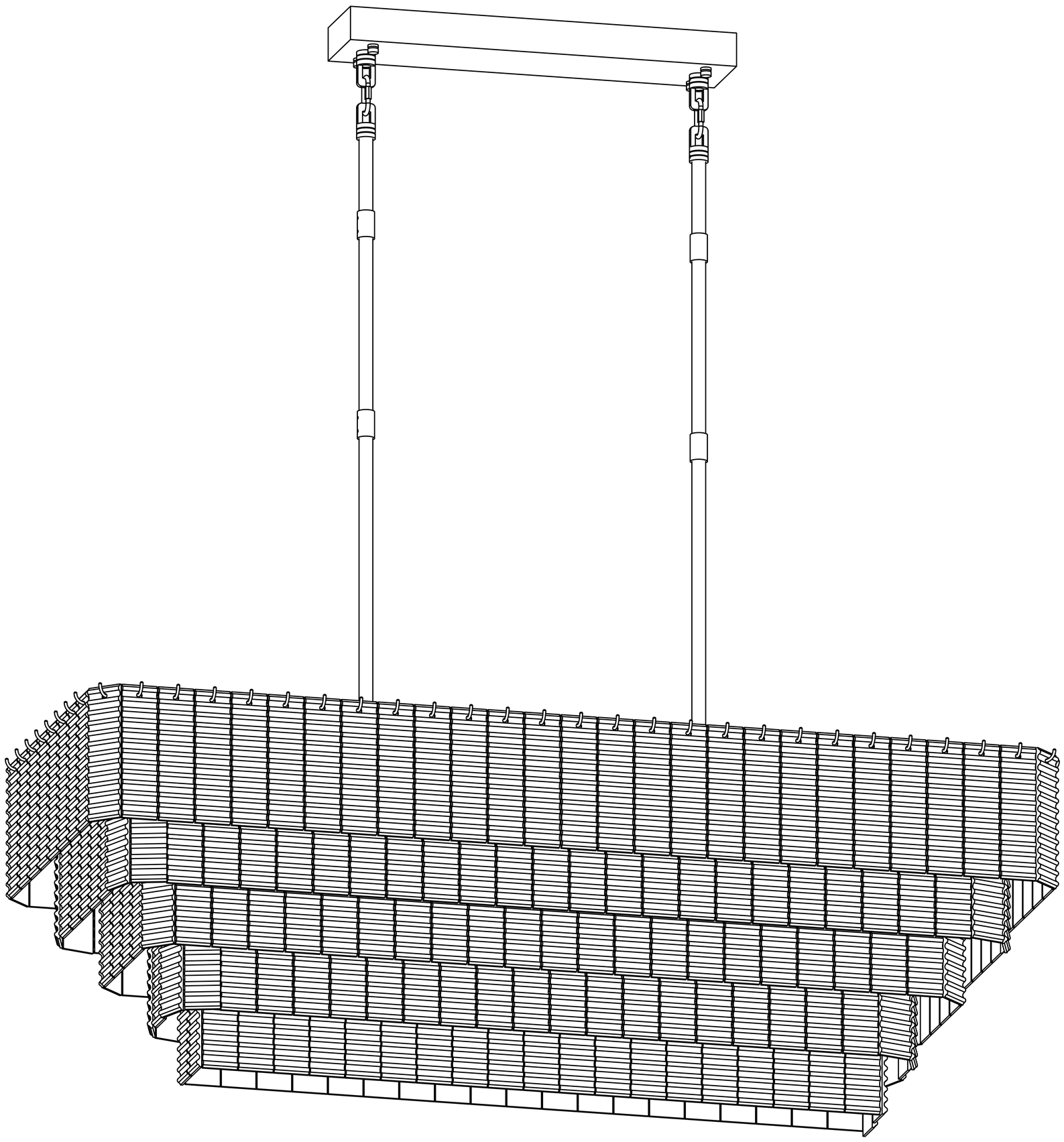

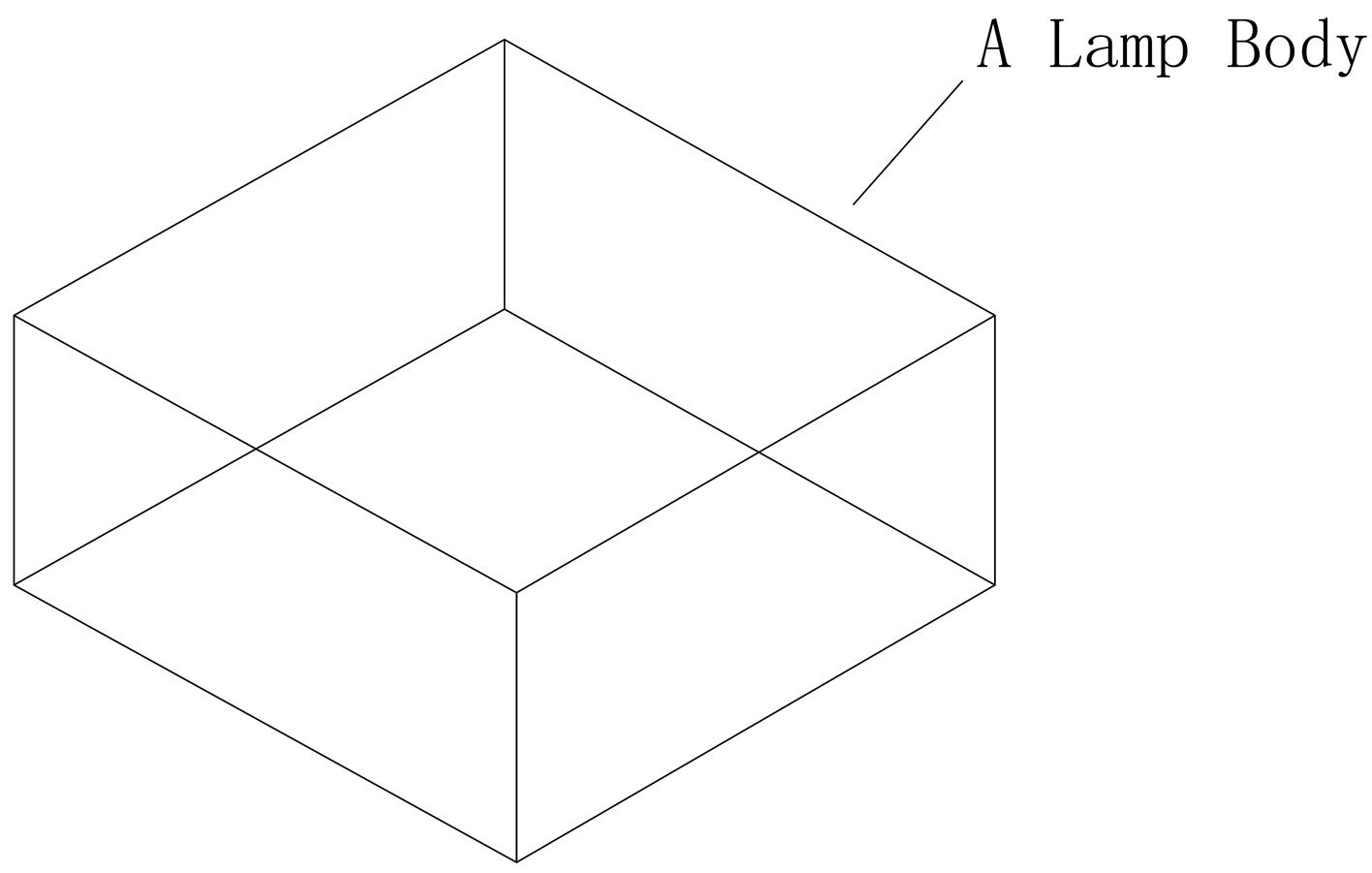


## SAFETY INFORMATION

It is important to thoroughly read and understand the entire manual, before assembling, operating.or installing the product.

## WARNING

- TURN OFF ELECTRICITY before installation, changing bulbs, or cleaning the light fixture.
- This fixture requires 11 piees E12 bulbs, the maximum watagefior each bulb is 40W, please do not exceed the recommended wattage.
- A QUALIFIED ELECTRICIAN IS RECOMMENDED FOR INSTALLATION.
- Do not use corrosive substances such as gasoline or alcohol disinfectants to wipe the lamps.otherwise it will damage the lamps.

## PREPARATION

- Before installation, please make sure all the accessories are included (refer to the package content), if there is any part missing, please contact us at the order page, we will arrange the replacement in a timely manner
- 11 pieces of E12 bulbs( Max. 40W) are required
- For any questions or inquires, please feel free to contact us at the order page, our customer service team will reply ASAP

# PACKAGE CONTENTS

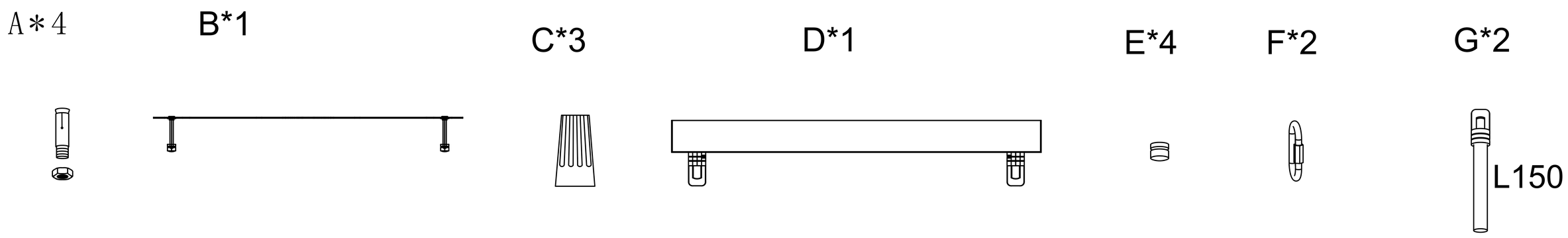


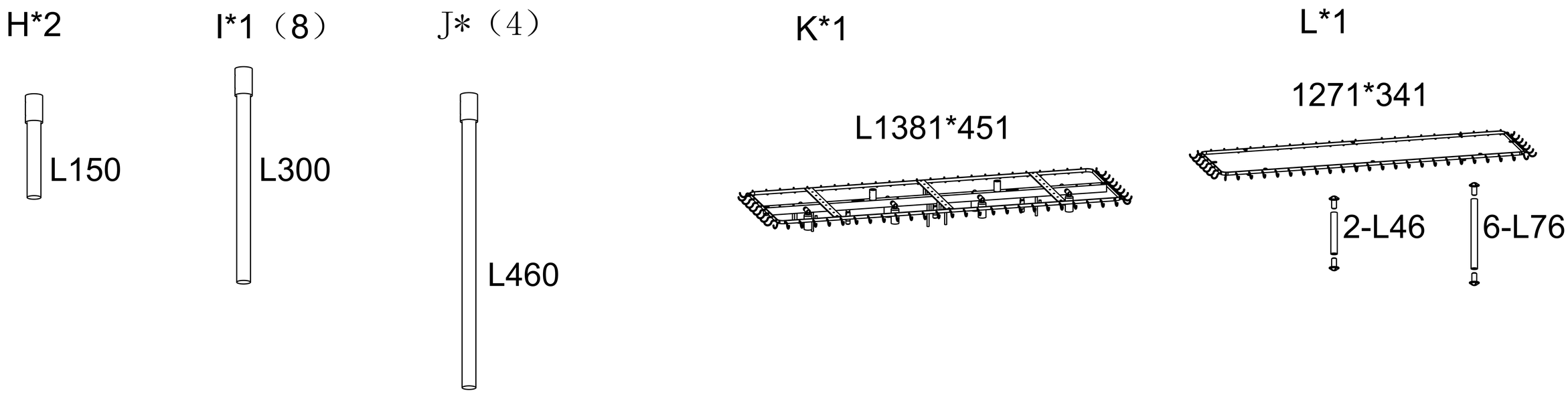


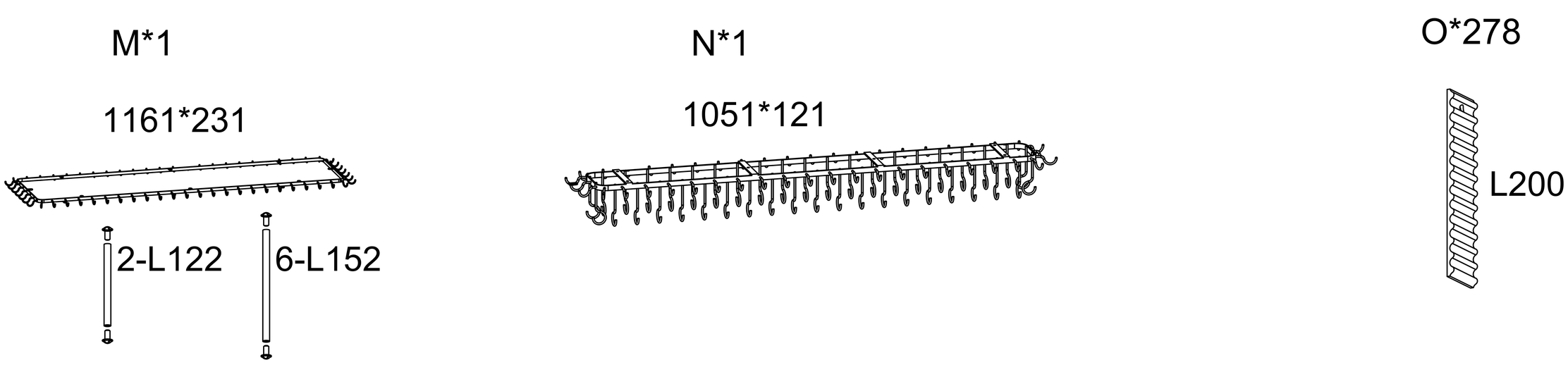


## Please note:

Please check the parts list, if the partsare missing during your actua installation, please contactus,
we will help you in time!

This manual only shows the installation steps for one size, and the installationmethods for other sizes of products are similar.
Now, let’s complete this light together.

Be patient.....

and fully utilize your artistic talentt.....

What awaits you after completion is incredible beauty!

# Installation instruction

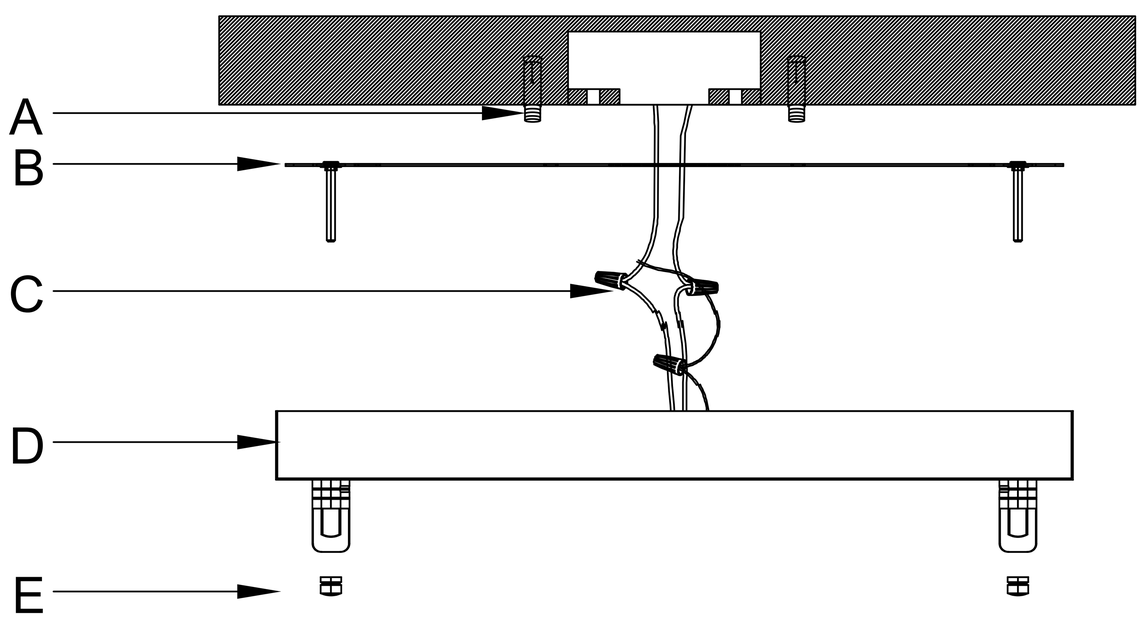


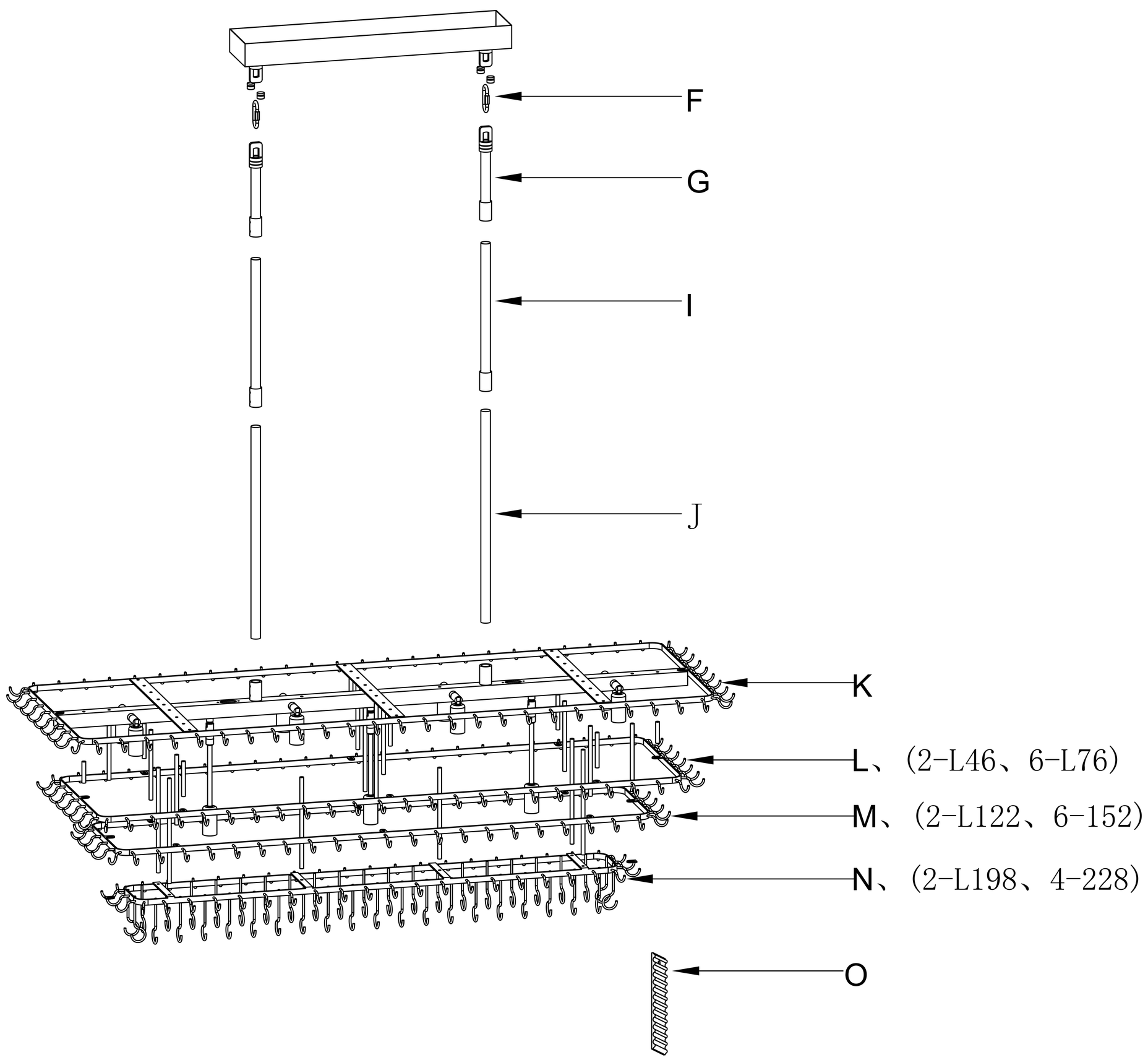

# Installation instruction

1.Adjust the length of hanging cable and wire according to your reguirement.
2.Take off the mounting bracket from ceiling canopy, and installit on ceiling.
3. Connect amp wires and your house wires together.
4. Install the lamp frame on ceiling.

## Step 1

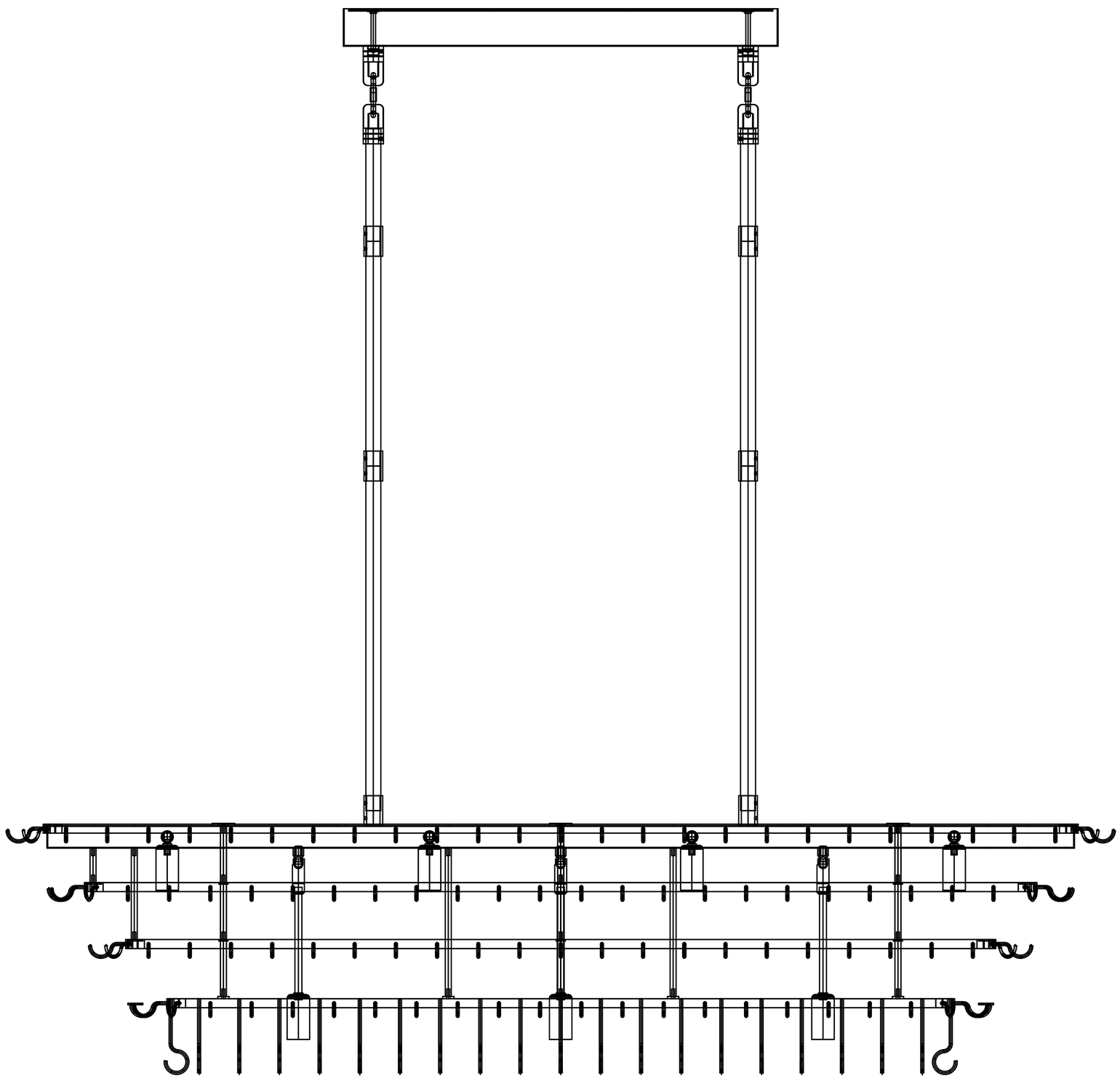

# Installation instruction

## Step 2

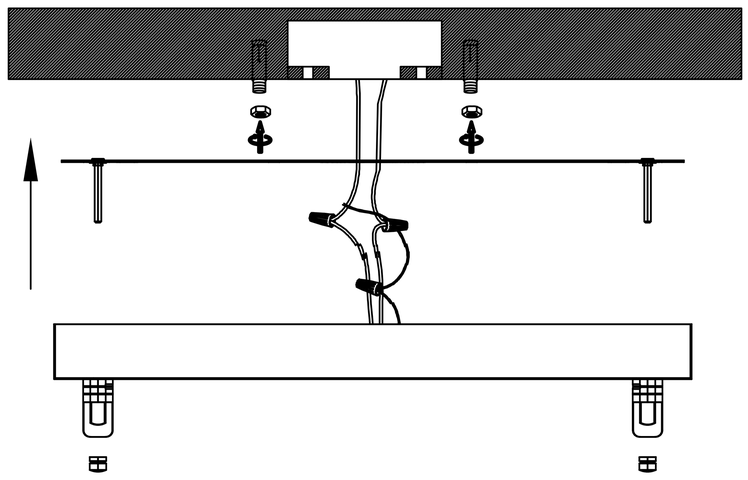

## Step 3

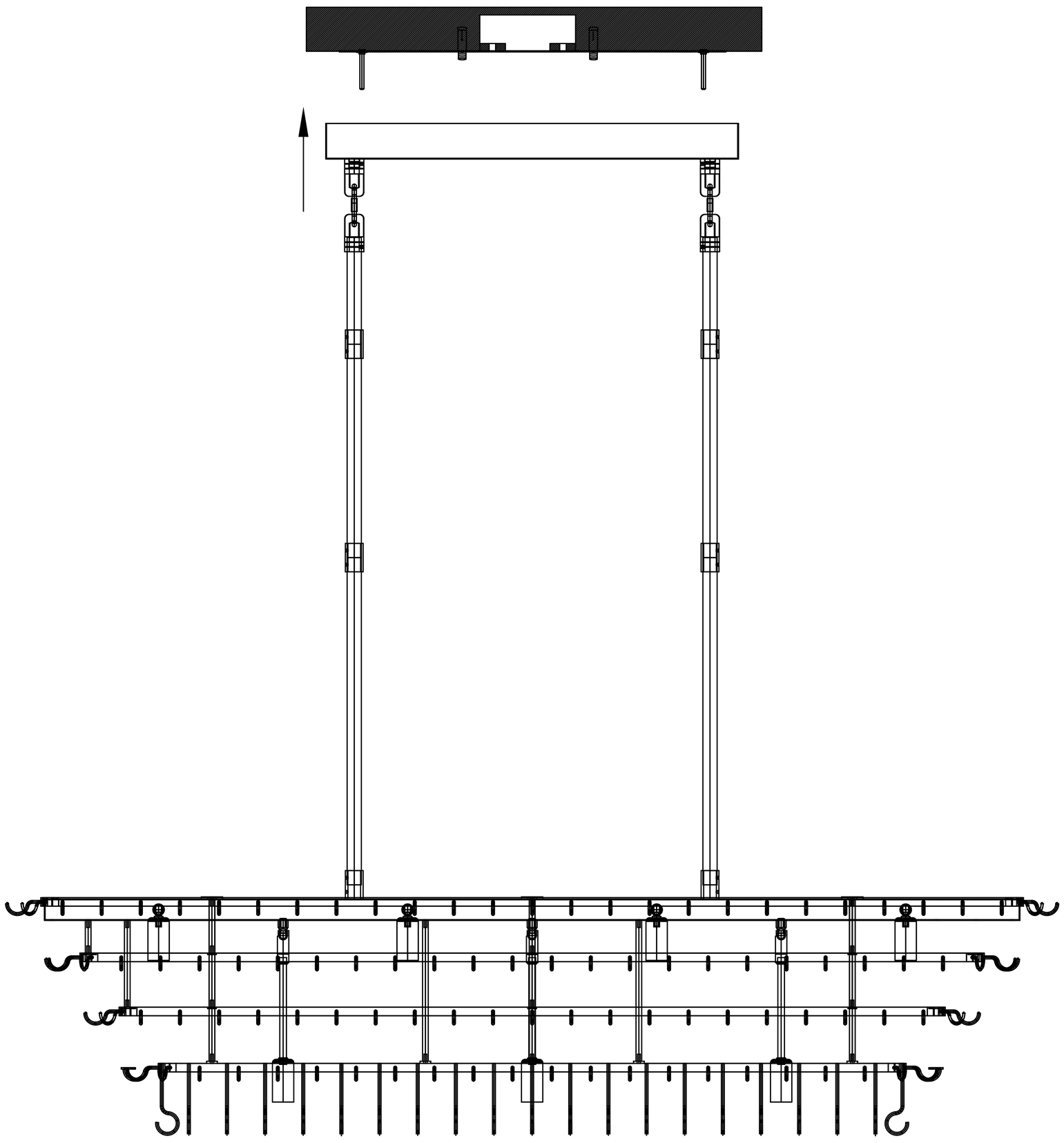

# Please note:

please check the parts list, if the partsare mising during your actua installation, plcase contactus.
we will help you in time!

# Step 4

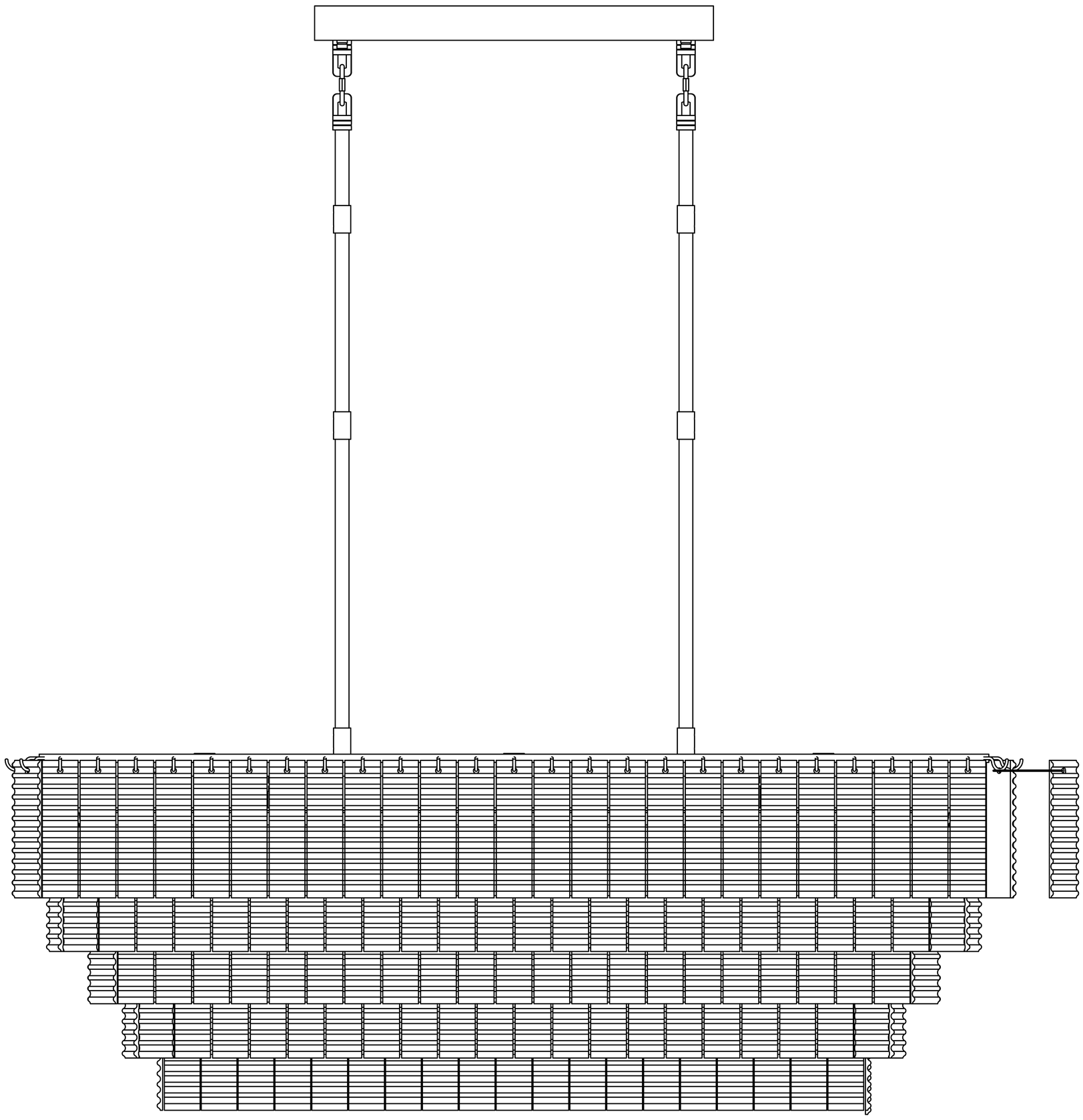

## Maintenance:

To ensure safe and efîicient use of this produet, please clean the lanp regularly (once a.mootb).Beiore cleaning, turn off the oower and walt tor lhe lamp to cool (o room lemperaure. Then use a soft cloth dipped in water and wrung dry to wipe it clean.

# Warranty

Our dedicated customer service team is available 24hours a day to assist you. If you haveany questions or concerns, we guarantee a response within 24 hours. During the warrantyperiod, if you encounter any problems or need assistance, please don’t hesitate to reach outto us via email. To ensure a swift and accurate resolution, kindly provide your order ID and detailed information regarding the issue.

Important Note: Please use this light fixture only for its intended purpose and avoid retrofitting or remodeling it.
The warranty does not cover failures caused by third-party products or natural disasters.